CAT.ES11-57 Ⓙ

SMC

High Capacity & Simple Choices

Series SY

5 Port Rubber Seal Solenoid Valve

Series SY 9000 newly released

CE Marking Compliant Products

The SY series complies with the EMC Directive and the Low Energy Directive based on approval by TÜV Rheinland, an EC Notified Body (EC authorization No. 0197).

When ordering CE marking compliant products, add "– Q" at the end of the standard part number.

How to order valves

SY□□□□□ – □□□□ – □ – □ – Q

- Enter the standard part number
- CE marking compliant product

How to order manifolds

SS5Y□ – □ – □ – □ – Q

- Enter the standard part number
- CE marking compliant product

Note) Contact SMC for details, as there are limitations on models, voltage specifications and electrical entry, etc.

Table of Contents

Features ..... Features 1, 2
Cylinder Speed Chart ..... Features 3
Valve Variations ..... Features 4
Manifold Variations ..... Features 5, 6

Body Ported

Single Valve P. 1 to 18

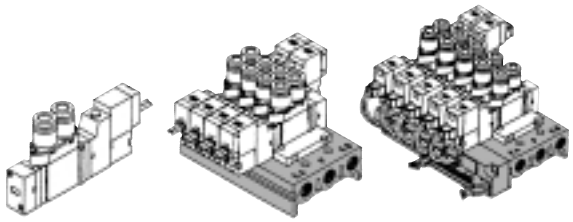
Single valve Bar stock manifold

Bar Stock Manifold/Individual Wiring P. 37 to 42

Stacking Manifold/Individual Wiring P. 43 to 46

Bar Stock Manifold/Flat Ribbon Cable P. 47 to 52

Stacking Manifold/Flat Ribbon Cable P. 53 to 58

Base Mounted

Single Valve P. 19 to 36

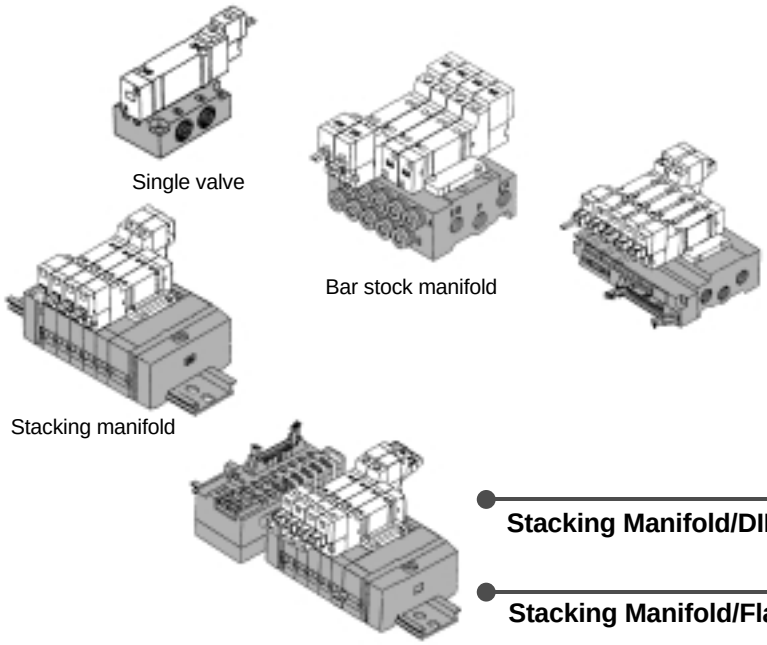
Single valve
Bar stock manifold
Stacking manifold

Bar Stock Manifold/Individual Wiring P. 59 to 68

Stacking Manifold/Individual Wiring P. 69 to 74

Bar Stock Manifold/Flat Ribbon Cable P. 75 to 82

Stacking Manifold/DIN Rail/Individual Wiring P. 83 to 94

Stacking Manifold/Flat Ribbon Cable P. 95 to 105

Stacking Manifold/DIN Rail/Connector Box P. 106 to 114

Stacking Manifold/DIN Rail/Plug-in Valve P. 115 to 156

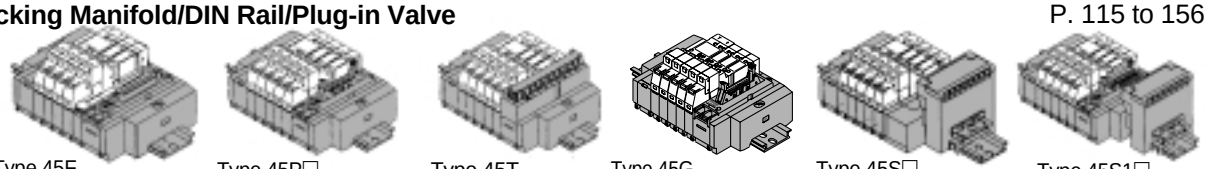
Type 45F D-sub connector
Type 45P□ Flat ribbon cable
Type 45T Terminal block
Type 45G Flat ribbon cable for PC wiring system
Type 45S□ Serial transmission
Type 45S1□ Serial transmission (separate type)

SY300/500 3 Port Valves P. 157 to 161

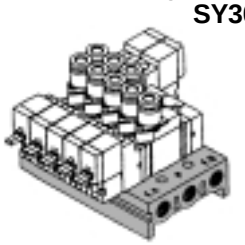

5 Port/Air Operated Valves SYA3000/5000/7000 P. 162 to 176

Order Made P. 177 to 190
- Type 45S2/serial type with SMC IN313
- Type 45S3/serial type with OMRON G71-OD16
- External pilot and built-in silencer
- Mixed mounting type
- DIN connector (DIN43650C standard)
- Body ported type with external pilot
- Main valve fluoro rubber specification
- Energy saving solenoid valve

Manifold Specification Sheets P. 191 to 229

3/5 Port Solenoid Valve Precautions P. 230 to 232
Specific Product Precautions P. 233 to 238

Features | Single valve | Type 20 | Type 23 | Type 20P | Type 23P | Single valve | Type 41 | Type 42 | Type 43 | Type 41P | Type 42P | Type 43P | Type 45 | Type 45-A/NA | Type 45□ | 3 port valve | Air operated | Order made | Manifold spec. sheets | Precautions

High Capacity & Simple Choices

5 Port Solenoid Valves

SY3000/5000/7000/9000

Low power consumption: 0.5W

(Current value: 21mA at 24VDC)

Low power consumption enables direct operation by a PLC, and cost savings are realized through the use of a smaller power supply and switching elements and the elimination of relay cards.

[An energy saving type [0.22W] is also available. Refer to page 190 for details.]

Compact design with high flow capacity of 1.7 to 3 times the Cv factor with the same body width

The same size cylinder can be driven with a valve one physical size smaller than a conventional type, contributing greatly to both space and cost savings.

Valves to drive cylinders of sizes ø6 to ø200 — Pressure: 0.5MPa, Load factor: 50%

Base mounted (sub-plate)	Cv	Cylinder speed mm/s	Cylinder bore size mm																
			Series CJ2			Series CM2				Series MB/CA1					Series CS1				
			ø6	ø10	ø16	ø20	ø25	ø32	ø40	ø40	ø50	ø63	ø80	ø100	ø125	ø140	ø160	ø180	ø200
SY3000	0.3	150	■	■	■	■	■	■	■	■	■								
		300	■	■	■	■	■	■	■	■									
		450	■	■	■	■	■	■											
		600	■	■	■	■	■												
		750	■	■		■	■												
SY5000	0.7	150	■	■	■	■	■	■	■	■	■	■	■						
		300	■	■	■	■	■	■	■	■	■								
		450	■	■	■	■	■	■	■	■									
		600	■	■	■	■	■	■	■	■									
		750	■	■		■	■	■											
SY7000	1.2	150	■	■	■	■	■	■	■	■	■	■	■	■	✻	✻			
		300	■	■	■	■	■	■	■	■	■		✻	✻					
		450	■	■	■	■	■	■	■	■	■	✻	✻						
		600	■	■	■	■	■	■	■	■	■	✻							
		750	■	■		■	■	■	■	■	✻	✻							
SY9000	2.8	150	■	■	■	■	■	■	■	■	■	■	■	■	■	■	✻	✻	✻
		300	■	■	■	■	■	■	■	■	■	■	■	✻	✻	✻			
		450	■	■	■	■	■	■	■	■	■	■	✻	✻					
		600	■	■	■	■	■	■	■	■	■	✻	✻	✻					
		750	■	■		■	■	■	■	■	■	✻	✻						

The speed of CJ2 and CM2 cylinders is controlled by a fixed orifice built into the cylinder.
∗ Cylinder speeds are for extension of the cylinder.
∗ The "✻" symbol indicates conditions with SGP (steel piping).

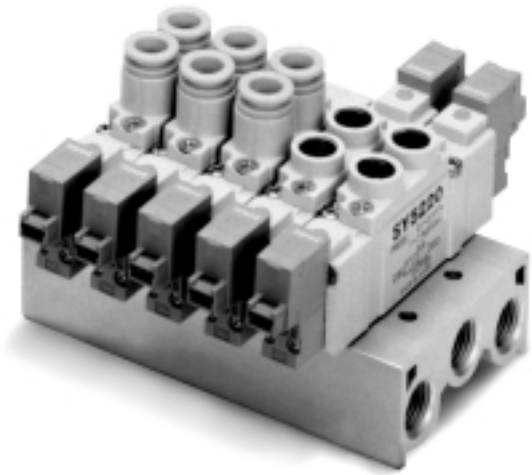

Long life exceeding 50 million cycles

(Based on SMC life test conditions.)

Long life is achieved by a new pilot design, guide rings that prevent main valve eccentricity, and a stronger return force.

New

- **5 port solenoid valve series SY9000**
  Cv 2.8 (base mounted type with sub-plate)
- **Interface regulator series ARBY3000/5000**
  (for series SY3000/5000)

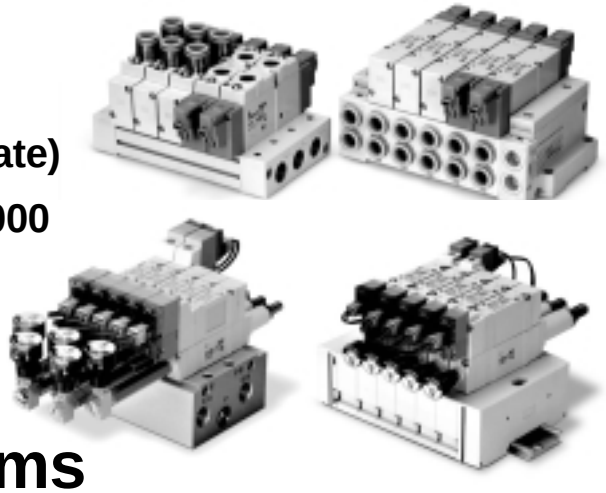

High speed response: 10ms

(SY3000 single solenoid, 0.5MPa, 20°C) (representative value)

The innovative design of the pilot valve makes it possible to achieve a short response time of 10ms while consuming only a half watt of power.

Exhaust mist and noise from the pilot valve are eliminated.

<Common exhaust construction for main/pilot valves>

This feature provides for a cleaner and quieter operating environment by exhausting the pilot air through the main valve body rather than directly to the atmosphere.

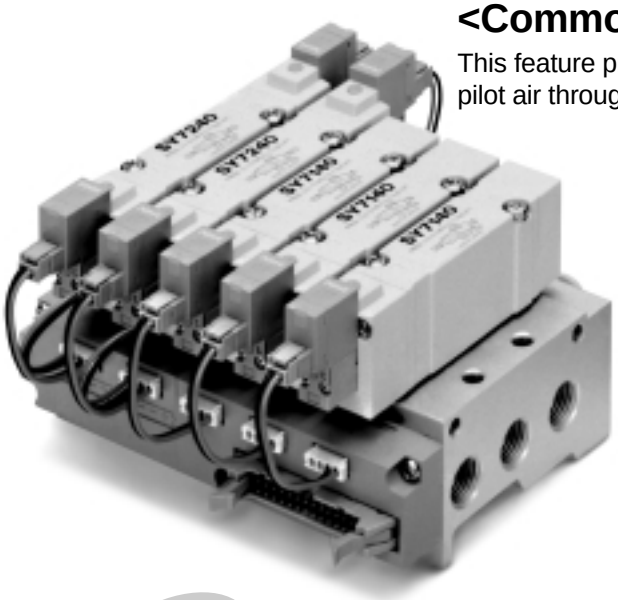

Interchangeable cylinder port sizes

<Body ported type>

	Interchangeable port sizes				
SY3000	C4		C6		M5
SY5000	C4	C6	C8		Rc1/8
SY7000	C8		C10		Rc1/4
SY9000	C8	C10	C12	Rc1/4	Rc3/8

C# = Tube fitting cartridge size

- **For SY5000**

[SY5000-6A-01] **[SY5000-6A-C6]**

Outstanding seal performance

Special rubber seals in the main valve offer improved durability and performance, greatly reducing valve failures under a wide range of operating conditions.

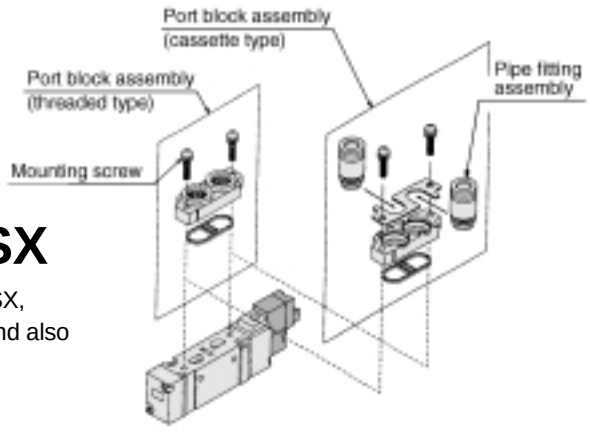

Same valve footprint as series SX

The non-plug-in type manifold base and sub-plate are common with series SX, making it possible to mount both series SX and SY on the same manifold, and also reducing base inventory when both series are being used.

Clean aesthetics and state-of-the-art design

Bright white colors and a clean design have been adopted to complement high-tech operating environments.

Values presented in this catalog are for reference and are not guaranteed.

Cylinder Speed Chart

∗ Values in the chart below are for reference. Confirm the actual conditions with the SMC sizing program.

Body ported type

Series	Cylinder speed mm/s	Cylinder bore size mm														
		Series CJ2 Pressure 0.5MPa Load factor 50% Cylinder stroke 60mm			Series CM2 Pressure 0.5MPa Load factor 50% Cylinder stroke 300mm				Series MB/CA1 Pressure 0.5MPa Load factor 50% Cylinder stroke 500mm					Series CS1 Pressure 0.5MPa Load factor 50/% Cylinder stroke 1000mm		
		ø6	ø10	ø16	ø20	ø25	ø32	ø40	ø40	ø50	ø63	ø80	ø100	ø125	ø140	ø160
SY3120 -C6 Cv = 0.23	150	■	■	■	■	■	■	■	■	■						
	300	■	■	■	■	■	■									
	450	■	■	■	■	■										
	600	■	■	■	■	■										
	750	■	■		■											
SY5120 -01 Cv = 0.59	150	■	■	■	■	■	■	■	■	■	■	■				
	300	■	■	■		■	■	■	■	■						
	450	■	■	■	■	■	■	■	■							
	600	■	■	■	■	■	■	■	■							
	750	■	■		■	■	■									
SY7120 -02 Cv = 0.87	150	■	■	■	■	■	■	■	■	■	■	■	■			
	300	■	■	■	■	■	■	■	■	■	■					
	450	■	■	■	■	■	■	■	■	■						
	600	■	■	■	■	■	■	■	■	■						
	750	■	■		■	■	■	■	■							
SY9120 -03 Cv = 2.1	150	■	■	■	■	■	■	■	■	■	■	■	■	■	✻	✻
	300	■	■	■	■	■	■	■	■	■	■	■	✻			
	450	■	■	■	■	■	■	■	■	■	■	✻				
	600	■	■	■	■	■	■	■	■	■	✻	✻				
	750	■	■		■	■	■	■	■	■	✻					

The speed of CJ2 and CM2 cylinders is controlled by a fixed orifice built into the cylinder.
∗ Cylinder speeds are for extension of the cylinder.
∗ The "✻" symbol indicates conditions with SGP (steel piping).

Base mounted type (with sub-plate)

Series	Cylinder speed mm/s	Cylinder bore size mm																
		Series CJ2 Pressure 0.5MPa Load factor 50% Cylinder stroke 60mm			Series CM2 Pressure 0.5MPa Load factor 50% Cylinder stroke 300mm				Series MB/CA1 Pressure 0.5MPa Load factor 50% Cylinder stroke 500mm					Series CS1 Pressure 0.5MPa Load factor 50% Cylinder stroke 1000mm				
		ø6	ø10	ø16	ø20	ø25	ø32	ø40	ø40	ø50	ø63	ø80	ø100	ø125	ø140	ø160	ø180	ø200
SY3140 -01 Cv = 0.3	150	■	■	■	■	■	■	■	■	■								
	300	■	■	■	■	■	■											
	450	■	■	■	■	■												
	600	■	■	■	■	■												
	750	■	■		■	■												
SY5140 -02 Cv=0.7	150	■	■	■	■	■	■	■	■	■	■	■						
	300	■	■	■	■	■	■	■	■	■								
	450	■	■	■	■	■	■	■	■									
	600	■	■	■	■	■	■	■	■									
	750	■	■		■	■	■											
SY7140 -03 Cv = 1.2	150	■	■	■	■	■	■	■	■	■	■	■	■	✻	✻			
	300	■	■	■	■	■	■	■	■	■	■	✻	✻					
	450	■	■	■	■	■	■	■	■	■	✻	✻						
	600	■	■	■	■	■	■	■	■	■	✻							
	750	■	■		■	■	■	■	■	✻	✻							
SY9140 -04 Cv = 2.8	150	■	■	■	■	■	■	■	■	■	■	■	■	■	■	✻	✻	✻
	300	■	■	■	■	■	■	■	■	■	■	■	✻	✻	✻			
	450	■	■	■	■	■	■	■	■	■	■	✻	✻					
	600	■	■	■	■	■	■	■	■	■	✻	✻	✻					
	750	■	■		■	■	■	■	■	■	✻	✻						

The speed of CJ2 and CM2 cylinders is controlled by a fixed orifice built into the cylinder.
∗ Cylinder speeds are for extension of the cylinder.
∗ The "✻" symbol indicates conditions with SGP (steel piping).

Conditions

Body ported type		Series CJ2	Series CM2	Series MB/CA1	Series CS1
SY3120 -C6 (Cv = 0.23)	Tube bore x Length	ø6 x 1m			—
	Speed controller	AS2051F-06 (S = 0.25)			—
	Silencer	AN120-M5 (Cv = 0.27)			—
SY5120 -01 (Cv = 0.59)	Tube bore x Length	ø6 x 1m	ø8 x 1m		—
	Speed controller	AS3001F-06 (Cv = 0.36)	AS3001F-08 (Cv = 0.56)		—
	Silencer	AN101-01 (Cv = 1.11)			—
SY7120 -02 (Cv = 0.87)	Tube bore x Length	ø6 x 1m	ø10 x 1m		—
	Speed controller	AS3001F-06 (Cv = 0.36)	AS4001F-10 (Cv = 0.89)		—
	Silencer	AN110-01 (Cv = 1.94)			—
SY9120 -03 (Cv = 2.1)	Tube bore x Length	ø6 x 1m	ø10 x 1m	ø12 x 1m	
	Speed controller	AS3001F-06 (Cv = 0.36)	AS4001F-10 (Cv = 0.89)	AS4001F-12 (Cv = 1.17)	
	Silencer	AN200-02 (Cv = 1.94)			

Conditions [with SGP (steel tube)]

Body ported type		Series CS1
SY9120 -03 (Cv = 2.1)	Steel tube size x Length	SGP3/8 x 1m
	Speed controller	AS420-03 (Cv = 4.11)
	Silencer	AN400-04 (Cv = 5)

Conditions

Base mounted type		Series CJ2	Series CM2	Series MB/CA1	Series CS1
SY3140 -01 (Cv = 0.3)	Tube bore x Length	ø6 x 1m			—
	Speed controller	AS3001F-06 (S = 0.36)			—
	Silencer	AN110-01 (Cv = 1.94)			—
SY5140 -02 (Cv = 0.7)	Tube bore x Length	ø6 x 1m	ø8 x 1m		—
	Speed controller	AS3001F-06 (Cv = 0.36)	AS3001F-08 (Cv = 0.56)		—
	Silencer	AN110-01 (Cv = 1.94)			—
SY7140 -03 (Cv = 1.2)	Tube bore x Length	ø6 x 1m	ø10 x 1m	ø12 x 1m	
	Speed controller	AS3001F-06 (Cv = 0.36)	AS3001F-08 (Cv = 0.56)	AS4001F-10 (Cv = 1.17)	
	Silencer	AN200-02 (Cv = 1.94)			
SY9140 -04 (Cv = 2.8)	Tube bore x Length	ø6 x 1m	ø10 x 1m	ø12 x 1m	
	Speed controller	AS3001F-06 (Cv = 0.36)	AS4001F-10 (Cv = 0.89)	AS4001F-12 (Cv = 1.17)	
	Silencer	AN200-02 (Cv = 1.94)			

Conditions [with SGP (steel tube)]

Base mounted type		Series MB/CA1	Series CS1
SY7140 -03 (Cv = 1.2)	Steel tube size x Length	SGP3/8 x 1m	
	Speed controller	AS420-03 (Cv = 4.11)	
	Silencer	AN300-03 (Cv = 3.67)	
SY9140 -04 (Cv = 2.8)	Steel tube size x Length	SGP1/2 x 1m	
	Speed controller	AS420-04 (Cv = 5)	
	Silencer	AN400-04 (Cv = 5)	

Valve Variations

Series			Effective area mm² (Cv factor)	Type of actuation: 2 position: Single	Type of actuation: 2 position: Double	Type of actuation: 3 position: Closed center	Type of actuation: 3 position: Exhaust center	Type of actuation: 3 position: Pressure center	Voltage: DC 24V, 12V, 6V, 5V, 3V	Voltage: AC 100V 50/60Hz, 110V 50/60Hz, 200V 50/60Hz, 220V 50/60Hz	Electrical entry: Grommet	Electrical entry: L type plug connector	Electrical entry: M type plug connector	Electrical entry: DIN terminal	Note 1) Indicator light/Surge voltage suppressor
Body ported type	Page 1 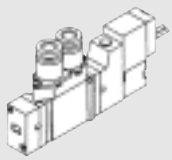	SY3□20	4.14 (0.23)	●	●	●	●	●	●	●	●	●	●	—	●
		SY5□20	10.6 (0.59)	●	●	●	●	●	●	●	●	●	●	●	●
		SY7□20	16.2 (0.9)	●	●	●	●	●	●	●	●	●	●	●	●
		SY9□20	38.23 (2.12)	●	●	●	●	●	●	●	●	●	●	●	●
Base mounted type	Page 19 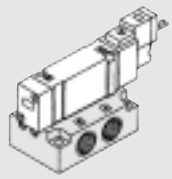	SY3□40	5.4 (0.3)	●	●	●	●	●	●	●	●	●	●	—	●
		SY5□40	12.6 (0.7)	●	●	●	●	●	●	●	●	●	●	●	●
		SY7□40	21.6 (1.2)	●	●	●	●	●	●	●	●	●	●	●	●
		SY9□40	51.71 (2.87)	●	●	●	●	●	●	●	●	●	●	●	●

Series		Manual override: Non-locking push type	Manual override: Push-turn locking slotted type	Manual override: Push-turn locking lever type	Bracket	P, EA, EB port size: M5	P, EA, EB port size: Rc 1/8	P, EA, EB port size: Rc 1/4	P, EA, EB port size: Rc 3/8	P, EA, EB port size: Rc 1/2	A, B port size: M5	A, B port size: Rc 1/8	A, B port size: Rc 1/4	A, B port size: Rc 3/8	A, B port size: Rc 1/2	A, B port size: One-touch fitting: C4	A, B port size: One-touch fitting: C6	A, B port size: One-touch fitting: C8	A, B port size: One-touch fitting: C10	A, B port size: One-touch fitting: C12	Options: Exhaust throttle	Options: Oil resistant (except turbine oil)	Options: Vacuum specification	Options: Low pressure specification	Options: Reverse pressure	Options: IP65 enclosure Note 3)	Options: Interface regulator
Body ported type	SY3□20	●	●	●	●	●	—	—	—	—	●	—	—	—	—	●	●	—	—	—	●	▲	▲ External pilot Note 2)	▲ External pilot Note 2)	▲ External pilot Note 2)	● DIN terminal	—
	SY5□20	●	●	●	●	—	●	—	—	—	—	●	—	—	—	●	●	●	—	—							
	SY7□20	●	●	●	●	—	● (EA, EB)	● (P)	—	—	—	—	●	—	—	—	—	●	●	—							
	SY9□20	●	●	●	—	—	—	●	—	—	—	—	●	●	—	—	—	●	●	●							
Base mounted type	SY3□40	●	●	●	—	—	●	—	—	—	—	●	—	—	—	—	—	—	—	—	● Sub-plate	▲	● External pilot	● External pilot	● External pilot	● DIN terminal	●
	SY5□40	●	●	●	—	—	—	●	—	—	—	—	●	—	—	—	—	—	—	—							
	SY7□40	●	●	●	—	—	—	●	●	—	—	—	●	●	—	—	—	—	—	—							—
	SY9□40	●	●	●	—	—	—	—	●	●	—	—	—	●	●	—	—	—	—	—							

Note 1) All AC voltages have built-in surge voltage suppressor as standard.
Note 2) Body ported external pilot type (order made product) is not available for DIN terminal type.
Note 3) Only available for DIN terminal type.

Manifold Variations

	Manifold variations		Valve series 5 port	Wiring: Connection: Individual wiring	Flat ribbon cable (26 pins)	Connector box (Flat ribbon cable 20 pins)	D-sub connector (25 pins) <Plug-in type>	Flat ribbon cable (26, 20, 10 pins) <Plug-in type>	Terminal block (9, 18 pins) <Plug-in type>	PC wiring	Serial transmission unit	Common specifications: Positive COM	Negative COM
Body ported type	**Bar stock type** **Individual wiring** ■ Direct piping to the main unit of valve. Combination of different fittings is possible.	Type 20 Page 37	SY3□20 SY5□20 SY7□20	●	—	—	—	—	—	—	—	—	—
Body ported type	**Bar stock type** **Flat ribbon cable** ■ A 26 pin MIL connector permits one-touch wiring of external cables in a bundle.	Type 20P Page 47	SY3□20 SY5□20 SY7□20	—	●	—	—	—	—	—	—	● Common	
Body ported type	**Stacking type** **Individual wiring** ■ Addition/Removal of manifold stations is possible.	Type 23 Page 43	SY9□20	●	—	—	—	—	—	—	—	—	—
Body ported type	**Stacking type** **Flat ribbon cable** ■ Addition/Removal of manifold stations is possible.	Type 23P Page 53	SY9□20	—	●	—	—	—	—	—	—	● Common	
Base mounted type	**Compact bar stock type** **Individual wiring** ■ The base mounting facilitates maintenance when valves are changed.	Type 41 Page 59	SY3□40 SY5□40	●	—	—	—	—	—	—	—	—	—
Base mounted type	**Compact bar stock type** **Flat ribbon cable** ■ A 26 pin MIL connector permits one-touch wiring of external cables in a bundle.	Type 41P Page 75	SY3□40 SY5□40	—	●	—	—	—	—	—	—	● Common	
Base mounted type	**Bar stock type/Common external pilot** **Individual wiring** ■ The base mounting facilitates maintenance when valves are changed. ■ Vacuum/low pressure combination system is possible.	Type 42 Page 59	SY3□40 SY5□40 SY7□40	●	—	—	—	—	—	—	—	—	—
Base mounted type	**Bar stock type/Common external pilot** **Flat ribbon cable** ■ A 26 pin MIL connector permits one-touch wiring of external cables in a bundle. ■ Vacuum/low pressure combination system is possible.	Type 42P Page 75	SY3□40 SY5□40 SY7□40	—	●	—	—	—	—	—	—	● Common	
Base mounted type	**Stacking type** **Individual wiring** ■ Addition/Removal of manifold stations is possible.	Type 43 Page 69	SY9□40	●	—	—	—	—	—	—	—	—	—
Base mounted type	**Stacking type** **Flat ribbon cable** ■ Addition/Removal of manifold stations is possible.	Type 43P Page 83	SY9□40	—	●	—	—	—	—	—	—	● Common	
Base mounted type	**Stacking type/DIN rail** **Individual wiring** ■ Stations can be changed on the DIN rail. Integral mounting of other parts is possible.	Type 45 Page 95	SY3□40 SY5□40	●	—	—	—	—	—	—	—	—	—
Base mounted type	**Stacking type/DIN rail** **Connector box** ■ Stations can be changed on the DIN rail. The provided connector box permits one-touch connection of electric cables.	Type 45-A/NA Page 106	SY3□40 SY5□40	—	—	●	—	—	—	●	—	●	●
Base mounted type	**Stacking type/DIN rail** **Plug-in type** ■ Stations can be changed on the DIN rail. ■ A variety of centralized wiring methods are possible.	Type 45□ Page 115	SY3□40 SY5□40	—	—	—	●	●	●	●	●	●	●

● Standard ◐ Option
▲ Order made (See "Order Made Specifications" pages.)

Manifold Variations

Manifold options								A, B port size									Valve options										
Blanking plate	Individual SUP spacer	Individual EXH spacer	SUP Block disc	EXH Block disc	Labels for block disc	Silencer with One-touch fitting	Built-in silencer	M5	Rc 1/8	Rc 1/4	Rc 3/8	One-touch fitting					SY3000, SY5000 Mixed mounting	Oil resistant (except specified turbine oil)	Vacuum specification	Low pressure specification	Different pressure	Reverse pressure	Exhaust throttle	Bundled wiring	Mixed fitting sizes	IP65 enclosure	Interface regulator
												C4	C6	C8	C10	C12											
●	●	●	—	—	—	—	—	●	—	—	—	●	●	—	—	—	—	▲	—	—	● Individual SUP spacer	—	● Individual EXH spacer	—	—	—	—
								—	●	—	—	●	●	●	—	—										● Note)	
								—	—	●	—	—	—	●	●	—										● Note)	
●	●	●	—	—	—	—	—	●	—	—	—	●	●	—	—	—	—	▲	—	—	● Individual SUP spacer	—	● Individual EXH spacer	●	—	—	—
								—	●	—	—	●	●	●	—	—											
								—	—	●	—	—	—	●	●	—											
●	●	●	●	●	●	—	—	—	—	●	●	—	—	●	●	●	—	▲	● External pilot	● External pilot	● Individual SUP block disc	● External pilot	● Individual EXH	—	—	● Note)	—
●	●	●	●	●	●	—	—	—	—	●	●	—	—	●	●	●	—	▲	● External pilot	● External pilot	● Individual SUP block disc	● External pilot	● Individual EXH	●	—	—	
●	●	●	—	—	—	—	—	●	—	—	—	●	●	—	—	—	—	▲	—	—	● Individual SUP spacer	—	—	—	—	—	●
								—	●	—	—	—	●	●	—	—										● Note)	
●	●	●	—	—	—	—	—	●	—	—	—	●	●	—	—	—	—	▲	—	—	● Individual SUP spacer	—	—	●	—	—	●
								—	●	—	—	—	●	●	—	—											
●	●	●	—	—	—	—	—	—	●	—	—	●	●	—	—	—	—	▲	● External pilot	● External pilot	● Individual SUP spacer	● External pilot	—	—	—	—	●
								—	—	●	—	—	●	●	—	—										● Note)	
								—	—	●	—	—	—	—	●	—										● Note)	—
●	●	●	—	—	—	—	—	—	●	—	—	●	●	—	—	—	—	▲	● External pilot	● External pilot	● Individual SUP spacer	● External pilot	—	●	—	—	●
								—	—	●	—	—	●	●	—	—											
								—	—	●	—	—	—	—	●	—											—
●	●	●	●	●	●	●	●	—	—	●	●	—	—	●	●	●	—	▲	● External pilot	● External pilot	● Individual SUP block disc	● External pilot	● Individual EXH	—	●	● Note)	—
●	●	●	●	●	●	●	●	—	—	●	●	—	—	●	●	●	—	▲	● External pilot	● External pilot	● Individual SUP block disc	● External pilot	● Individual EXH	●	●	—	
●	●	●	●	●	●	●	▲	—	—	—	—	●	●	—	—	—	▲	▲	▲ External pilot	▲ External pilot	● Individual SUP spacer or block disc	—	—	—	●	—	●
								—	—	—	—	●	●	●	—	—										● Note)	
●	●	●	●	●	●	●	▲	—	—	—	—	●	●	—	—	—	▲	▲	▲ External pilot	▲ External pilot	● Individual SUP spacer or block disc	—	—	●	●	—	●
								—	—	—	—	●	●	●	—	—											
●	●	●	●	●	●	●	▲	—	—	—	—	●	●	—	—	—	▲	▲	▲ External pilot	▲ External pilot	● Individual SUP spacer or block disc	—	—	●	●	—	—
								—	—	—	—	●	●	●	—	—											

Note) When using DIN terminal.

SY3000/5000/7000/9000
Body Ported Type
Single Valve

CAD

How to Order

SY 5 1 20 — 5 L □ □ — 01 — □

Series

3	SY3000
5	SY5000
7	SY7000
9	SY9000

Type of actuation

1	2 position single 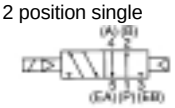
2	2 position double 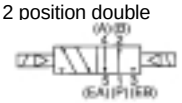
3	3 position closed center 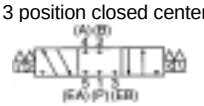
4	3 position exhaust center
5	3 position pressure center

Rated voltage

DC specifications

5	24VDC
6	12VDC
V	6VDC
S	5VDC
R	3VDC

AC specifications (50/60Hz)

1	100VAC
2	200VAC
3	110VAC [115VAC]
4	220VAC [230VAC]

Note 1) DC specifications for "D" and "DO" are only available in 24VDC and 12VDC.
Note 2) "D" and "DO" are not available for SY3000.

A/B port size

Symbol	Port size	Applicable series
M5	M5 x 0.8	SY3000
C4	ø4 One-touch fitting	
C6	ø6 One-touch fitting	
01	Rc 1/8	SY5000
C4	ø4 One-touch fitting	
C6	ø6 One-touch fitting	
C8	ø8 One-touch fitting	
02	Rc 1/4	SY7000
C8	ø8 One-touch fitting	
C10	ø10 One-touch fitting	
02	Rc 1/4	SY9000
03	Rc 3/8	
C8	ø8 One-touch fitting	
C10	ø10 One-touch fitting	
C12	ø12 One-touch fitting	

Bracket

Nil: Without bracket
F1: With foot bracket

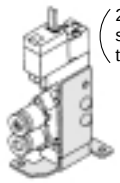

2 position single type only

F2: With side bracket

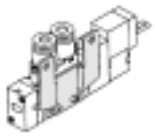

∗ SY9000 does not use brackets.

Manual override

Nil: Non-locking push type	**D:** Push-turn locking slotted type	**E:** Push-turn locking lever

Indicator light/Surge voltage suppressor

For electrical entry G, H, L, M

Nil	Without indicator light/surge voltage suppressor
S	With surge voltage suppressor
Z	With indicator light/surge voltage suppressor
R	With surge voltage suppressor (non-polar type)
U	With indicator light/surge voltage suppressor (non-polar type)

Note 1) For AC, there is no "S" specification, since it is integrated with the rectifier.
Note 2) "R" and "U" are available for DC only.

For electrical entry D

Nil	Without indicator light/surge voltage suppressor
S	With surge voltage suppressor (non-polar type)
Z	With indicator light/surge voltage suppressor (non-polar type)

Note 1) "DOZ" is not available.
Note 2) For AC, there is no "S" specification, since it is integrated with the rectifier.

Electrical entry

24V, 12V, 6V, 5V, 3VDC/100V, 110V, 200V, 220VAC				24V, 12VDC 100V, 110V, 200V, 220VAC
Grommet	**L type plug connector**	**M type plug connector**		**DIN terminal**
G: Lead wire length 300mm	**L:** With lead wire (length 300mm)	**M:** With lead wire (length 300mm)	**MN:** Without lead wire	**(Except SY3000)** **D:** With connector 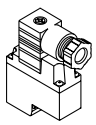
H: Lead wire length 600mm	**LN:** Without lead wire	**LO:** Without connector	**MO:** Without connector	**DO:** Without connector

Note 1) "LN" and "MN" include 2 sockets.
Note 2) "D" and "DO" are not available for SY3000.
Note 3) DIN43650C standard DIN terminal "Y" is also available. Refer to page 189 for details.

Note) When single body ported solenoid valves are ordered, manifold mounting bolts and gaskets are not included. Order them separately, if necessary. (Refer to page 56 for details.)

Order Made Pages 177 to 190

Specifications

Series		SY3000	SY5000	SY7000	SY9000
Fluid		Air			
Internal pilot operating pressure range MPa	2 position single	0.15 to 0.7			
	2 position double	0.1 to 0.7			
	3 position	0.2 to 0.7			
Ambient and fluid temperature °C		Maximum 50			
Maximum operating frequency Hz	2 position single, double	10	5	5	5
	3 position	3	3	3	3
Manual override		Non-locking push type, Push-turn locking slotted type, Push-turn locking lever type			
Pilot exhaust method		Common exhaust for main and pilot valves			
Lubrication		Not required			
Mounting orientation		Unrestricted			
Impact resistance/Vibration resistance m/s² Note)		150/30			
Enclosure		Dust proof (IP65 for DIN terminal*)			

* In compliance with IEC529 standard.
Note) **Impact resistance:** No malfunction resulted from the impact test using a drop impact tester. The test was performed one time each in the axial and right angle directions of the main valve and armature, for both energized and de-energized states. (Value in the initial stage)
Vibration resistance: No malfunction occurred in a one-sweep test between 8.3 and 2000Hz. Test was performed for both energized and de-energized states in the axial and right angle directions of the main valve and armature. (Value in the initial stage)

Solenoid specifications

Electrical entry			Grommet (G)/(H), L type plug connector (L), M type plug connector (M), DIN terminal (D) Note 1)
Rated coil voltage V	DC		24, 12, 6, 5, 3
	AC 50/60Hz		100, 110, 200, 220 Note 2)
Allowable voltage fluctuation			±10% of rated voltage
Current consumption W	DC		0.5 [With indicator light: 0.55 (0.6 for DIN terminal with indicator light)] Note 3)
Apparent power VA	AC	100V	0.9 (With indicator light: 1.0)
		110V [115V]	1.0 (With indicator light: 1.1) [1.1 (With indicator light: 1.2)]
		200V	1.8 (With indicator light: 1.9)
		220V [230V]	1.9 (With indicator light: 2.0) [2.2 (With indicator light: 2.3)]
Surge voltage suppressor			Diodes (ZNR for DIN terminal, Zener diode for G, L or M non-polar type)
Indicator light			LED (Neon bulb for AC type DIN terminal)

Note 1) DIN terminal (D) is not available for SY3000.
Note 2) 110 and 115VAC are common, as are 220 and 230VAC.
Note 3) Energy saving [0.22W] type is also available. Refer to page 190 for details.

Response time

Note) Based on dynamic performance test JISB8375-1981 (at coil temperature of 20°C with rated voltage)

SY3000

Type of actuation	Response time ms (at 0.5MPa)		
	Without indicator light/ surge voltage suppressor	With indicator light/surge voltage suppressor	
		S, Z types	R, U types
2 position single	12 or less	15 or less	12 or less
2 position double	10 or less	13 or less	10 or less
3 position	15 or less	20 or less	16 or less

SY5000

Type of actuation	Response time ms (at 0.5MPa)		
	Without indicator light/ surge voltage suppressor	With indicator light/surge voltage suppressor	
		S, Z types	R, U types
2 position single	19 or less	26 or less	19 or less
2 position double	18 or less	22 or less	18 or less
3 position	32 or less	38 or less	32 or less

SY7000

Type of actuation	Response time ms (at 0.5MPa)		
	Without indicator light/ surge voltage suppressor	With indicator light/surge voltage suppressor	
		S, Z types	R, U types
2 position single	31 or less	38 or less	33 or less
2 position double	27 or less	30 or less	28 or less
3 position	50 or less	56 or less	50 or less

SY9000

Type of actuation	Response time ms (at 0.5MPa)		
	Without indicator light/ surge voltage suppressor	With indicator light/surge voltage suppressor	
		S, Z types	R, U types
2 position single	35 or less	41 or less	35 or less
2 position double	35 or less	41 or less	35 or less
3 position	62 or less	64 or less	62 or less

Models/Series SY3000

Valve model	Type of actuation			Port size		Effective area mm² (Cv factor)		Weight g	
				P, EA, EB	A, B	P to A/B	A/B to EA/EB	Grommet	L/M type plug connector
SY3□20-□-M5	2 pos.	Single		M5 x 0.8	M5 x 0.8	3.6 (0.2)	3.78 (0.21)	48	51
		Double						62	70
	3 position	Closed center				3.6 (0.2)	3.42 (0.19)	65	72
		Exhaust center				3.6 (0.2)	3.78 (0.21) [2.7 (0.15)]		
		Pressure center				3.96 (0.22) [2.88 (0.16)]	3.6 (0.2)		
SY3□20-□-C4	2 pos.	Single		M5 x 0.8	C4 ø4 (One-touch fitting)	3.42 (0.19)	3.6 (0.2)	57	61
		Double						72	79
	3 position	Closed center				3.42 (0.19)	3.42 (0.19)	75	82
		Exhaust center				3.42 (0.19)	3.78 (0.21) [2.7 (0.15)]		
		Pressure center				3.6 (0.2) [2.16 (0.12)]	3.6 (0.2)		
SY3□20-□-C6	2 pos.	Single		M5 x 0.8	C6 ø6 (One-touch fitting)	3.6 (0.2)	4.14 (0.23)	53	57
		Double						68	75
	3 position	Closed center				3.6 (0.2)	3.96 (0.22)	71	78
		Exhaust center				3.78 (0.21)	4.5 (0.25) [3.06 (0.17)]		
		Pressure center				3.96 (0.22) [2.88 (0.16)]	3.96 (0.22)		

Note) Values inside [ ] are for normal position.

Models/Series SY7000

Valve model	Type of actuation			Port size		Effective area mm² (Cv factor)		Weight g		
				P, EA, EB	A, B	P to A/B	A/B to EA/EB	Grommet	L/M type plug connector	DIN terminal
SY7□20-□-02	2 pos.	Single		P port: Rc 1/4 EA, EB ports: Rc 1/8	Rc 1/4	16.2 (0.9)	15.66 (0.87)	98	102	125
		Double						114	121	167
	3 position	Closed center				12.06 (0.67)	11.34 (0.63)	122	129	175
		Exhaust center				11.88 (0.66)	16.74 (0.93) [11.7 (0.65)]			
		Pressure center				17.1 (0.95) [11.16 (0.62)]	11.34 (0.63)			
SY7□20-□-C8	2 pos.	Single		P port: Rc 1/4 EA, EB ports: Rc 1/8	C8 ø8 (One-touch fitting)	13.86 (0.77)	13.68 (0.76)	104	108	131
		Double						120	128	174
	3 position	Closed center				11.52 (0.64)	10.44 (0.58)	128	136	182
		Exhaust center				11.16 (0.62)	14.4 (0.8) [10.8 (0.6)]			
		Pressure center				14.58 (0.81) [10.62 (0.59)]	10.44 (0.58)			
SY7□20-□-C10	2 pos.	Single		P port: Rc 1/4 EA, EB ports: Rc 1/8	C10 ø10 (One-touch fitting)	15.84 (0.88)	14.94 (0.83)	100	103	126
		Double						116	123	169
	3 position	Closed center				12.24 (0.68)	11.16 (0.62)	124	131	177
		Exhaust center				11.88 (0.66)	16.2 (0.89) [11.34 (0.63)]			
		Pressure center				16.74 (0.93) [11.16 (0.62)]	11.34 (0.63)			

Note) Values inside [ ] are for normal position.

Models/Series SY5000

Valve model	Type of actuation			Port size		Effective area mm² (Cv factor)		Weight g		
				P, EA, EB	A, B	P to A/B	A/B to EA/EB	Grommet	L/M type plug connector	DIN terminal
SY5□20-□-01	2 pos.	Single		Rc 1/8	Rc 1/8	9.18 (0.51)	10.6 (0.59)	67	70	93
		Double						82	89	135
	3 position	Closed center				7.38 (0.41)	7.92 (0.44)	87	94	140
		Exhaust center				7.56 (0.42)	12.06 (0.67) [8.28 (0.46)]			
		Pressure center				10.62 (0.59) [4.32 (0.24)]	8.46 (0.47)			
SY5□20-□-C4	2 pos.	Single		Rc 1/8	C4 ø4 (One-touch fitting)	5.5 (0.31)	3.9 (0.22)	91	94	117
		Double						105	113	159
	3 position	Closed center				5.3 (0.29)	3.9 (0.22)	111	118	164
		Exhaust center				5.3 (0.29)	3.9 (0.22)			
		Pressure center				5.7 (0.32)	3.9 (0.22)			
SY5□20-□-C6	2 pos.	Single		Rc 1/8	C6 ø6 (One-touch fitting)	9 (0.5)	9 (0.5)	85	89	112
		Double						100	107	153
	3 position	Closed center				7.2 (0.4)	7.38 (0.41)	105	112	158
		Exhaust center				7.38 (0.41)	9.72 (0.54) [7.2 (0.4)]			
		Pressure center				10.62 (0.59) [4.32 (0.24)]	7.2 (0.4)			
SY5□20-□-C8	2 pos.	Single		Rc 1/8	C8 ø8 (One-touch fitting)	9.18 (0.51)	9.9 (0.55)	77	80	103
		Double						92	99	145
	3 position	Closed center				7.38 (0.41)	7.92 (0.44)	97	104	150
		Exhaust center				7.38 (0.41)	11.88 (0.66) [7.74 (0.43)]			
		Pressure center				10.62 (0.59) [4.32 (0.24)]	7.92 (0.44)			

Note) Values inside [ ] are for normal position.

Models/Series SY9000

Valve model	Type of actuation			Port size		Effective area mm² (Cv factor)		Weight g		
				P, EA, EB	A, B	P to A/B	A/B to EA/EB	Grommet	L/M type plug connector	DIN terminal
SY9□20-□-02	2 pos.	Single		Rc 1/4	Rc 1/4	35.76 (1.99)	37.43 (2.08)	238	242	265
		Double						254	262	308
	3 position	Closed center				34.69 (1.93)	30.51 (1.70)	278	286	332
		Exhaust center				33.63 (1.87)	41.09 (2.28) [18.96 (1.05)]			
		Pressure center				37.99 (2.11)	31.62 (1.76) [15.22 (0.85)]			
SY9□20-□-03	2 pos.	Single		Rc 1/4	Rc 3/8	37.90 (2.11)	38.23 (2.12)	233	237	260
		Double						249	257	303
	3 position	Closed center				35.98 (2.00)	32.37 (1.80)	273	281	327
		Exhaust center				34.17 (1.90)	44.76 (2.49) [24.92 (1.38)]			
		Pressure center				39.94 (2.22)	32.97 (1.83) [14.67 (0.82)]			
SY9□20-□-C8	2 pos.	Single		Rc 1/4	C8 ø8 (One-touch fitting)	27.34 (1.52)	16.23 (0.90)	290	294	317
		Double						306	314	360
	3 position	Closed center				26.75 (1.49)	16.55 (0.92)	330	338	384
		Exhaust center				26.17 (1.45)	16.42 (0.91) [15.68 (0.87)]			
		Pressure center				27.49 (1.53)	16.28 (0.90) [16.28 (0.90)]			
SY9□20-□-C10	2 pos.	Single		Rc 1/4	C10 ø10 (One-touch fitting)	31.16 (1.73)	27.40 (1.52)	276	280	303
		Double						292	300	346
	3 position	Closed center				30.74 (1.71)	26.08 (1.45)	316	324	370
		Exhaust center				30.02 (1.67)	27.13 (1.51) [18.26 (1.01)]			
		Pressure center				32.28 (1.79)	26.36 (1.46) [15.10 (0.83)]			
SY9□20-□-C12	2 pos.	Single		Rc 1/4	C12 ø12 (One-touch fitting)	33.45 (1.86)	35.81 (1.99)	262	266	289
		Double						278	286	332
	3 position	Closed center				32.96 (1.83)	29.62 (1.65)	302	310	356
		Exhaust center				32.38 (1.80)	37.77 (2.10) [18.83 (1.05)]			
		Pressure center				35.41 (1.97)	30.55 (1.70) [15.23 (0.85)]			

Note) Values inside [ ] are for normal position.

Construction

Series SY

Symbol:
2 position single

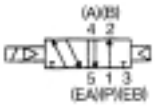

2 position single

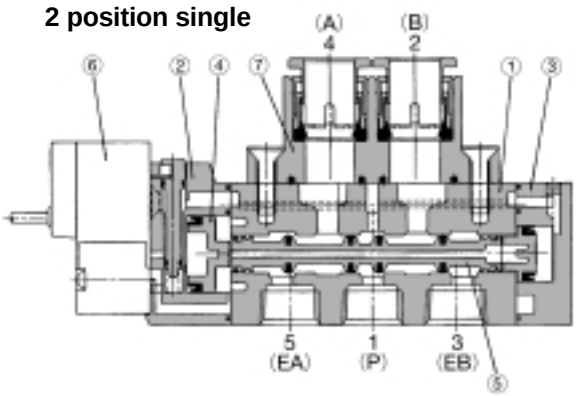

Symbol:
2 position double

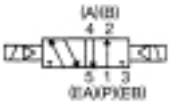

2 position double

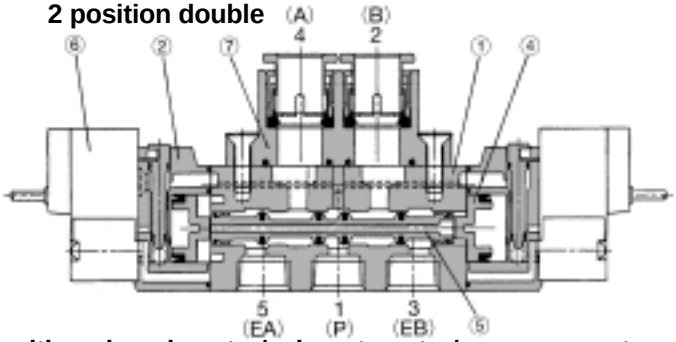

Symbol:
3 position closed center

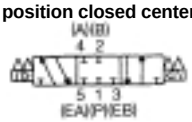

3 position exhaust center

3 position pressure center

3 position closed center/exhaust center/pressure center

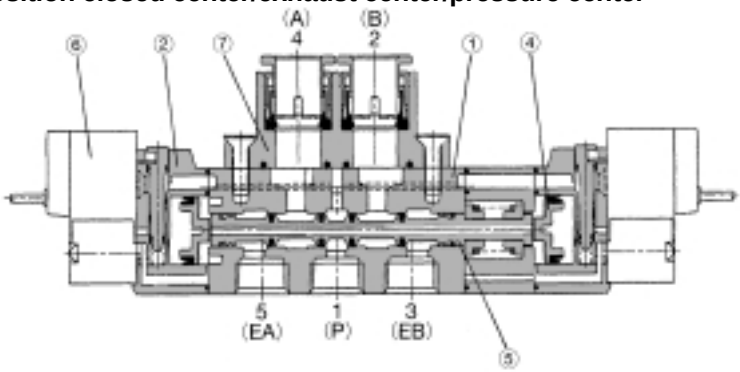

(The diagram above shows the closed center type.)

Parts list

No.	Description	Material	Note
1	Body	Die-cast aluminum (SY3000 is die-cast zinc.)	White
2	Adaptor plate	Resin	White (Gray for SY9000)
3	End plate	Resin	White
4	Piston	Resin	—
5	Spool valve assembly	Aluminum/NBR	—

Replacement parts

No.	Description	Part no.
6	Pilot valve assembly	Refer to "How to Order Pilot Valve Assemblies" on page 5.
7	Port block assembly	Refer to "How to Order Port Block Assemblies" on page 5.

Bracket assembly part nos.

Description	Part no.
Bracket (for F1 type)	SX$^{3}_{5}_{7}$000-16-2A (with mounting screws)
Bracket (for F2 type)	SX$^{3}_{5}_{7}$000-16-1A (with mounting screws)

∗ Brackets are not available for SY9000.

How to Replace Port Block Assembly

With the body ported type, the A/B port size can be changed by replacing the port block assembly mounted on the body. Use appropriate tightening torque when replacing the port block assembly, as insufficient tightening of mounting screws will cause air leakage, etc.

● **For SY5000** [SY5000-6A-01] [SY5000-6A-C6]

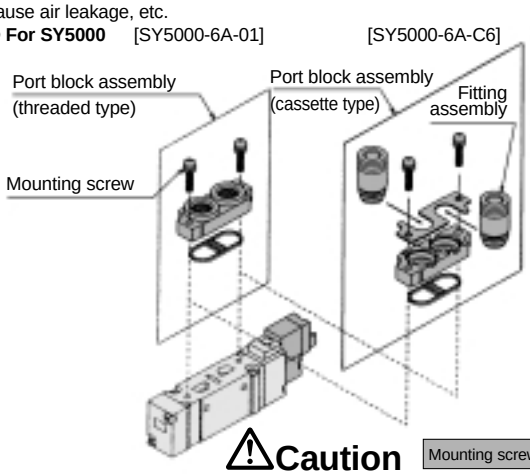

⚠Caution Mounting screw tightening torques

SY3000 (M2): 0.12N·m
SY$^{5}_{7}$000 (M3): 0.6N·m
SY9000 (M4): 1.4N·m

∗ Refer to "How to Order Port Block Assemblies" on page 5 for part numbers.

How to Order Pilot Valve Assemblies

SY114 — 5 G □

Rated voltage

5	24VDC
6	12VDC
V	6VDC
S	5VDC
R	3VDC
1	100VAC 50/60Hz
2	200VAC 50/60Hz
3	110VAC 50/60Hz [115VAC 50/60Hz]
4	220VAC 50/60Hz [230VAC 50/60Hz]

Indicator light/Surge voltage suppressor

Nil	Without indicator light/surge voltage suppressor
S	With surge voltage suppressor
Z	With indicator light/surge voltage suppressor
R	With surge voltage suppressor (non-polar type)
U	With indicator light/surge voltage suppressor (non-polar type)

Note 1) "S" specification is not available for AC since it is integrated with the rectifier.
Note 2) "R" and "U" specifications are only available for DC.

Electrical entry

G	Grommet (lead wire length: 300mm)	
H	Grommet (lead wire length: 600mm)	
L	L type plug connector	With lead wire
LN		Without lead wire
LO		Without connector
M	M type plug connector	With lead wire
MN		Without lead wire
MO		Without connector

SY115 — 5 D □

Rated voltage

5	24VDC
6	12VDC
1	100VAC 50/60Hz
2	200VAC 50/60Hz
3	110VAC 50/60Hz [115VAC 50/60Hz]
4	220VAC 50/60Hz [230VAC 50/60Hz]

Indicator light/Surge voltage suppressor

Nil	Without indicator light/surge voltage suppressor
S	With surge voltage suppressor (non-polar type)
Z	With indicator light/surge voltage suppressor (non-polar type)

Note 1) "DOZ" is not available.
Note 2) "S" specification is not available for AC since it is integrated with the rectifier.

Electrical entry

D	DIN terminal	With connector
DO		Without connector

Note) When replacing the pilot valve assembly alone, SY114 (G, H, L, and M) cannot be replaced with SY115 (DIN terminal), or vice versa.

How to Order Connector Assemblies

DC: **SY100 − 30 − 4A − □**

100VAC: **SY100 − 30 − 1A − □**

200VAC: **SY100 − 30 − 2A − □**

Other AC: **SY100 − 30 − 3A − □**

Without lead wire: **SY100 − 30 − A**
(Connector, socket x 2pcs. only)

Lead wire length

Nil	300mm
6	600mm
10	1000mm
15	1500mm
20	2000mm
25	2500mm
30	3000mm
50	5000mm

How to Order Port Block Assemblies

SY □ 000 — 6A — □

Series

3	SY3000
5	SY5000
7	SY7000
9	SY9000

A/B port size

Symbol	Port size	Applicable series
M5	M5 x 0.8	SY3000
C4	ø4 One-touch fitting	
C6	ø6 One-touch fitting	
01	Rc 1/8	SY5000
C4	ø4 One-touch fitting	
C6	ø6 One-touch fitting	
C8	ø8 One-touch fitting	
02	Rc 1/4	SY7000
C8	ø8 One-touch fitting	
C10	ø10 One-touch fitting	
02	Rc 1/4	SY9000
03	Rc 3/8	
C8	ø8 One-touch fitting	
C10	ø10 One-touch fitting	
C12	ø12 One-touch fitting	

∗ Fitting assembly alone can be replaced also.

SY3000	ø4 One-touch fitting	VVQ1000-50A-C4
	ø6 One-touch fitting	VVQ1000-50A-C6
SY5000	ø4 One-touch fitting	VVQ1000-51A-C4
	ø6 One-touch fitting	VVQ1000-51A-C6
	ø8 One-touch fitting	VVQ1000-51A-C8
SY7000	ø8 One-touch fitting	VVQ2000-51A-C8
	ø10 One-touch fitting	VVQ2000-51A-C10
SY9000	ø8 One-touch fitting	VVQ4000-50B-C8
	ø10 One-touch fitting	VVQ4000-50B-C10
	ø12 One-touch fitting	VVQ4000-50B-C12

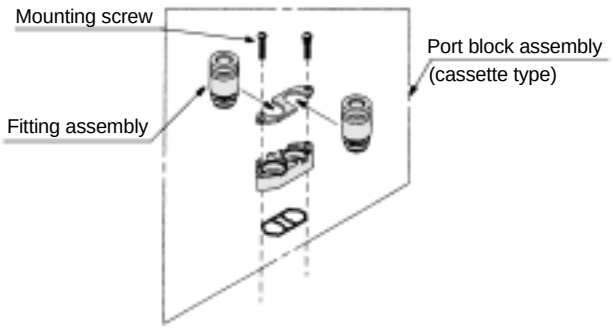

Series SY3000 Dimensions

CAD

Note) [ ]: Values for AC
< >: Values with surge voltage suppressor

2 position single
Grommet (G), (H): SY3120-□$^{G}_{H}$□□-$^{C4}_{C6}$(-F2)

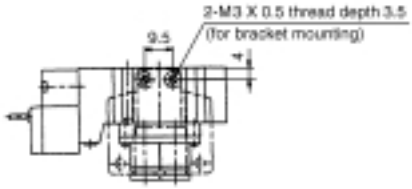

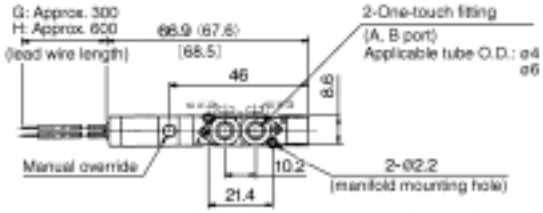

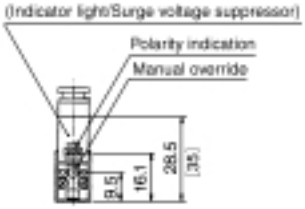

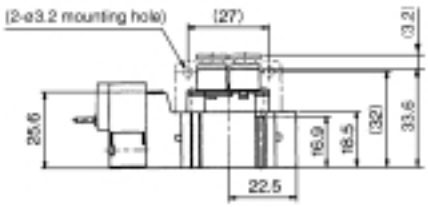

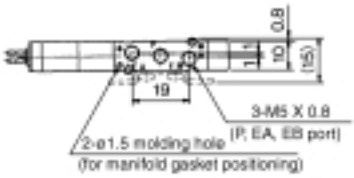

With foot bracket
SY3120-□$^{G}_{H}$□□-$^{C4}_{C6}$-F1

Scale: 40%

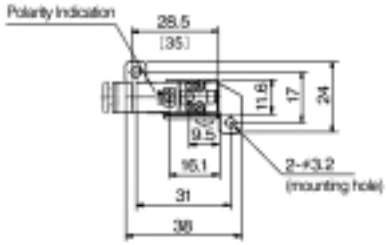

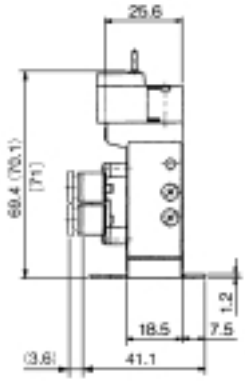

SY3120-□$^{G}_{H}$□□-M5

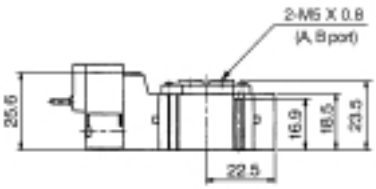

L type plug connector (L): SY3120-□L□□-$^{C4}_{C6}$

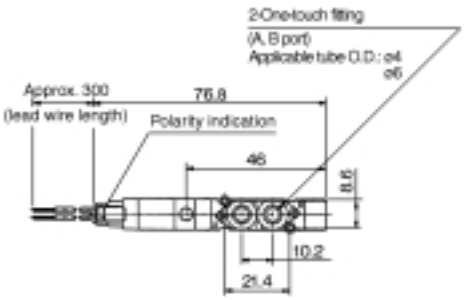

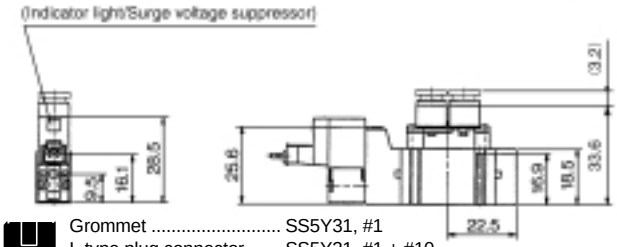

M type plug connector (M): SY3120-□M□□-$^{C4}_{C6}$

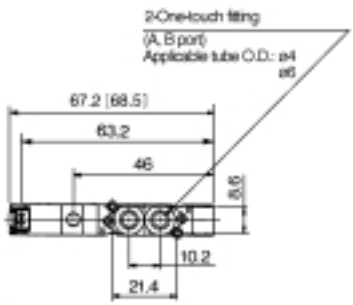

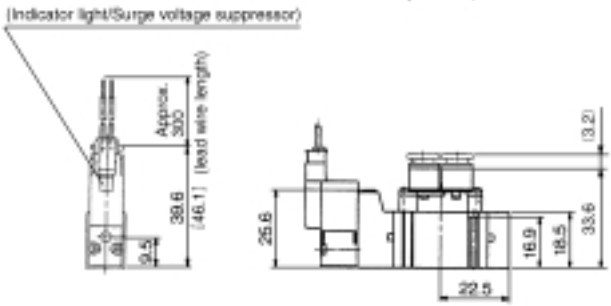

CAD

Grommet ..... SS5Y31, #1
L type plug connector ..... SS5Y31, #1 + #10
M type plug connector ..... SS5Y31, #1 + #13

Series SY3000 Dimensions

Note) [ ]: Values for AC
< >: Values with surge voltage suppressor

2 position double
Grommet (G), (H): SY3220-□$^{G}_{H}$□□-$^{C4}_{C6}$

SY3220-□$^{G}_{H}$□□-M5

Scale: 40%

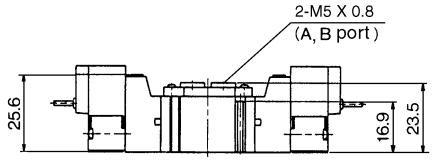

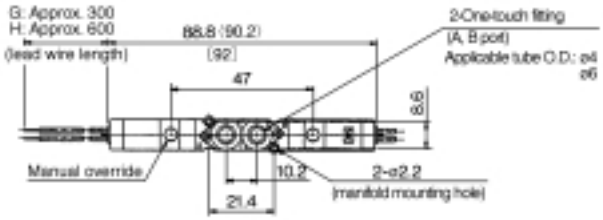

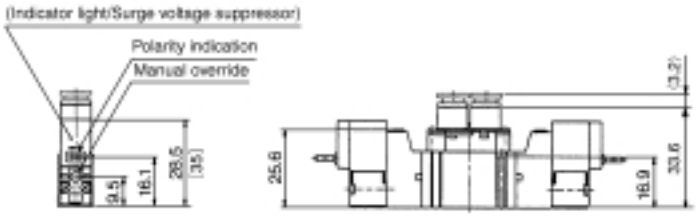

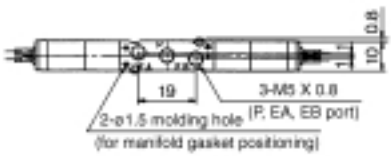

L type plug connector (L): SY3220-□L□□-$^{C4}_{C6}$

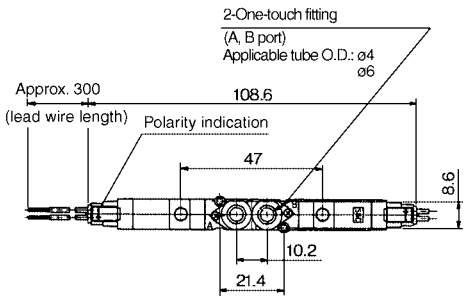

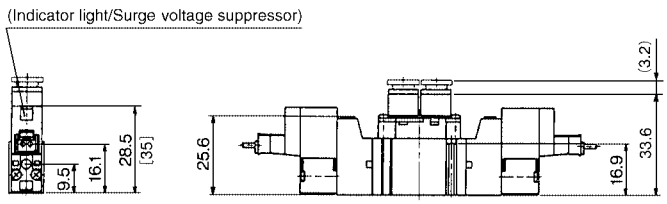

M type plug connector (M): SY3220-□M□□-$^{C4}_{C6}$

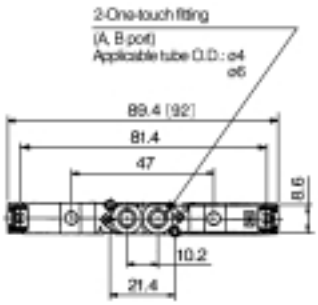

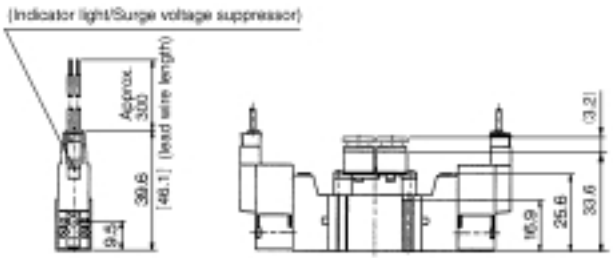

Grommet ..... SS5Y31, #2
L type plug connector ..... SS5Y31, #2 + #11
M type plug connector ..... SS5Y31, #2 + #14

CAD

Note) [ ]: Values for AC
< >: Values with surge voltage suppressor

3 position closed center/exhaust center/pressure center
Grommet (G), (H): SY3$^{3}_{4}{}_{5}$20-□$^{G}_{H}$□□-$^{C4}_{C6}$

SY3$^{3}_{4}{}_{5}$20-□$^{G}_{H}$□□-M5

Scale: 40%

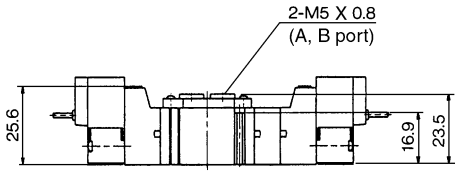

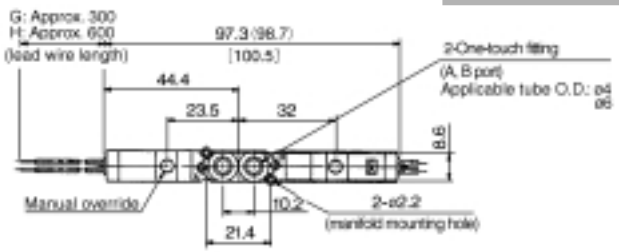

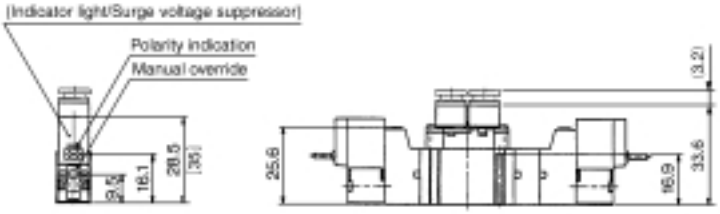

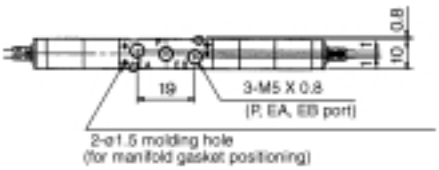

L type plug connector (L): SY3$^{3}_{4}{}_{5}$20-□L□□-$^{C4}_{C6}$

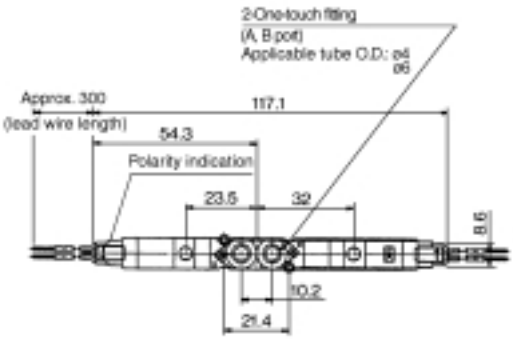

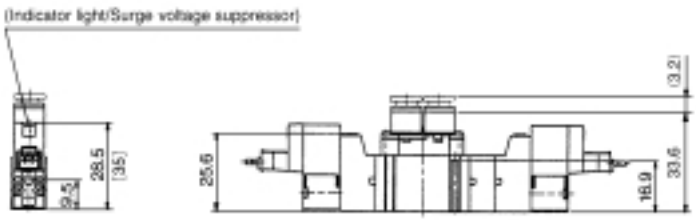

CAD

Grommet ..... SS5Y31, #3
L type plug connector ..... SS5Y31, #3 + #12
M type plug connector ..... SS5Y31, #3 + #15

M type plug connector (M): SY3$^{3}_{4}{}_{5}$20-□M□□-$^{C4}_{C6}$

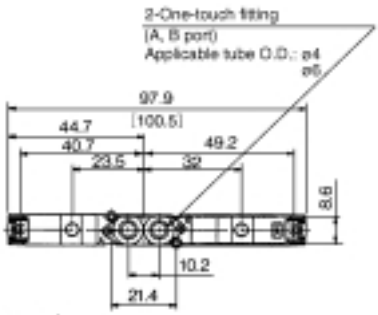

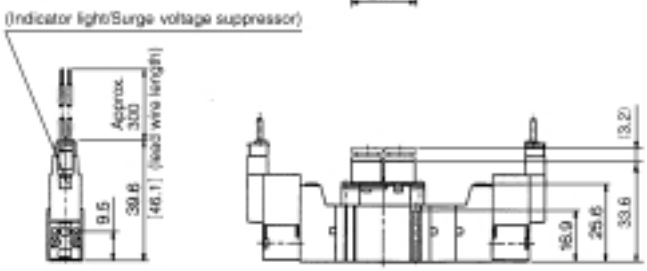

Series SY5000 Dimensions

CAD

Note) [ ]: Values for AC
< >: Values with surge voltage suppressor

2 position single
Grommet (G), (H): SY5120-□$^{G}_{H}$□□-$^{C4}_{C6}_{C8}$(-F2)

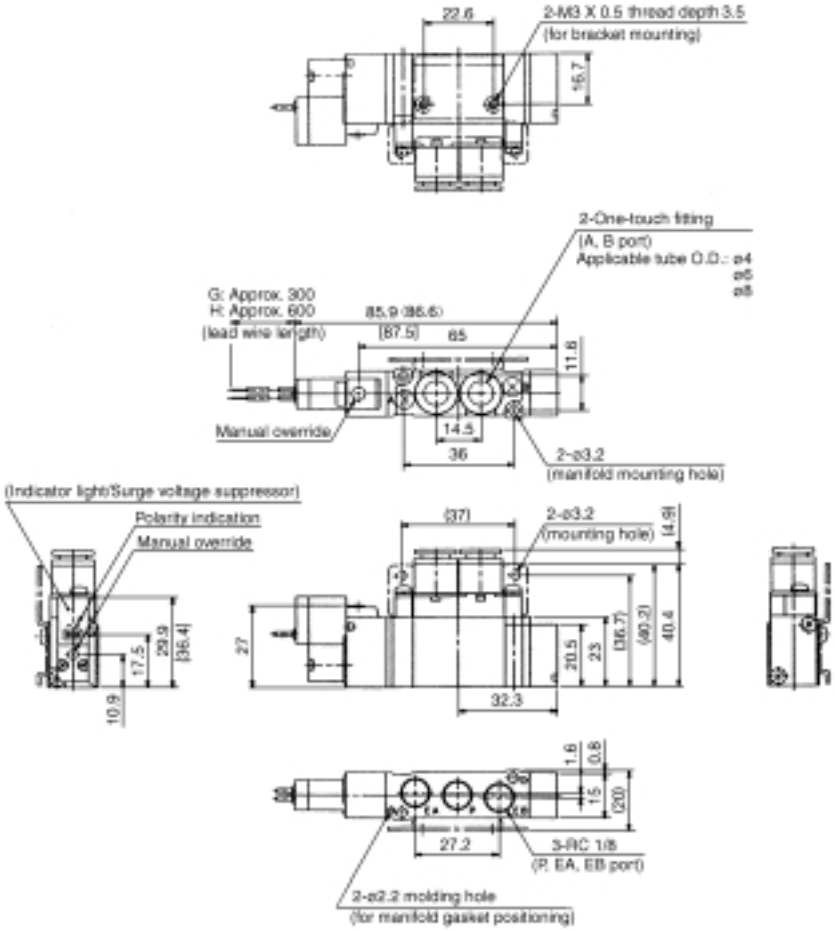

With foot bracket
SY5120-□$^{G}_{H}$□□-$^{C4}_{C6}_{C8}$-F1

Scale: 40%

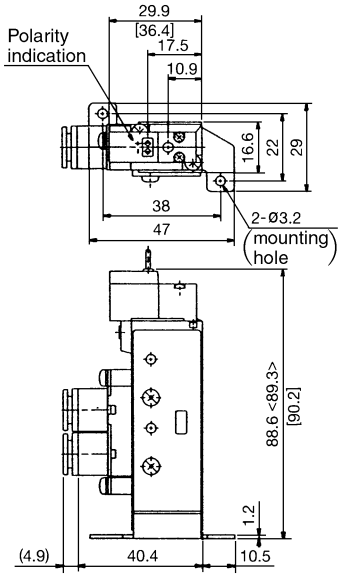

SY5120-□$^{G}_{H}$□□-01

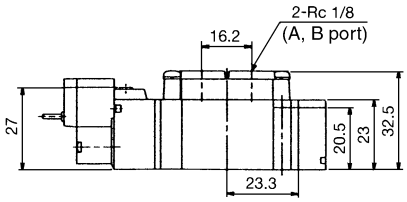

L type plug connector (L):
SY5120-□L□□-$^{C4}_{C6}_{C8}$

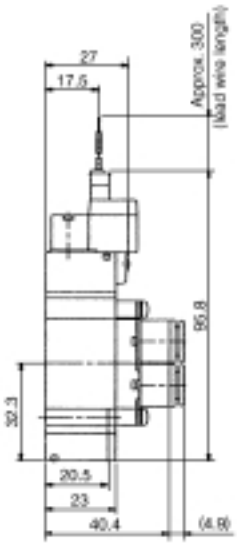

M type plug connector (M):
SY5120-□M□□-$^{C4}_{C6}_{C8}$

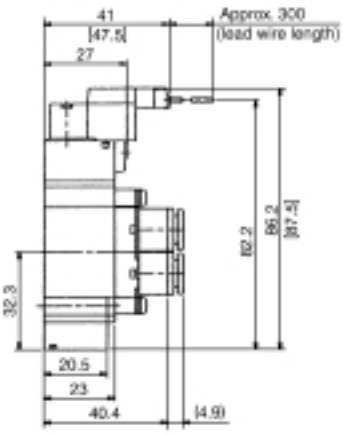

DIN terminal (D):
SY5120-□D□□-$^{C4}_{C6}_{C8}$

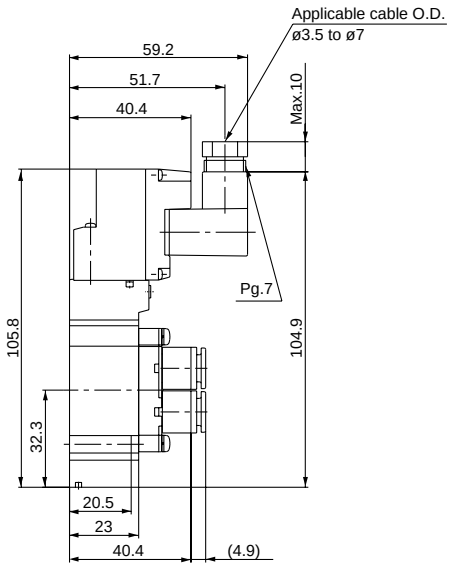

CAD
Grommet ..... SS5Y51, #1
L type plug connector ..... SS5Y51, #1 + #11
M type plug connector ..... SS5Y51, #1 + #14

CAD

Note) [ ]: Values for AC
< >: Values with surge voltage suppressor

2 position double
Grommet (G), (H): SY5220-□$^{G}_{H}$□□-$^{C4}_{C6}_{C8}$

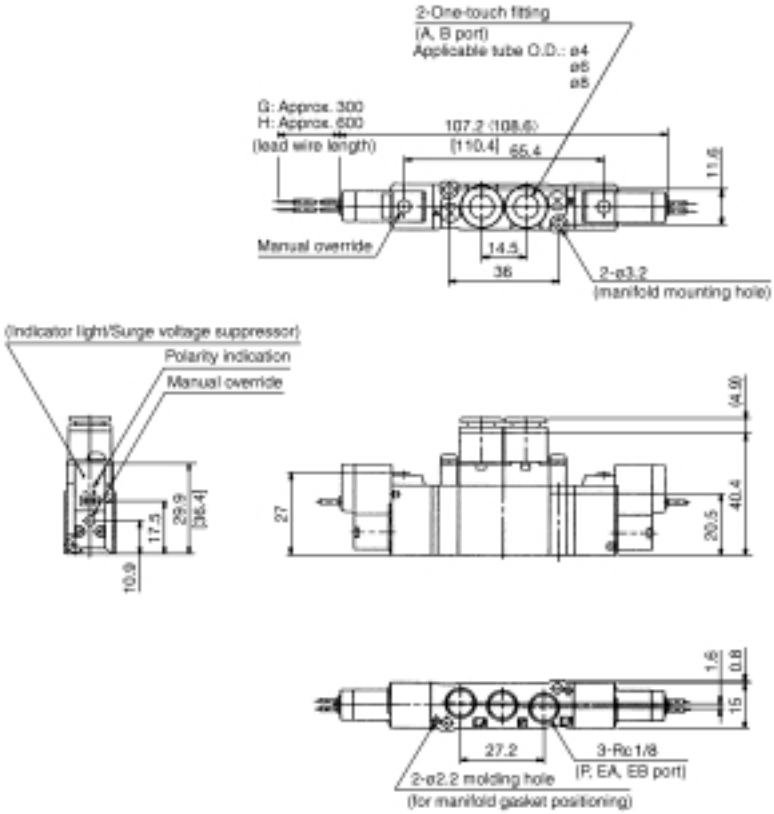

SY5220-□$^{G}_{H}$□□-01

Scale: 40%

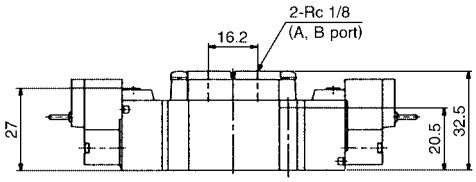

L type plug connector (L):
SY5220-□L□□-$^{C4}_{C6}_{C8}$

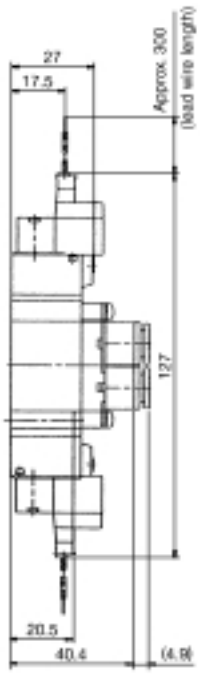

M type plug connector (M):
SY5220-□M□□-$^{C4}_{C6}_{C8}$

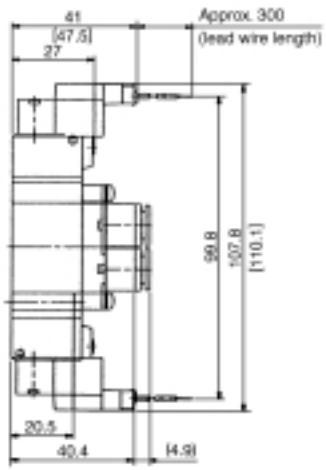

DIN terminal (D):
SY5220-□D□□-$^{C4}_{C6}_{C8}$

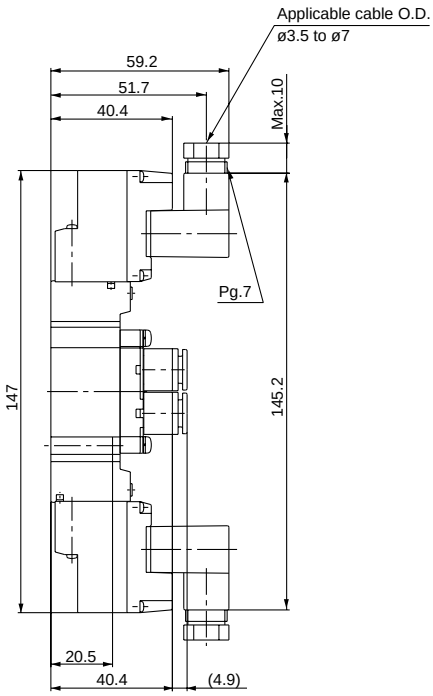

CAD
Grommet ..... SS5Y51, #2
L type plug connector .....SS5Y51, #2 + #12
M type plug connector .....SS5Y51, #2 + #15

Series SY5000 Dimensions

CAD

Note) [ ]: Values for AC
< >: Values with surge voltage suppressor

3 position closed center/exhaust center/pressure center

Grommet (G), (H): SY5$^{3}_{4}$$_{5}$20-□$^{G}_{H}$□□-$^{C4}_{C6}$$_{C8}$

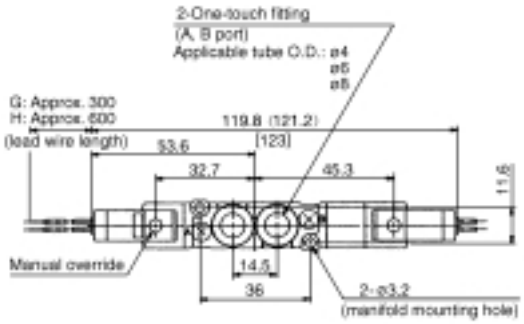

SY5$^{3}_{4}$$_{5}$20-□$^{G}_{H}$□□-01

Scale: 40%

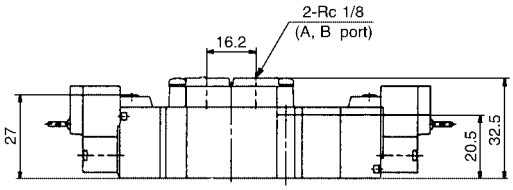

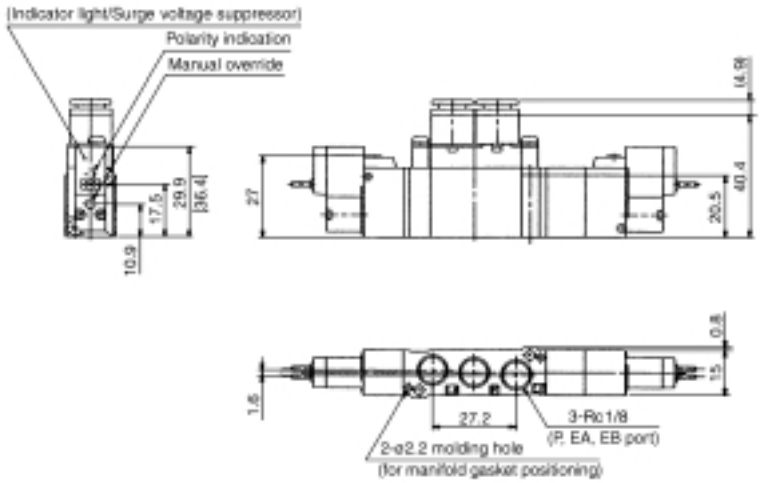

L type plug connector (L):

SY5$^{3}_{4}$$_{5}$20-□L□□-$^{C4}_{C6}$$_{C8}$

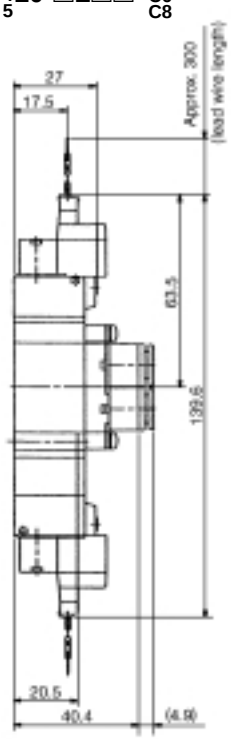

M type plug connector (M):

SY5$^{3}_{4}$$_{5}$20-□M□□-$^{C4}_{C6}$$_{C8}$

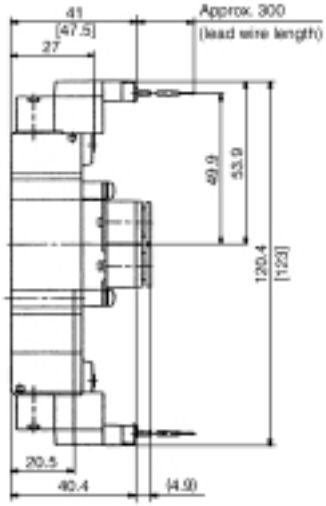

DIN terminal (D):

SY5$^{3}_{4}$$_{5}$20-□D□□-$^{C4}_{C6}$$_{C8}$

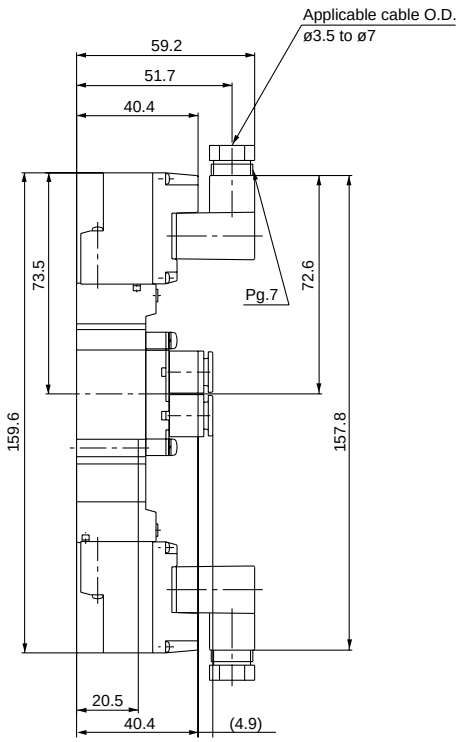

CAD

Grommet ..... SS5Y51, #3
L type plug connector ..... SS5Y51, #3 + #13
M type plug connector ..... SS5Y51, #3 + #16

Series SY7000 Dimensions

CAD

Note) [ ]: Values for AC
< >: Values with surge voltage suppressor

Scale: 40%

2 position single
Grommet (G), (H): SY7120-□$^{G}_{H}$□□-$^{C8}_{C10}$ (-F2)

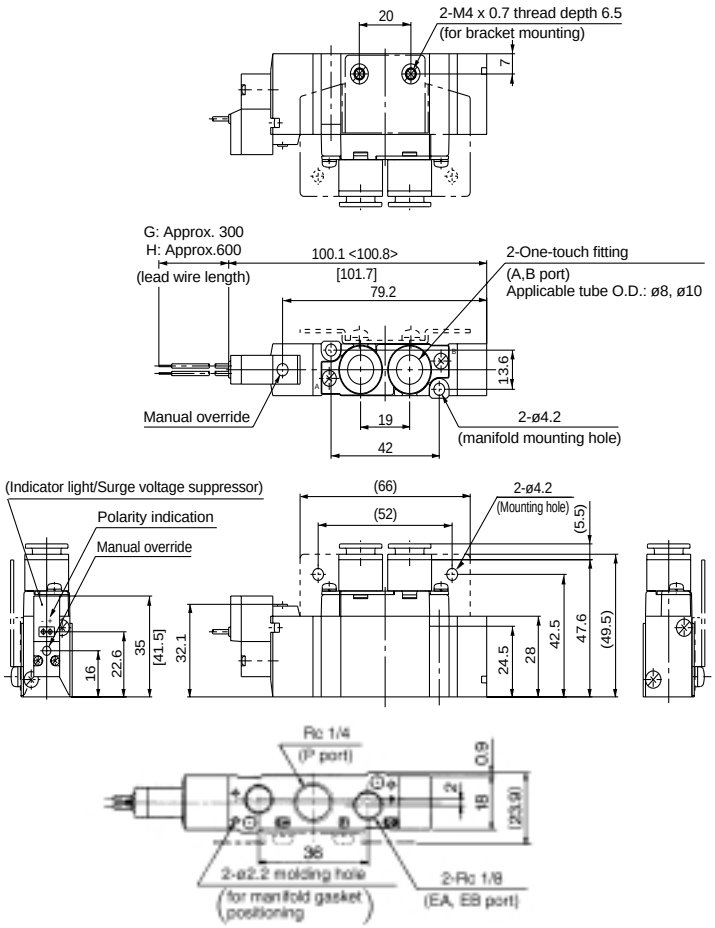

SY7120-□$^{G}_{H}$□□-$^{C8}_{C10}$-F1

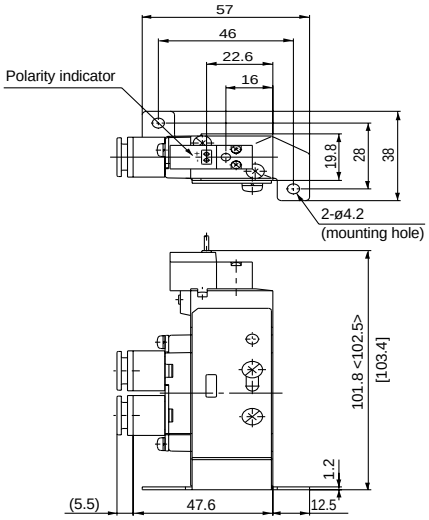

SY7120-□$^{G}_{H}$□□-02

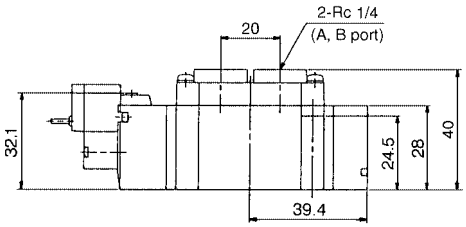

L type plug connector (L): SY7120-□L□□-$^{C8}_{C10}$

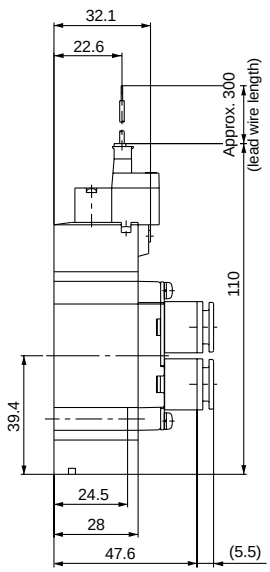

M type plug connector (M): SY7120-□M□□-$^{C8}_{C10}$

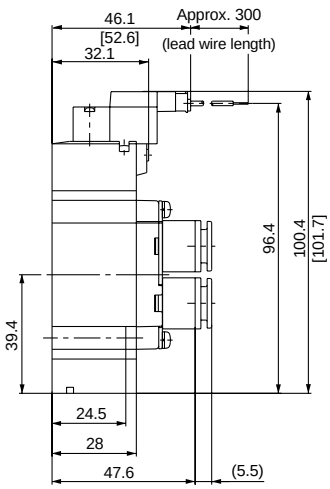

DIN terminal (D): SY7120-□D□□-$^{C8}_{C10}$

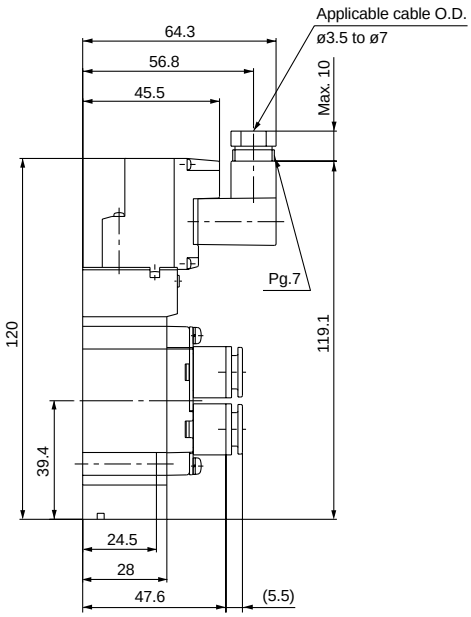

CAD
Grommet ..... SS5Y71, #1
L type plug connector ..... SS5Y71, #1 + #10
M type plug connector ..... SS5Y71, #1 + #13

Series SY7000 Dimensions

Note) [ ]: Values for AC
< >: Values with surge voltage suppressor

2 position double
Grommet (G), (H): SY7220-□$^{G}_{H}$□□-$^{C8}_{C10}$

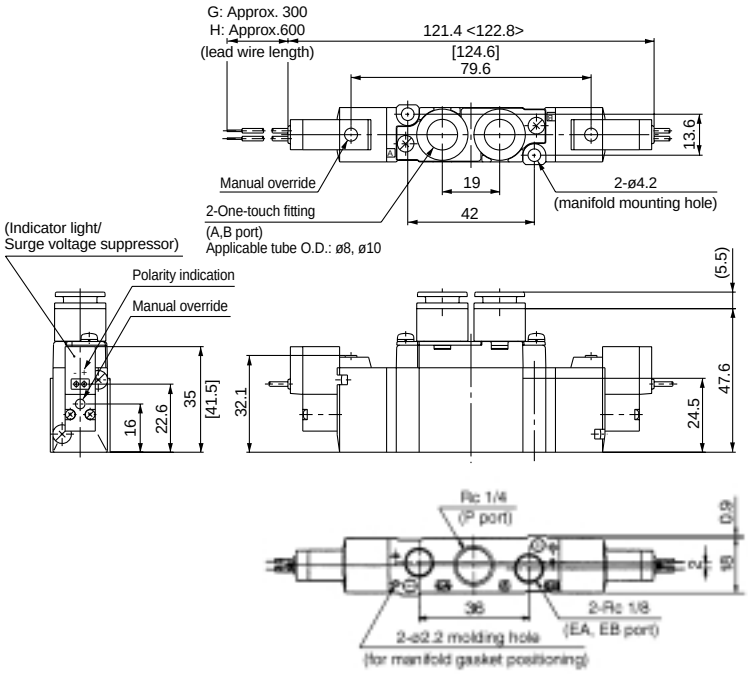

SY7220-□$^{G}_{H}$□□-02

Scale: 40%

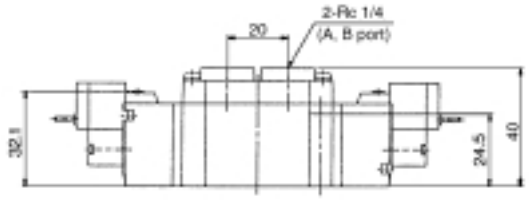

L type plug connector (L):
SY7220-□L□□-$^{C8}_{C10}$

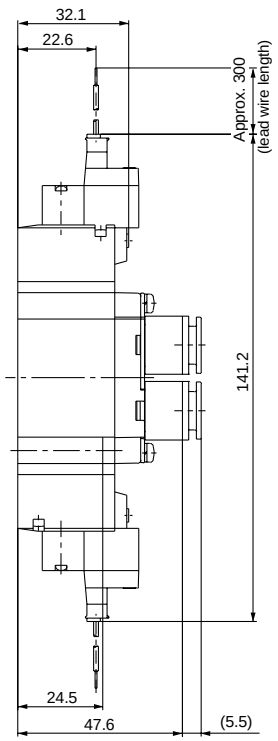

M type plug connector (M):
SY7220-□M□□-$^{C8}_{C10}$

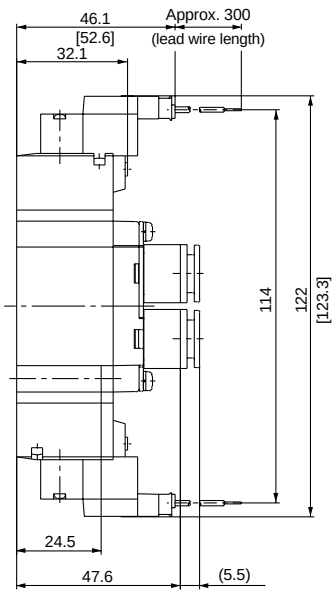

DIN terminal (D):
SY7220-□D□□-$^{C8}_{C10}$

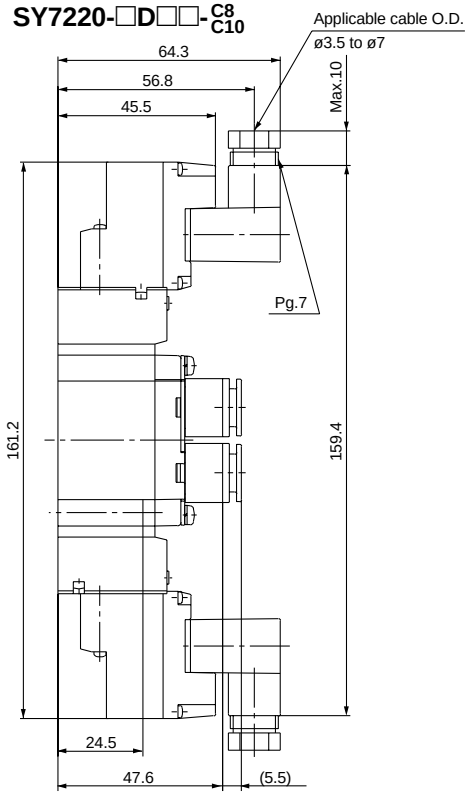

Grommet ..... SS5Y71, #2
L type plug connector ..... SS5Y71, #2 + #11
M type plug connector ..... SS5Y71, #2 + #14

Note) [ ]: Values for AC
< >: Values with surge voltage suppressor

3 position closed center/exhaust center/pressure center
Grommet (G), (H): SY7$^{3}_{4}$$_{5}$20-□$^{G}_{H}$□□-$^{C8}_{C10}$

SY7$^{3}_{4}$$_{5}$20-□$^{G}_{H}$□□-02

Scale: 40%

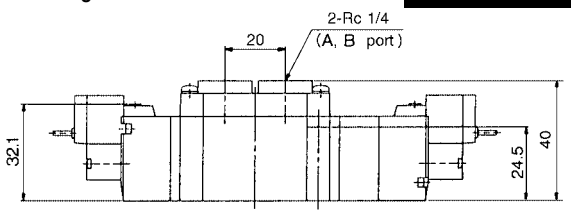

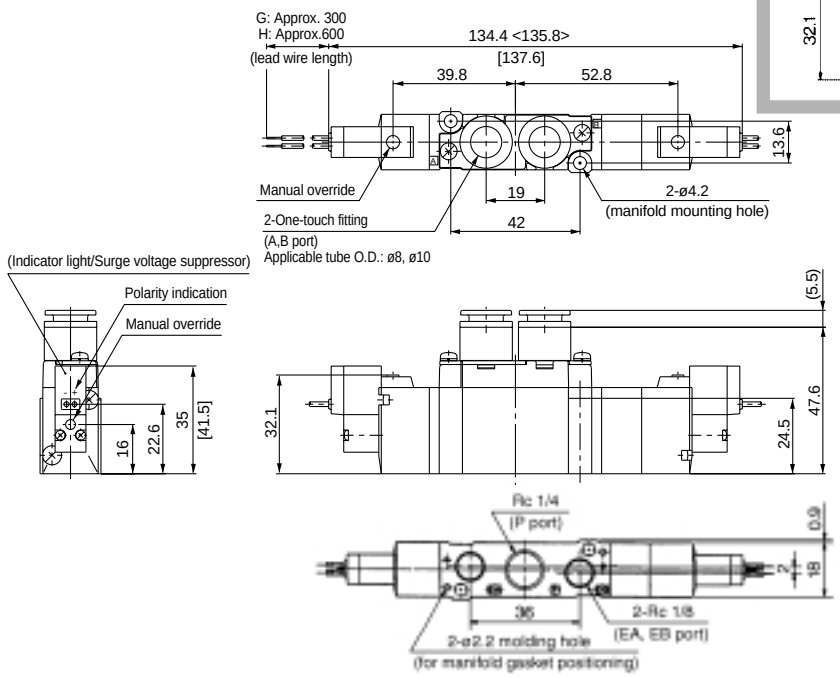

L type plug connector (L):
SY7$^{3}_{4}$$_{5}$20-□L□□-$^{C8}_{C10}$

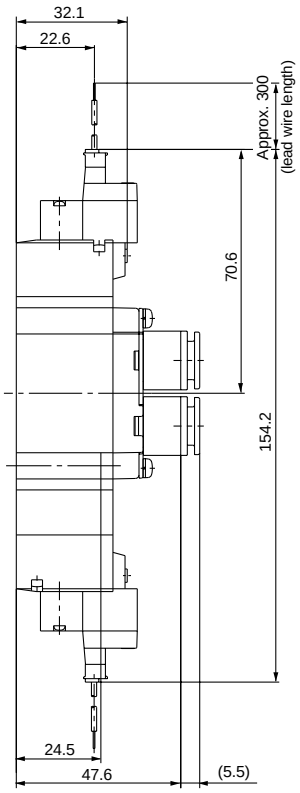

M type plug connector (M):
SY7$^{3}_{4}$$_{5}$20-□M□□-$^{C8}_{C10}$

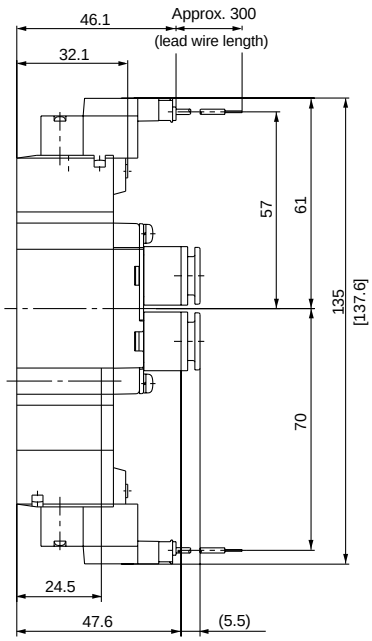

DIN terminal (D):
SY7$^{3}_{4}$$_{5}$20-□D□□-$^{C8}_{C10}$

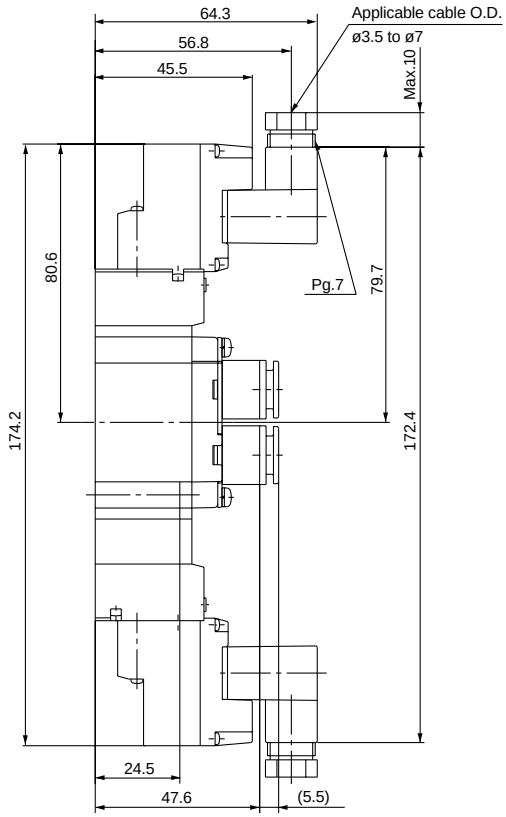

Grommet ..... SS5Y71, #3
L type plug connector ..... SS5Y71, #3 + #12
M type plug connector ..... SS5Y71, #3 + #15

Series SY9000 Dimensions

Note) [ ]: Values for AC
< >: Values with surge voltage suppressor

2 position single

Grommet (G), (H): SY9120-□$^{G}_{H}$□□-$^{C8}_{C10}$ $^{}_{C12}$

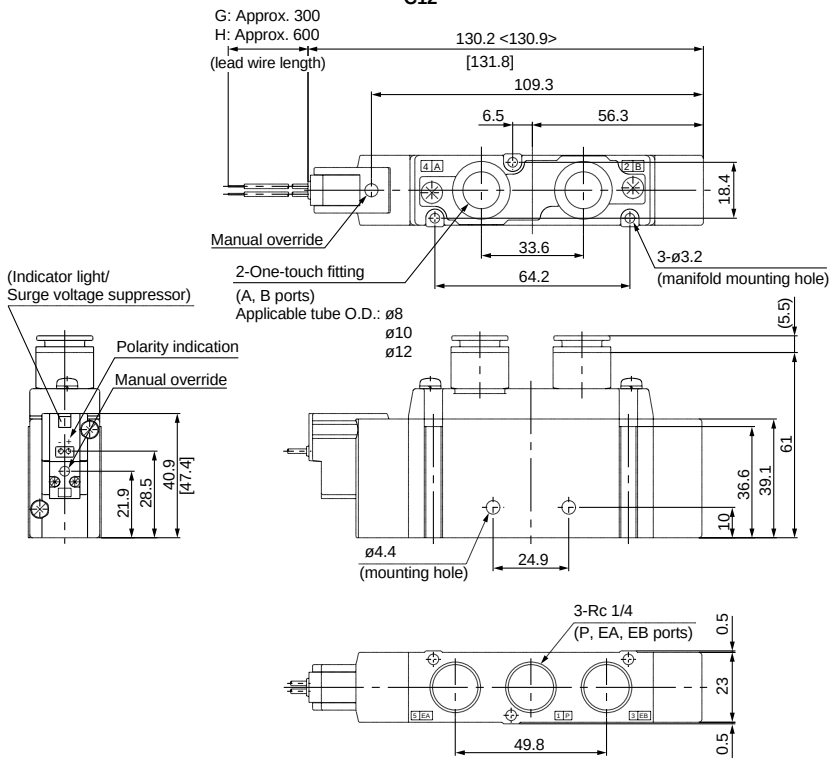

SY9120-□$^{G}_{H}$□□-$^{02}_{03}$

Scale: 40%

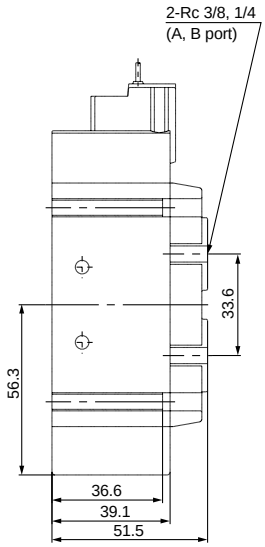

L type plug connector (L):
SY9120-□L□□-$^{C8}_{C10}$ $^{}_{C12}$

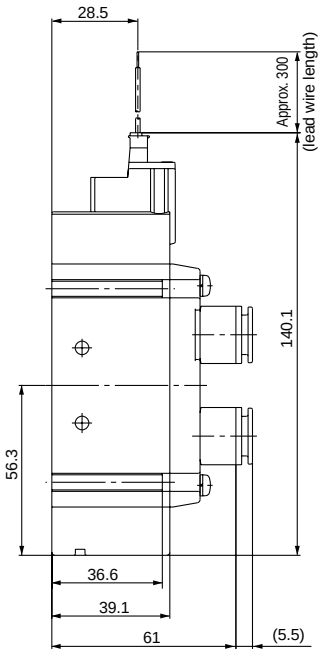

M type plug connector (M):
SY9120-□M□□-$^{C8}_{C10}$ $^{}_{C12}$

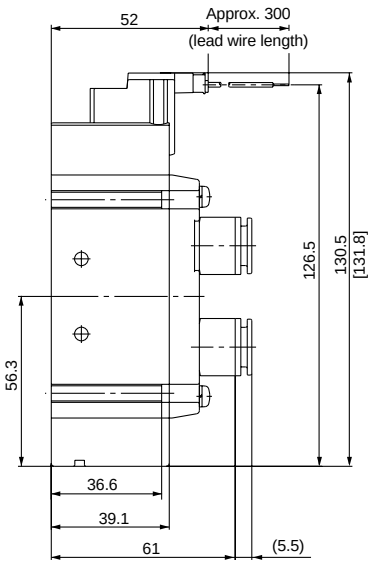

DIN terminal (D):
SY9120-□D□□-$^{C8}_{C10}$ $^{}_{C12}$

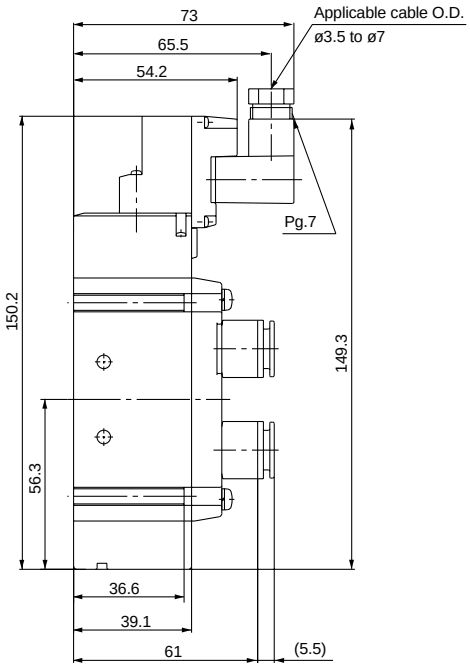

Series SY9000 Dimensions

Note) [ ]: Values for AC
< >: Values with surge voltage suppressor

2 position double

Grommet (G), (H): SY9220-□$^{G}_{H}$□□-$^{C8}_{C10}$ $^{}_{C12}$

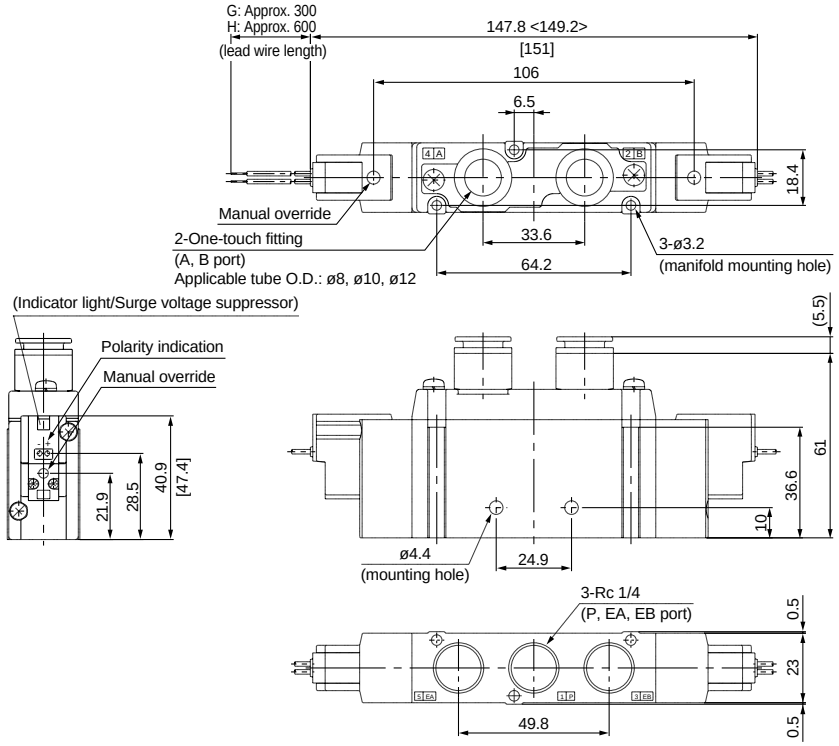

SY9220-□$^{G}_{H}$□□-$^{02}_{03}$

Scale: 40%

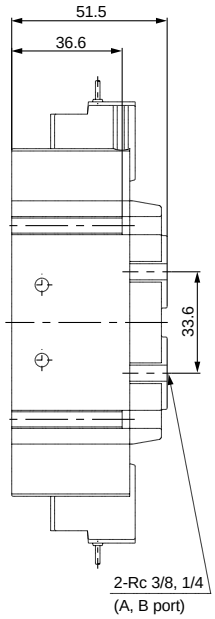

L type plug connector (L):

SY9220-□L□□-$^{C8}_{C10}$ $^{}_{C12}$

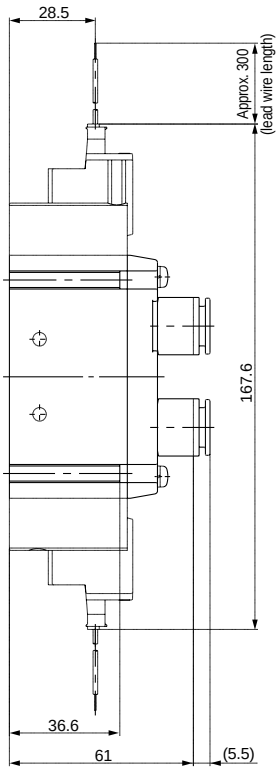

M type plug connector (M):

SY9220-□M□□-$^{C8}_{C10}$ $^{}_{C12}$

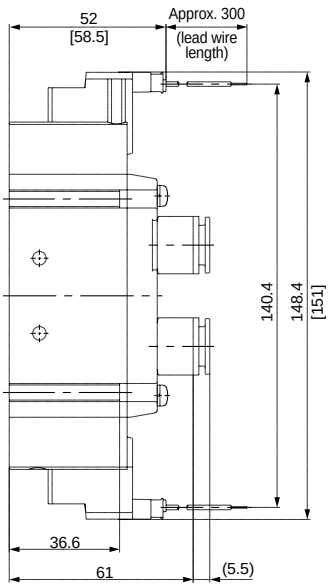

DIN terminal (D):

SY9220-□D□□-$^{C8}_{C10}$ $^{}_{C12}$

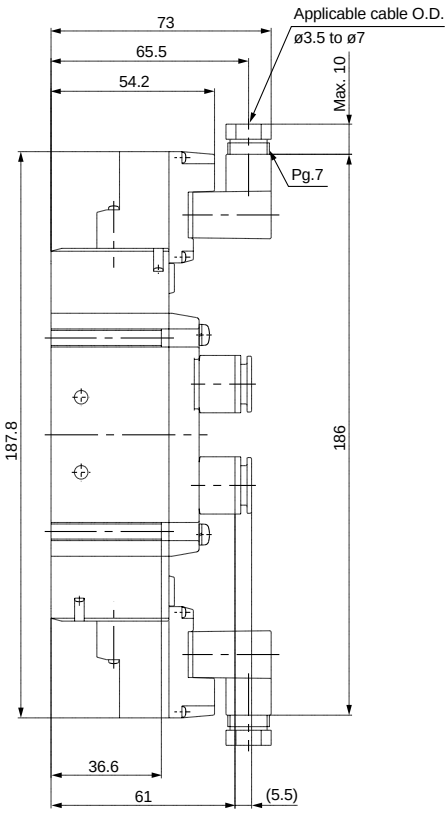

Series SY9000 Dimensions

Note) [ ]: Values for AC
< >: Values with surge voltage suppressor

3 position closed center/exhaust center/pressure center
Grommet (G), (H): SY9$^{3}_{4}_{5}$20-□$^{G}_{H}$□□-$^{C8}_{C10}_{C12}$

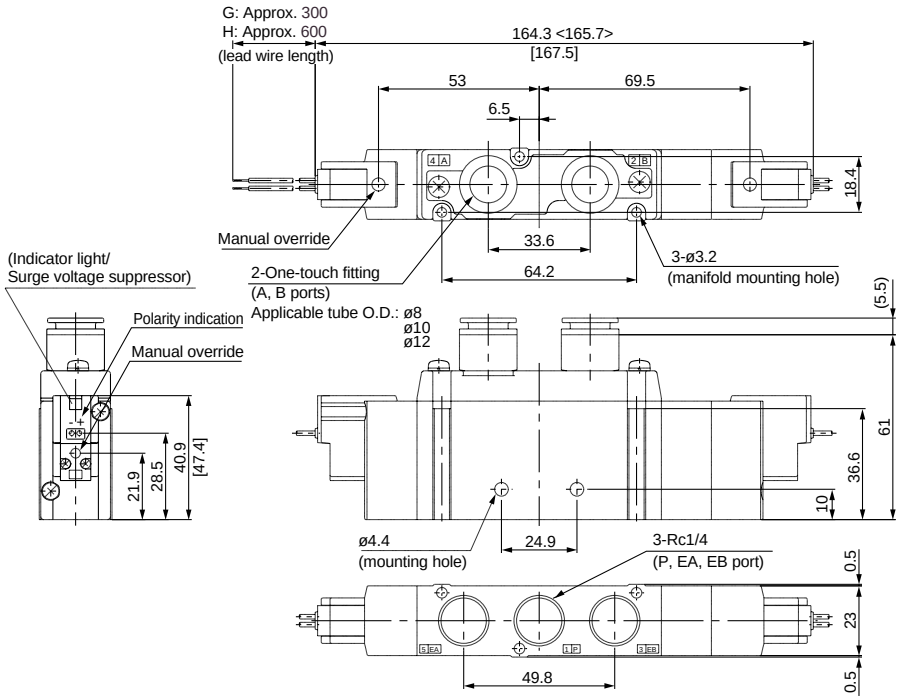

SY9$^{3}_{4}_{5}$20-□$^{G}_{H}$□□-$^{02}_{03}$

Scale: 40%

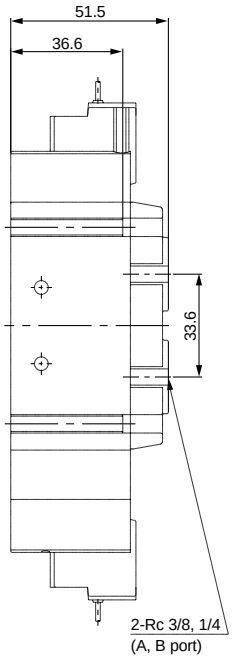

L type plug connector (L):
SY9$^{3}_{4}_{5}$20-□L□□-$^{C8}_{C10}_{C12}$

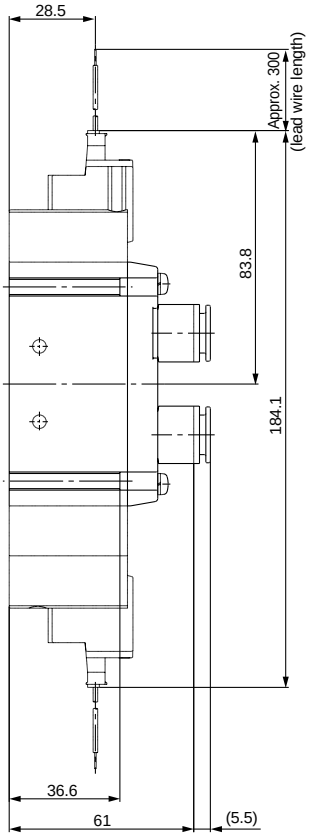

M type plug connector (M):
SY9$^{3}_{4}_{5}$20-□M□□-$^{C8}_{C10}_{C12}$

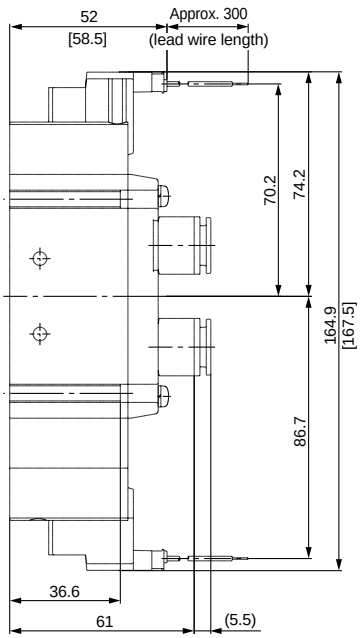

DIN terminal (D):
SY9$^{3}_{4}_{5}$20-□D□□-$^{C8}_{C10}_{C12}$

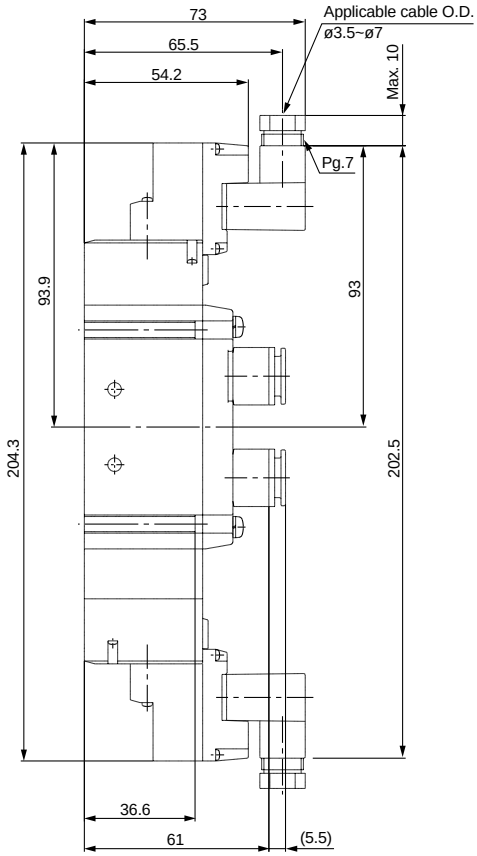

SY3000/5000/7000/9000
Base Mounted Type
Single Valve

CAD

How to Order

SY 5 2 40 ☐ – 5 L ☐ ☐ – ☐

Series

3	SY3000
5	SY5000
7	SY7000
9	SY9000

Type of actuation

1	2 position single
2	2 position double 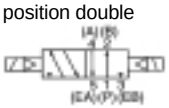
3	3 position closed center 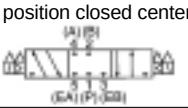
4	3 position exhaust center
5	3 position pressure center 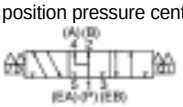

Pilot type

Nil	Internal pilot
R	External pilot

Rated voltage

DC specifications

5	24VDC
6	12VDC
V	6VDC
S	5VDC
R	3VDC

AC specifications (50/60Hz)

1	100VAC
2	200VAC
3	110VAC [115VAC]
4	220VAC [230VAC]

Note 1) DC specifcations for "D" and "DO" are only available in 24VDC and 12VDC.
Note 2) "D" and "DO" are not available for SY3000.

Port size

Symbol	Port size	Applicable series
Nil	Without sub-plate	
01	Rc 1/8 With sub-plate	SY3000
02	Rc 1/4 With sub-plate	SY5000 SY7000
03	Rc 3/8 With sub-plate	SY7000 SY9000
04	Rc 1/2 With sub-plate	SY9000

Manual override

Nil: Non-locking push type	**D:** Push-turn locking slotted type
E: Push-turn locking lever type 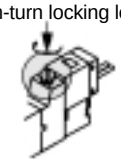	

Indicator light/Surge voltage suppressor

For electrical entry G, H, L, M

Nil	Without indicator light/surge voltage suppressor
S	With surge voltage suppressor
Z	With indicator light/surge voltage suppressor
R	With surge voltage suppressor (non-polar type)
U	With indicator light/surge voltage suppressor (non-polar type)

Note 1) For AC, there is no "S" specification, since it is integrated with the rectifier.
Note 2) "R" and "U" are available for DC only.

For electrical entry D

Nil	Without indicator light/surge voltage suppressor
S	With surge voltage suppressor (non-polar type)
Z	With indicator light/surge voltage suppressor (non-polar type)

Note 1) "DOZ" is not available.
Note 2) For AC, there is no "S" specification, since it is integrated with the rectifier.

Electrical entry

24V, 12V, 6V, 5V, 3VDC/100V, 110V, 200V, 220VAC				24V, 12VDC 100V, 110V, 200V, 220VAC
Grommet	**L type plug connector**	**M type plug connector**		**DIN terminal**
G: Lead wire length 300mm	**L:** With lead wire (length 300mm)	**M:** With lead wire (length 300mm)	**MN:** Without lead wire	**(Except SY3000)** **D:** With connector 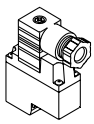
H: Lead wire length 600mm	**LN:** Without lead wire	**LO:** Without connector	**MO:** Without connector	**DO:** Without connector

Note 1) "LN" and "MN" include 2 sockets
Note 2) "D" and "DO" are not available for SY3000.
Note 3) DIN43650C standard DIN terminal "Y" is also available. Refer to page 189 for details.

Order Made Pages 177 to 190

Specifications

Series			SY3000	SY5000	SY7000	SY9000
Fluid			Air			
Internal pilot operating pressure range MPa	2 position single		0.15 to 0.7			
	2 position double		0.1 to 0.7			
	3 position		0.2 to 0.7			
External pilot operating pressure range MPa	Operating pressure range		–100kPa to 0.7			
	Pilot pressure range	2 position single	0.25 to 0.7			
		2 position double	0.25 to 0.7			
		3 position	0.25 to 0.7			
Ambient and fluid temperature °C			Maximum 50			
Maximum operating frequency Hz	2 position single, double		10	5	5	5
	3 position		3	3	3	3
Manual override			Non-locking push type, Push-turn locking slotted type, Push-turn locking lever type			
Pilot exhaust type	Internal pilot		Common exhaust for main and pilot valves			
	External pilot		Separate exhaust for pilot valve			
Lubrication			Not required			
Mounting orientation			Unrestricted			
Impact resistance/Vibration resistance m/s² Note)			150/30			
Enclosure			Dust proof (IP65 for DIN terminal*)			

* In compliance with IEC529 standard.

Note) **Impact resistance:** No malfunction resulted from the impact test using a drop impact tester. The test was performed one time each in the axial and right angle directions of the main valve and armature, for both energized and de-energized states. (Value in the initial stage)

Vibration resistance: No malfunction occurred in a one-sweep test between 8.3 and 2000Hz. Test was performed for both energized and de-energized states in the axial and right angle directions of the main valve and armature. (Value in the initial stage)

Solenoid specifications

Electrical entry			Grommet (G)/(H), L type plug connector (L), M type plug connector (M), DIN terminal (D) Note 1)
Rated coil voltage V	DC		24, 12, 6, 5, 3
	AC 50/60Hz		100, 110, 200, 220 Note 2)
Allowable voltage fluctuation			±10% of rated voltage
Current consumption W	DC		0.5 [With indicator light: 0.55 (0.6 for DIN terminal with indicator light)] Note 3)
Apparent power VA	AC	100V	0.9 (With indicator light: 1.0)
		110V [115V]	1.0 (With indicator light: 1.1) [1.1 (With indicator light: 1.2)]
		200V	1.8 (With indicator light: 1.9)
		220V [230V]	1.9 (With indicator light: 2.0) [2.2 (With indicator light: 2.3)]
Surge voltage suppressor			Diodes (ZNR for DIN terminal, Zener diode for G, L or M non-polar type)
Indicator light			LED (Neon bulb for AC type DIN terminal)

Note 1) DIN terminal (D) is not available for SY3000.
Note 2) 110 and 115VAC are common, as are 220 and 230VAC.
Note 3) Energy saving [0.22W] type is also available. Refer to page 190 for details.

Response time

Note) Based on dynamic performance test JISB8375-1981 (at coil temperature of 20°C with rated voltage)

SY3000

Type of actuation	Response time ms (at 0.5MPa)		
	Without indicator light/ surge voltage suppressor	With indicator light/ surge voltage suppressor	
		S, Z types	R, U types
2 position single	12 or less	15 or less	12 or less
2 position double	10 or less	13 or less	10 or less
3 position	15 or less	20 or less	16 or less

SY7000

Type of actuation	Response time ms (at 0.5MPa)		
	Without indicator light/ surge voltage suppressor	With indicator light/ surge voltage suppressor	
		S, Z types	R, U types
2 position single	31 or less	38 or less	33 or less
2 position double	27 or less	30 or less	28 or less
3 position	50 or less	56 or less	50 or less

SY5000

Type of actuation	Response time ms (at 0.5MPa)		
	Without indicator light/ surge voltage suppressor	With indicator light/ surge voltage suppressor	
		S, Z types	R, U types
2 position single	19 or less	26 or less	19 or less
2 position double	18 or less	22 or less	18 or less
3 position	32 or less	38 or less	32 or less

SY9000

Type of actuation	Response time ms (at 0.5MPa)		
	Without indicator light/ surge voltage suppressor	With indicator light/ surge voltage suppressor	
		S, Z types	R, U types
2 position single	35 or less	41 or less	35 or less
2 position double	35 or less	41 or less	35 or less
3 position	62 or less	64 or less	62 or less

Models/Series SY3000

Valve model	Type of actuation		Port size	Effective area[Note1)] mm² (CV factor)		Weight g[Note 2)]	
				P to A/B	A/B to EA/EB	Grommet	L/M type plug connector
SY3□40-□-01	2 pos.	Single	Rc 1/8	4.86 (0.27)	5.4 (0.3)	81 (47)	85 (51)
		Double		4.86 (0.27)	5.4 (0.3)	96 (62)	103 (69)
	3 position	Closed center		4.68 (0.26)	4.86 (0.27)	98 (63)	105 (70)
		Exhaust center		4.86 (0.27)	5.94 (0.33) [3.24 (0.18)]		
		Pressure center		6.66 (0.37) [3.24 (0.18)]	5.22 (0.29)		

Note 1) Values inside [ ] are for normal position.
Note 2) Values inside ( ) are for valves without sub-plate.

Models/Series SY5000

Valve model	Type of actuation		Port size	Effective area[Note1)] mm² (CV factor)		Weight g[Note 2)]		
				P to A/B	A/B to EA/EB	Grommet	L/M type plug connector	DIN terminal
SY5□40-□-02	2 pos.	Single	Rc 1/4	12.78 (0.71)	12.6 (0.7)	118 (55)	121 (59)	154 (82)
		Double		12.78 (0.71)	12.6 (0.7)	133 (70)	140 (77)	186 (123)
	3 position	Closed center		7.56 (0.42)	8.1 (0.45)	138 (76)	146 (83)	192 (129)
		Exhaust center		7.92 (0.44)	14.4 (0.8) [9.0 (0.5)]			
		Pressure center		15.84 (0.88) [4.5 (0.25)]	8.64 (0.48)			

Note 1) Values inside [ ] are for normal position.
Note 2) Values inside ( ) are for valves without sub-plate.

Models/Series SY7000

Valve model	Type of actuation		Port size	Effective area[Note1)] mm² (CV factor)		Weight g[Note 2)]		
				P to A/B	A/B to EA/EB	Grommet	L/M type plug connector	DIN terminal
SY7□40-□-02/03	2 pos.	Single	Rc 1/4 Rc 3/8	23.22 (1.29)	21.6 (1.2)	215 (86)	219 (90)	242 (113)
		Double		23.22 (1.29)	21.6 (1.2)	231 (102)	238 (109)	284 (155)
	3 position	Closed center		14.04 (0.78)	12.24 (0.68)	233 (104)	241 (112)	287 (158)
		Exhaust center		14.04 (0.78)	20.88 (1.16) [12.96 (0.72)]			
		Pressure center		24.48 (1.36) [13.5 (0.75)]	12.42 (0.69)			

Note 1) Values inside [ ] are for normal position.
Note 2) Values inside ( ) are for valves without sub-plate.

Models/Series SY9000

Valve model	Type of actuation		Port size	Effective area[Note1)] mm² (CV factor)		Weight g[Note 2)]		
				P to A/B	A/B to EA/EB	Grommet	L/M type plug connector	DIN terminal
SY9□40-□-03	2 pos.	Single	Rc 3/8	40.29 (2.24)	47.94 (2.66)	466 (169)	470 (173)	493 (196)
		Double				482 (185)	490 (193)	535 (239)
	3 position	Closed center		39.57 (2.20)	36.92 (2.05)	506 (209)	514 (217)	560 (263)
		Exhaust center		37.56 (2.09)	62.31 (3.46) [20.64 (1.15)]			
		Pressure center		57.25 (3.18)	37.51 (2.08) [16.48 (0.92)]			
SY9□40-□-04	2 pos.	Single	Rc 1/2	44.75 (2.49)	51.71 (2.87)	445	449	472
		Double				461	469	515
	3 position	Closed center		40.24 (2.24)	37.61 (2.09)	485	493	539
		Exhaust center		39.76 (2.21)	64.12 (3.56) [20.76 (1.15)]			
		Pressure center		59.21 (3.29)	37.85 (2.10) [15.23 (0.85)]			

Note 1) Values inside [ ] are for normal position.
Note 2) Values inside ( ) are for valves without sub-plate.

Construction

Series SY

Symbol:
2 position single

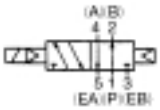

2 position single

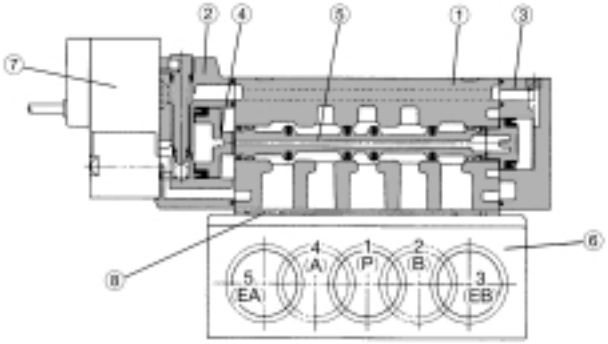

Symbol:
2 position double

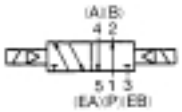

2 position double

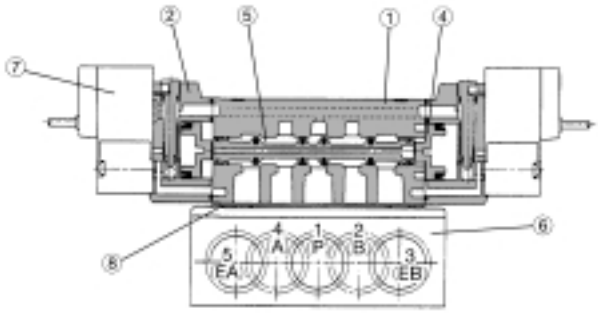

Symbol:
3 position closed center

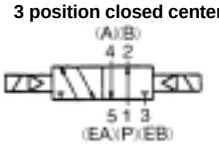

3 position exhaust center

3 position pressure center

3 position closed center/exhaust center/pressure center

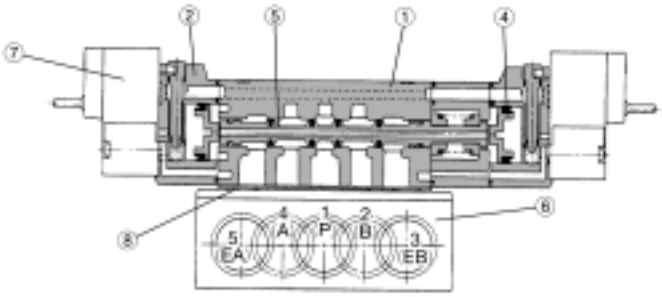

(The diagram above shows the closed center type.)

Parts list

No.	Description	Material	Note
1	Body	Die-cast aluminum (SY3000 is die-cast zinc.)	White
2	Adaptor plate	Resin	White (Gray for SY9000)
3	End plate	Resin	White
4	Piston	Resin	—
5	Spool valve assembly	Aluminum/NBR	—

Replacement parts

No.	Description	Part no.				Note
		SY3□40	SY5□40	SY7□40	SY9□40	
6	Sub-plate	SY3000-27-1	SY5000-27-1	Rc 1/4: SY7000-27-1 Rc 3/8: SY7000-27-2	Rc 3/8: SY9000-27-1 Rc 1/2: SY9000-27-2	Die-cast aluminum
7	Pilot valve assembly	Refer to "How to Order Pilot Valve Assemblies" on page 23.				
8	Gasket	SY3000-11-25	SY5000-11-13	SY7000-11-7	SY9000-11-2	NBR
—	Round head combination screw	SY3000-23-4 (M2 x 21)	M3 x 26	M4 x 31	SY9000-18-2 (M3 x 42)	For mounting valves (Flat nickel plated)

⚠Caution

Mounting screw tightening torques

M2: 0.15N·m
M3: 0.6N·m
M4: 1.4N·m

How to Order Pilot Valve Assemblies

SY114 — 5 G □

Rated voltage

5	24VDC
6	12VDC
V	6VDC
S	5VDC
R	3VDC
1	100VAC 50/60Hz
2	200VAC 50/60Hz
3	110VAC 50/60Hz [115VAC 50/60Hz]
4	220VAC 50/60Hz [230VAC 50/60Hz]

Indicator light/Surge voltage suppressor

Nil	Without indicator light/surge voltage suppressor
S	With surge voltage suppressor
Z	With indicator light/surge voltage suppressor
R	With surge voltage suppressor (non-polar type)
U	With indicator light/surge voltage suppressor (non-polar type)

Note 1) "S" specification is not available for AC since it is integrated with the rectifier.
Note 2) "R" and U" specifications are only available for DC.

Electrical entry

G	Grommet (lead wire length: 300mm)	
H	Grommet (lead wire length: 600mm)	
L	L type plug connector	With lead wire
LN		Without lead wire
LO		Without connector
M	M type plug connector	With lead wire
MN		Without lead wire
MO		Without connector

SY115 — 5 D □

Rated voltage

5	24VDC
6	12VDC
1	100VAC 50/60Hz
2	200VAC 50/60Hz
3	110VAC 50/60Hz [115VAC 50/60Hz]
4	220VAC 50/60Hz [230VAC 50/60Hz]

Indicator light/Surge voltage suppressor

Nil	Without indicator light/surge voltage suppressor
S	With surge voltage suppressor (non-polar type)
Z	With indicator light/surge voltage suppressor (non-polar type)

∗ DOZ is not available.
∗ "S" specification is not available for AC since it is integrated with the rectifier.

Electrical entry

D	DIN terminal	With connector
DO		Without connector

How to Order Connector Assemblies

DC: **SY100 − 30 − 4A − □**
100VAC: **SY100 − 30 − 1A − □**
200VAC: **SY100 − 30 − 2A − □**
Other AC: **SY100 − 30 − 3A − □**
Without lead wire: **SY100 − 30 − A**
(Connector, socket x 2pcs. only)

Lead wire length

Nil	300mm
6	600mm
10	1000mm
15	1500mm
20	2000mm
25	2500mm
30	3000mm
50	5000mm

How to Order Interface Regulators (SY3000, 5000 only)

Series SY3000

ARBY3000 — 05 — P — 2

Pressure gauge connecting port

05	Pressure gauge (G15-10-01)
M1	Plug (M-5P)

Regulated port

P	P port
A1	A port (P port control type A port regulated)
B1	B port (P port control type B port regulated)

Series SY5000

ARBY5000 — 00 — P — 2

Pressure gauge connecting port

00	Pressure gauge (G15-10-01)
M1	Plug (M-5P)

Regulated port

P	P port
A1	A port (P port control type A port regulated)
B1	B port (P port control type B port regulated)

ARBY3000-05-□-2

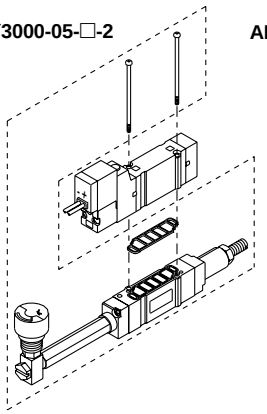

ARBY3000-M1-□-2

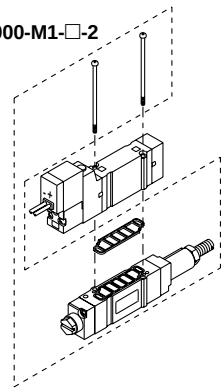

ARBY5000-00-□-2

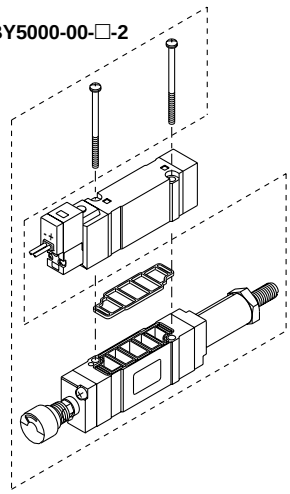

ARBY5000-M1-□-2

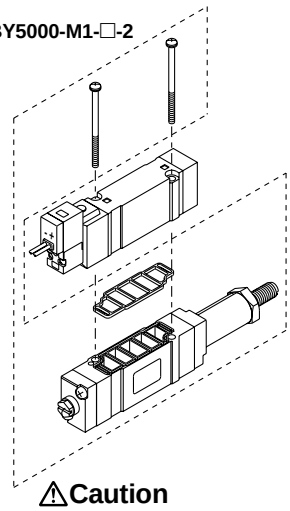

Accessories

Series	Round head combination screw	Gasket
ARBY3000	SY3000-23-10 (M2 x 36)	SX3000-57-4
ARBY5000	M3 x 48.5 (Flat nickel plated)	SX5000-57-5

⚠Caution

Mounting screw tightening torques

M2: 0.15N·m
M3: 0.6N·m

Series SY3000 Dimensions

CAD

Note) [ ]: for AC
< >: Values with surge voltage suppressor

Scale: 35%

2 position single
Grommet (G), (H): SY3140(R) -□$^{G}_{H}$□□-01

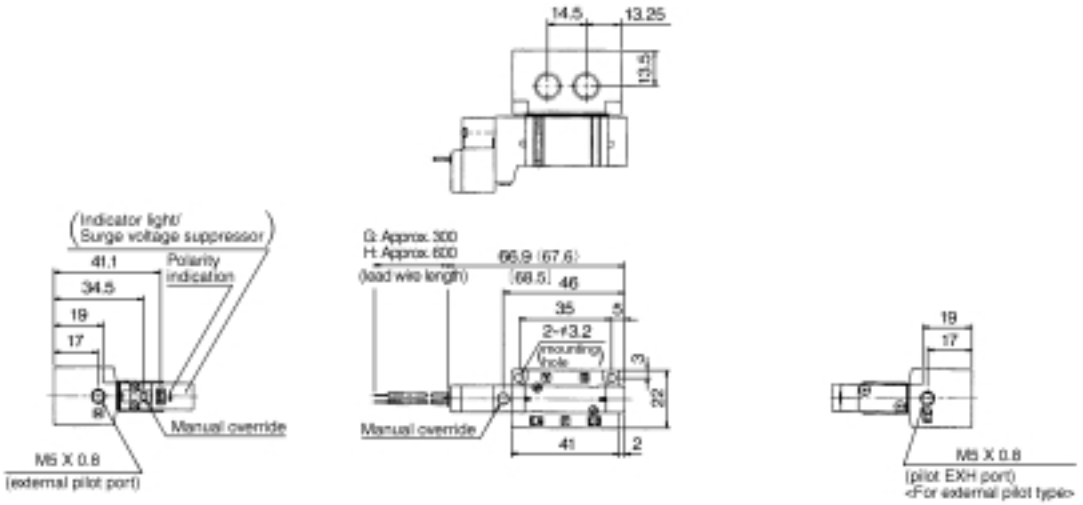

With interface regulator

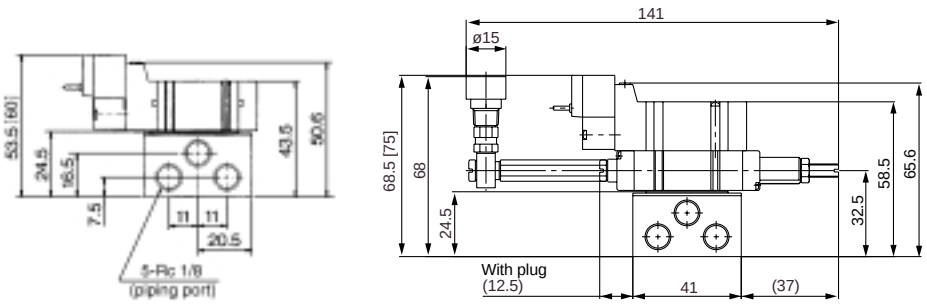

L type plug connector (L): SY3140(R)-□L□□-01

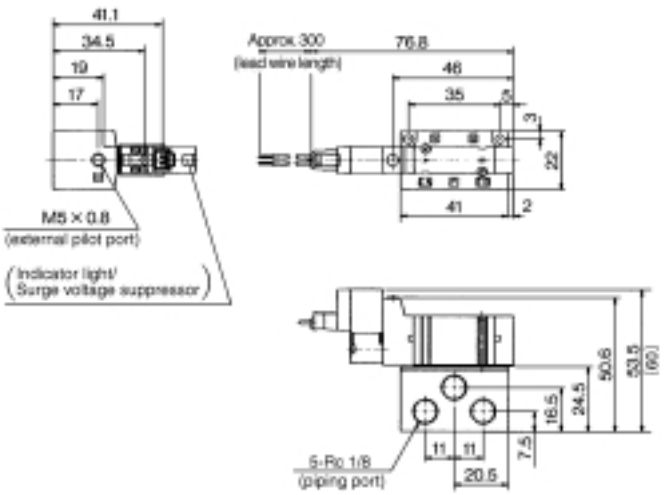

M type plug connector (M): SY3140(R)-□M□□-01

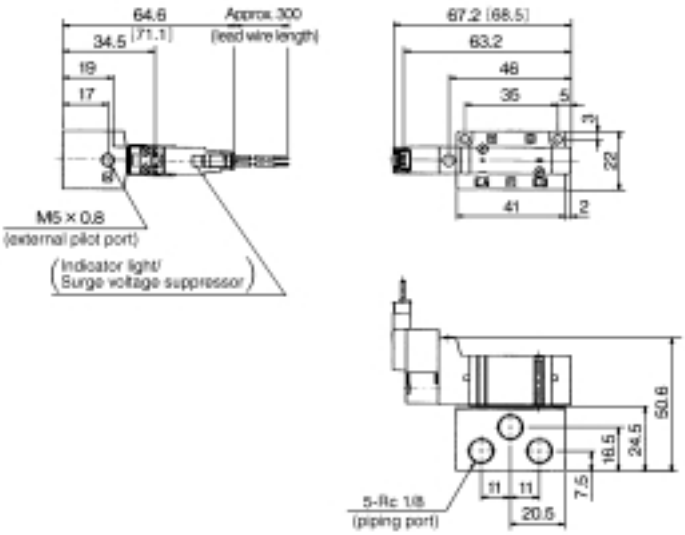

CAD

Grommet .....SS5Y31, #1 + #4
L type plug connector .....SS5Y31, #1 + #4 + #10
M type plug connector .....SS5Y31, #1 + #4 + #13

Series SY3000 Dimensions

Note) [ ]: Values for AC
< >: Values with surge voltage suppressor

Scale: 35%

2 position double
Grommet (G), (H): SY3240(R)-□G/H□□-01

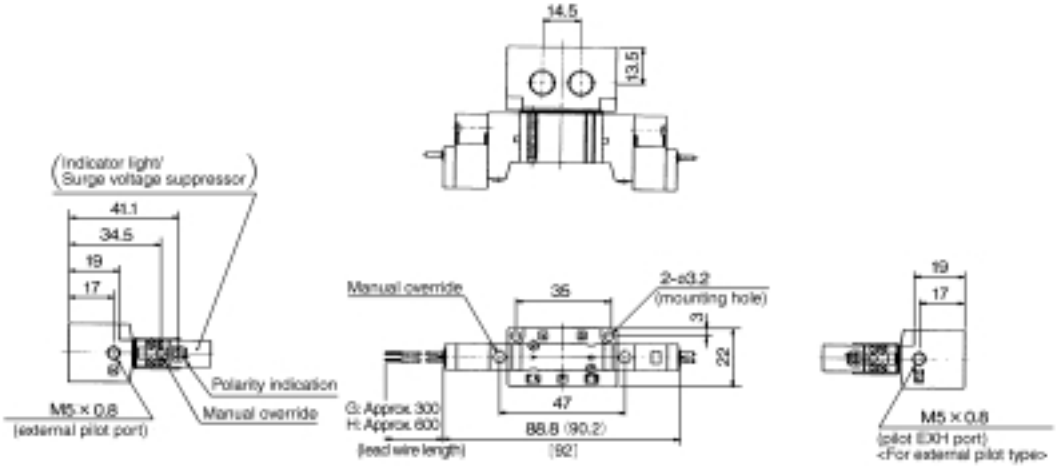

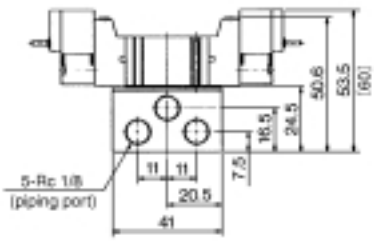

With interface regulator

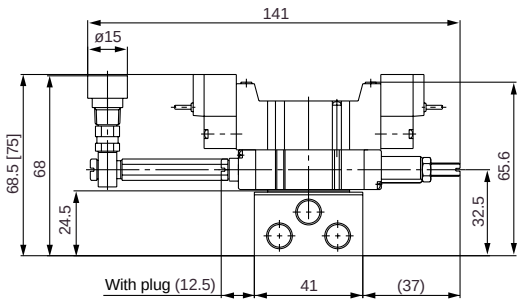

L type plug connector (L): SY3240(R)-□L□□-01

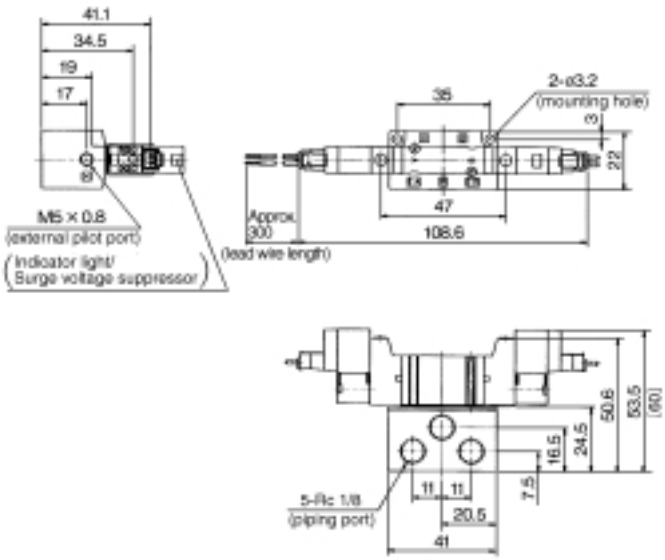

M type plug connector (M): SY3240(R)-□M□□-01

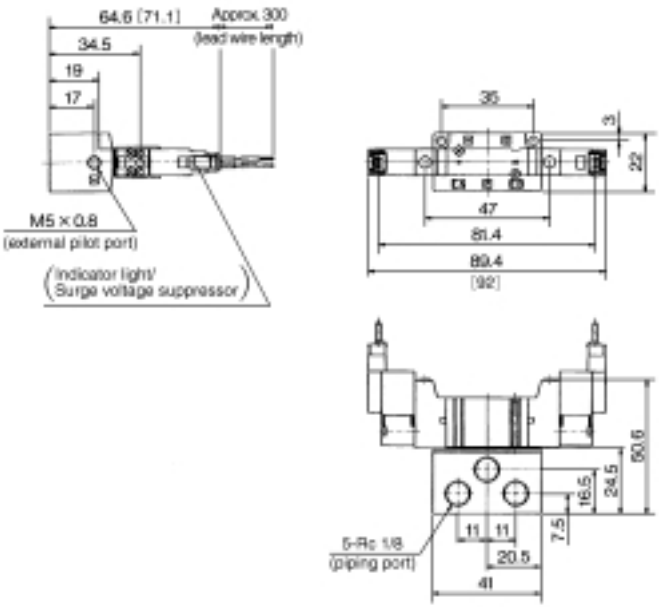

Grommet ..... SS5Y31, #2 + #4
L type plug connector ..... SS5Y31, #2 + #4 + #11
M type plug connector ..... SS5Y31, #2 + #4 + #14

CAD

Note) [ ]: Values for AC
< >: Values with surge voltage suppressor

3 position closed center/exhaust center/pressure center
Grommet (G), (H): SY3$^{3}_{4}$40(R)-□$^{G}_{H}$□□-01

Scale: 35%

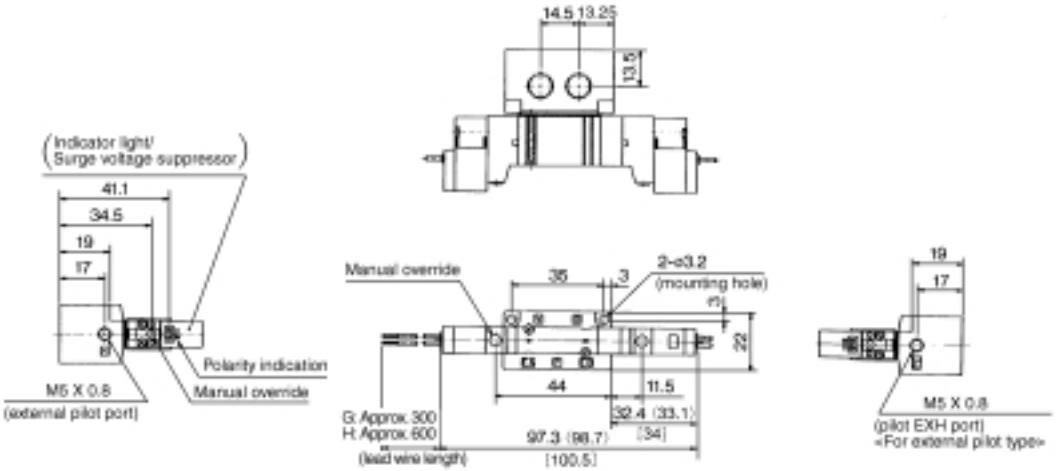

With interface regulator

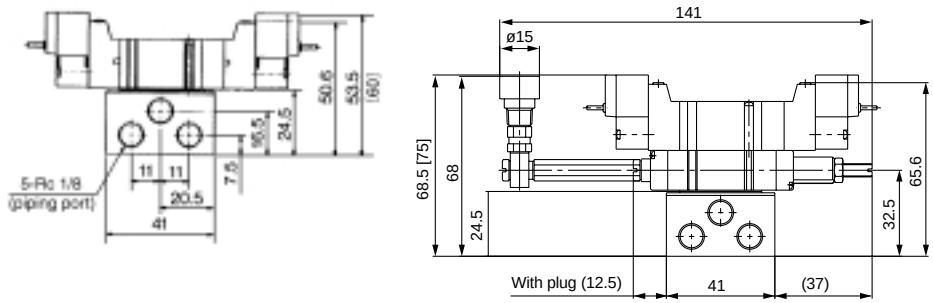

L type plug connector (L): SY3$^{3}_{4}$40(R)-□L□□-01

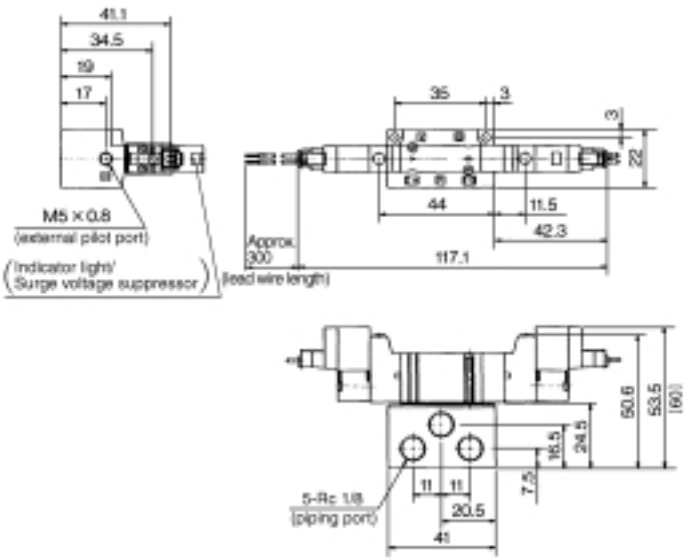

M type plug connector (M): SY3$^{3}_{4}$40(R)-□M□□-01

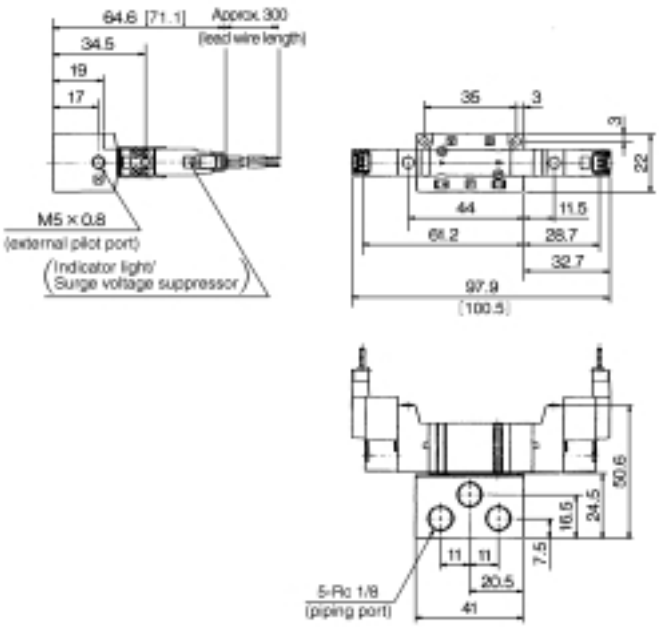

CAD
Grommet ..... SS5Y31, #3 + #4
L type plug connector ..... SS5Y31, #3 + #4 + #12
M type plug connector ..... SS5Y31, #3 + #4 + #15

Series SY5000 Dimensions

Note) [ ]: Values for AC
< >: Values with surge voltage suppressor

Scale: 35%

2 position single
Grommet (G), (H): SY5140(R)-□G/H□□-02

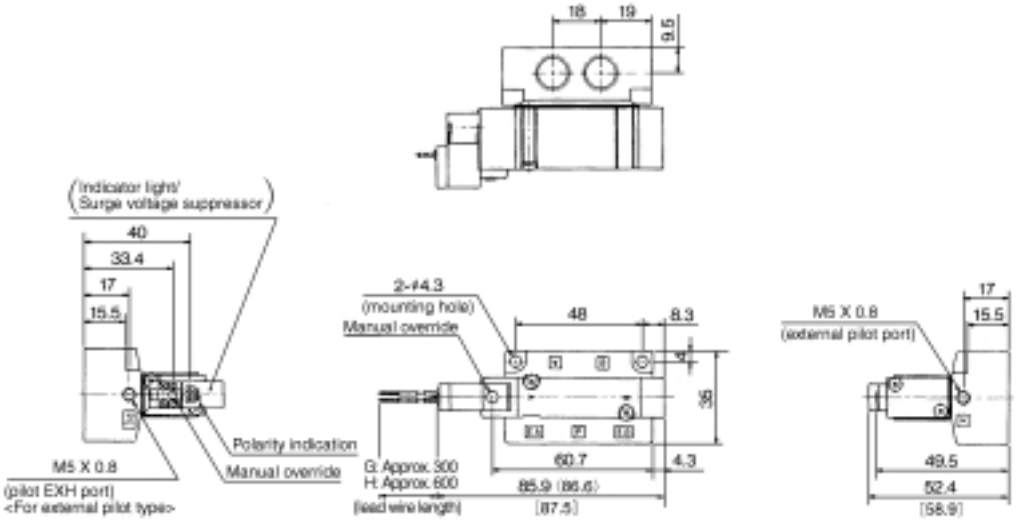

With interface regulator

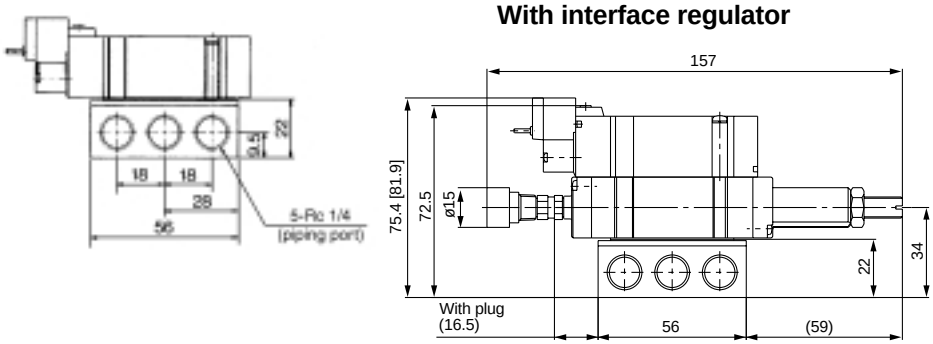

L type plug connector (L): SY5140(R)-□L□□-02

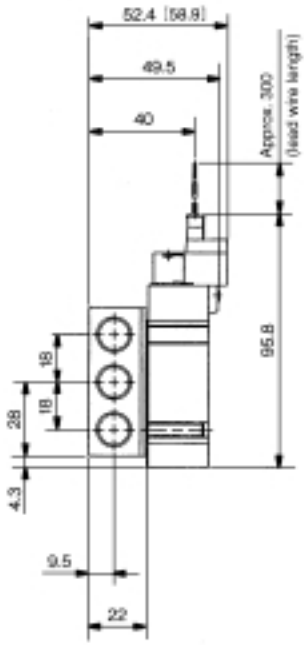

M type plug connector (M): SY5140(R)-□M□□-02

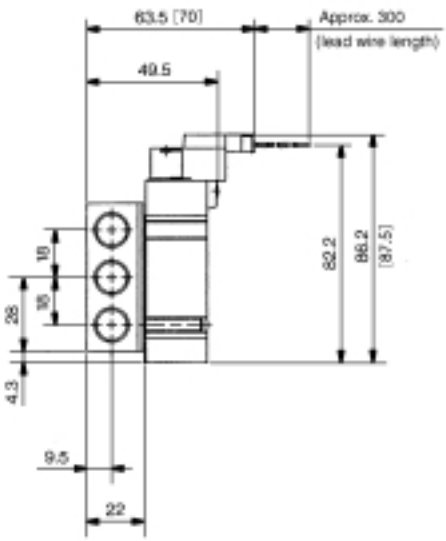

DIN terminal (D): SY5140(R)-□D□□-02

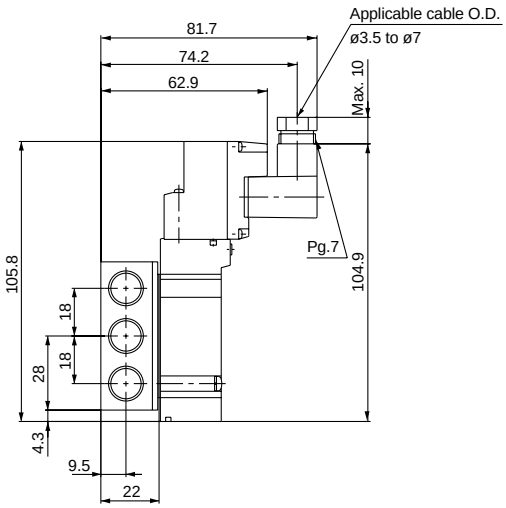

Grommet .....SS5Y51, #1 + #4
L type plug connector .....SS5Y51, #1 + #4 + #11
M type plug connector .....SS5Y51, #1 + #4 + #14

CAD

Note) [ ]: Values for AC
< >: Values with surge voltage suppressor

Scale: 35%

2 position double
Grommet (G), (H): SY5240(R)-□G/H□□-02

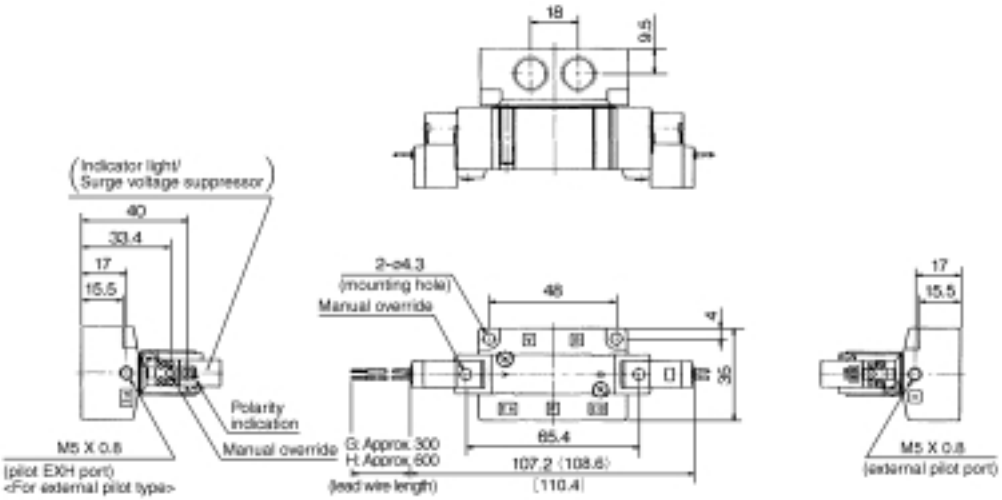

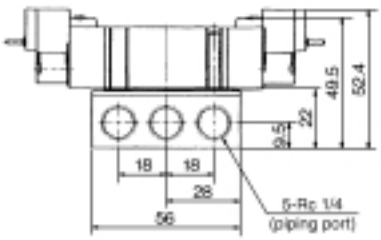

With interface regulator

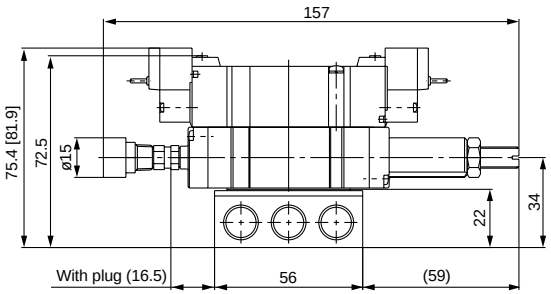

L type plug connector (L):
SY5240(R)-□L□□-02

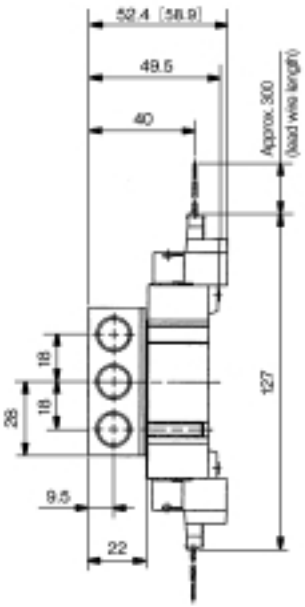

M type plug connector (M):
SY5240(R)-□M□□-02

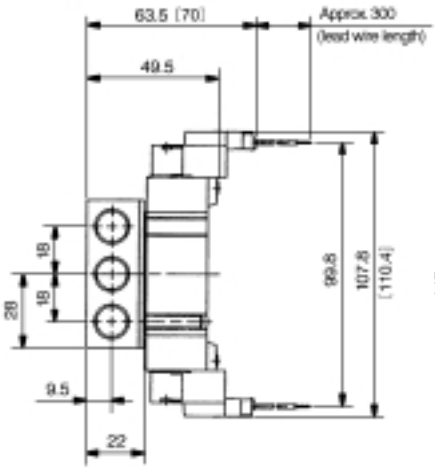

DIN terminal (D):
SY5240(R)-□D□□-02

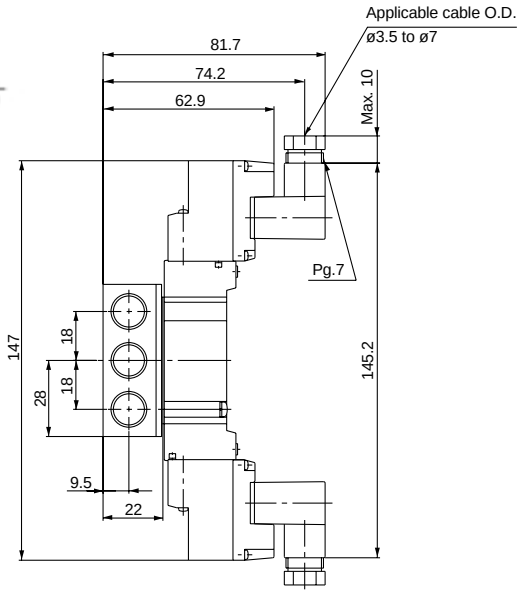

CAD
Grommet ..... SS5Y51, #2 + #4
L type plug connector ..... SS5Y51, #2 + #4 + #12
M type plug connector ..... SS5Y51, #2 + #4 + #15

Series SY5000 Dimensions

Note) [ ]: Values for AC
< >: Values with surge voltage suppressor

3 position closed center/exhaust center/pressure center
Grommet (G), (H): SY5$^{3}_{4}$40(R)-□$^{G}_{H}$□□-02

Scale: 35%

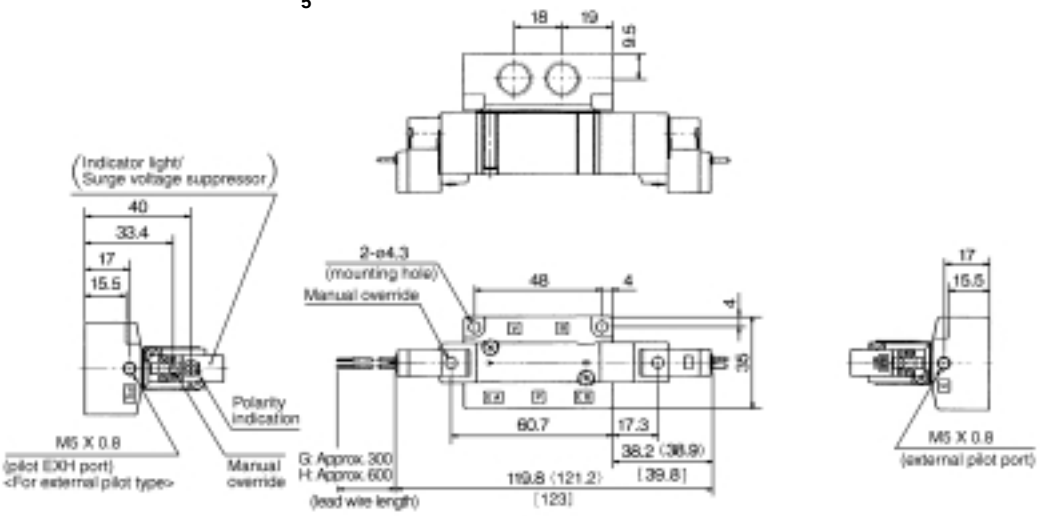

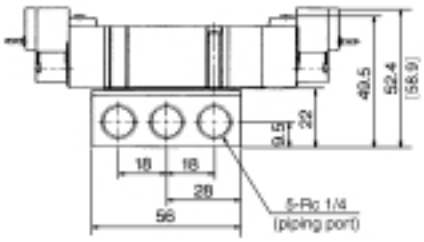

With interface regulator

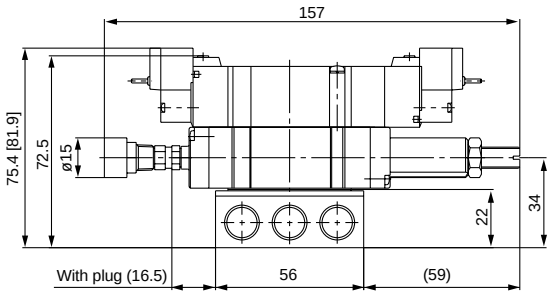

L type plug connector (L):
SY5$^{3}_{4}$40(R)-□L□□-02

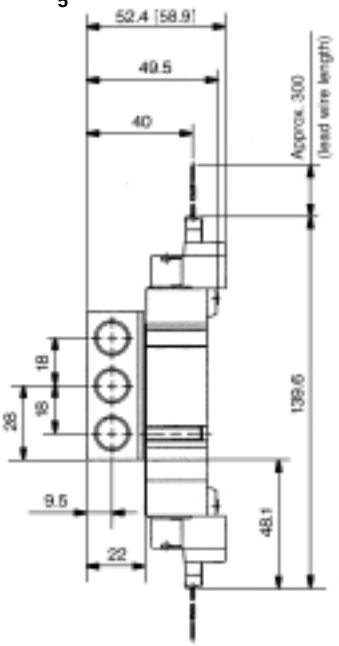

M type plug connector (M):
SY5$^{3}_{4}$40(R)-□M□□-02

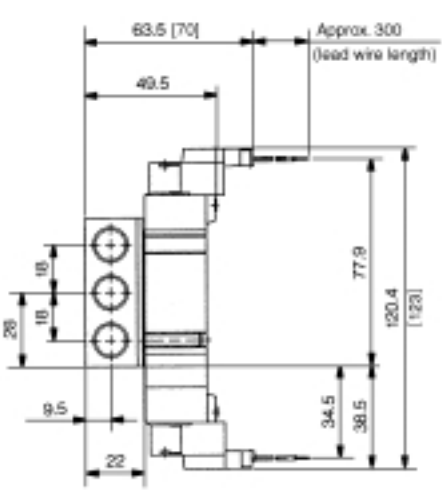

DIN terminal (D):
SY5$^{3}_{4}$40(R)-□D□□-02

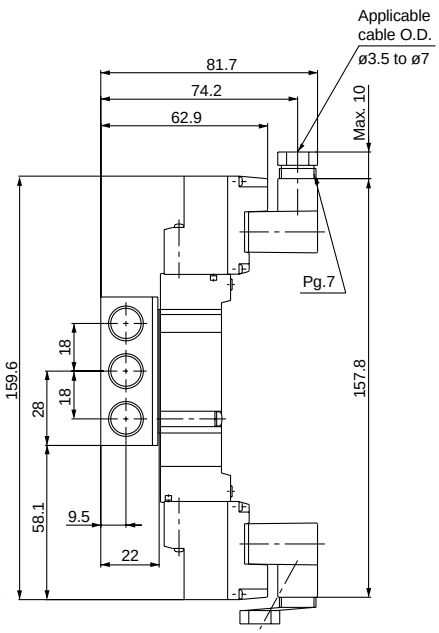

Grommet ..... SS5Y51, #3 + #4
L type plug connector ..... SS5Y51, #3 + #4 + #13
M type plug connector ..... SS5Y51, #3 + #4 + #16

Series SY7000 Dimensions

Note) [ ]: Values for AC
< >: Values with surge voltage suppressor

Scale: 35%

2 position single

Grommet (G), (H): SY7140(R)-□$^{G}_{H}$□□-$^{02}_{03}$

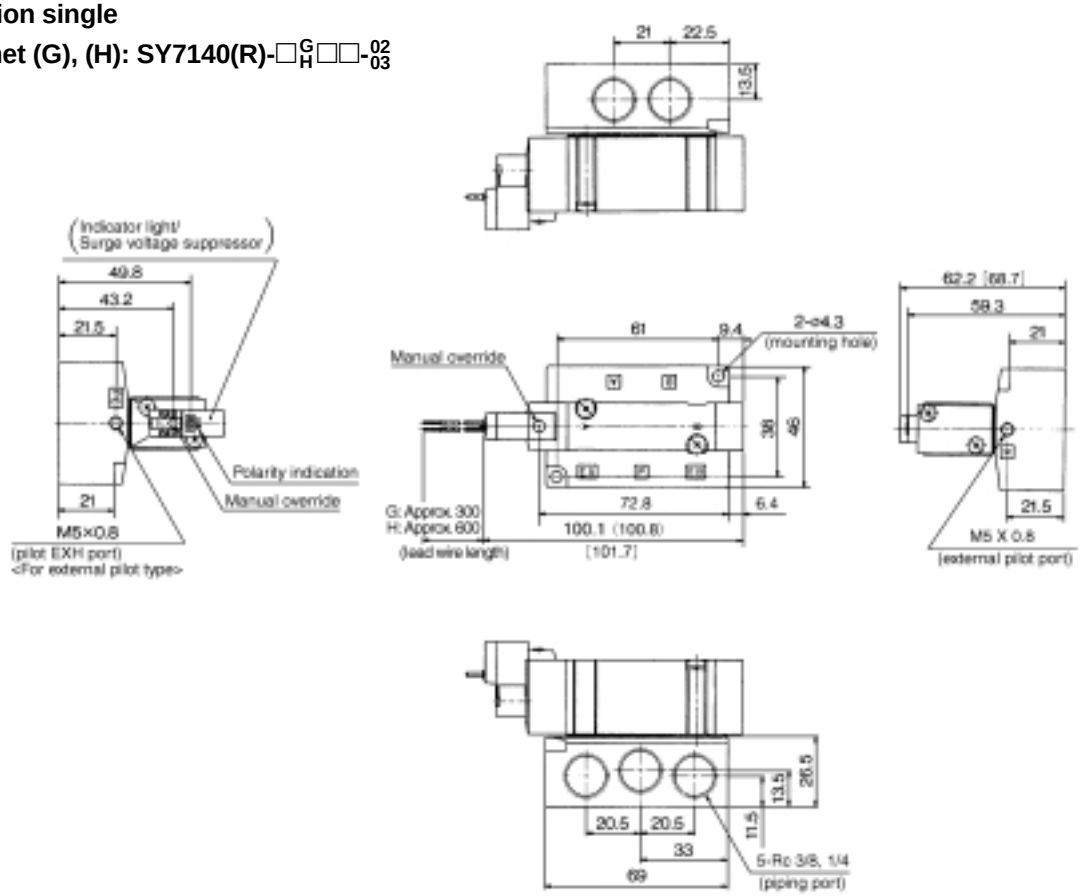

L type plug connector (L):
SY7140(R)-□L□□-$^{02}_{03}$

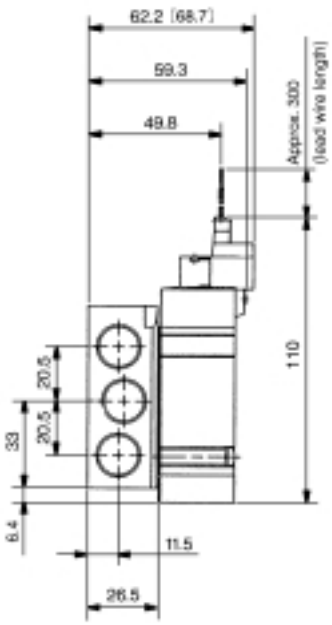

M type plug connector (M):
SY7140(R)-□M□□-$^{02}_{03}$

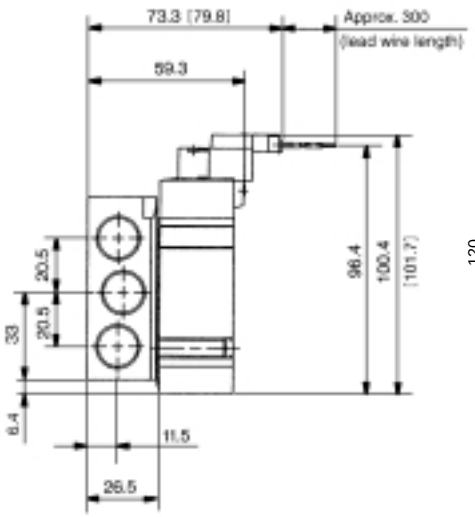

DIN terminal (D):
SY7140(R)-□D□□-$^{02}_{03}$

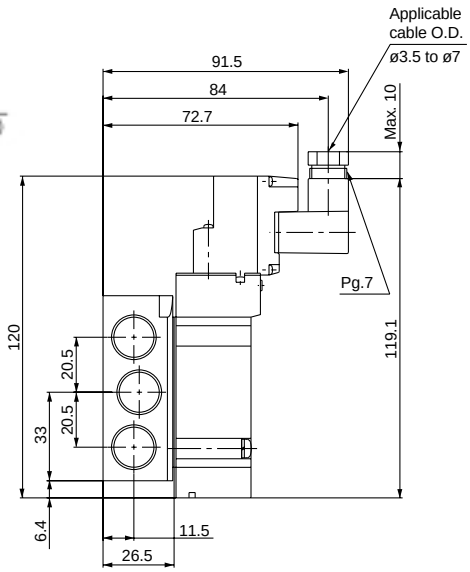

Grommet .....SS5Y71, #1
L type plug connector .....SS5Y71, #1 + #4 + #10
M type plug connector ..... SS5Y71, #1 + #4 + #13

Series SY7000 Dimensions

Note) [ ]: Values for AC
< >: Values with surge voltage suppressor

Scale: 35%

2 position double

Grommet (G), (H): SY7240(R)-□$^{G}_{H}$□□-$^{02}_{03}$

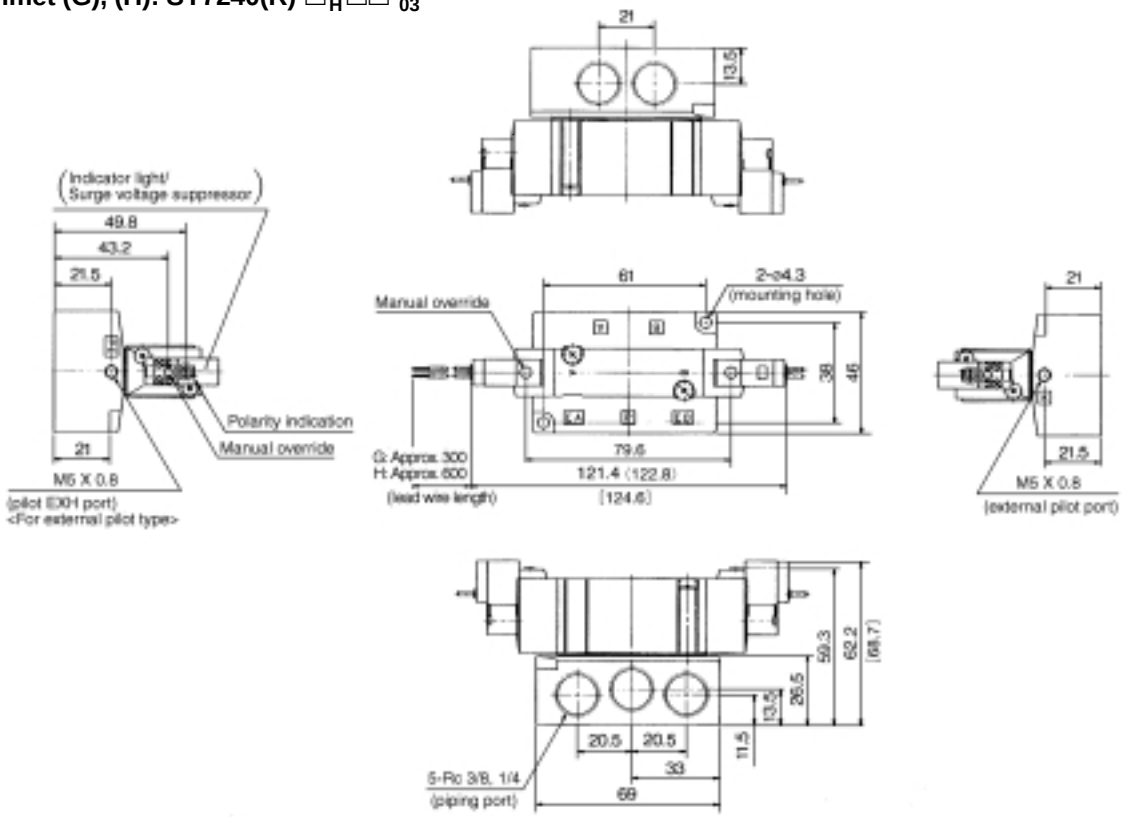

L type plug connector (L):
SY7240(R)-□L□□-$^{02}_{03}$

M type plug connector (M):
SY7240(R)-□M□□-$^{02}_{03}$

DIN terminal (D):
SY7240(R)-□D□□-$^{02}_{03}$

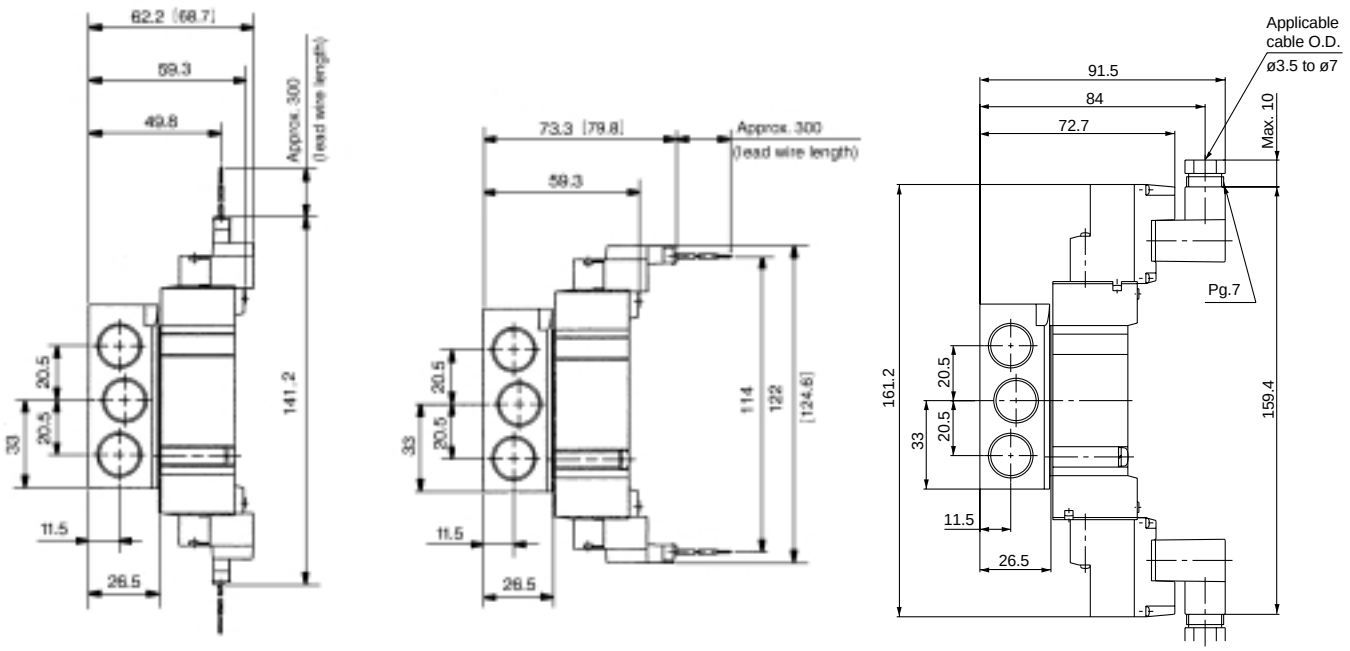

Grommet ..... SS5Y71, #2 + #4
L type plug connector ..... SS5Y71, #2 + #4 + #11
M type plug connector ..... SS5Y71, #2 + #4 + #15

CAD

Note) [ ]: Values for AC
< >: Values with surge voltage suppressor

3 position closed center/exhaust center/pressure center
Grommet (G), (H): SY7$^{3}_{4}_{5}$40(R)-□$^{G}_{H}$□□-$^{02}_{03}$

Scale: 35%

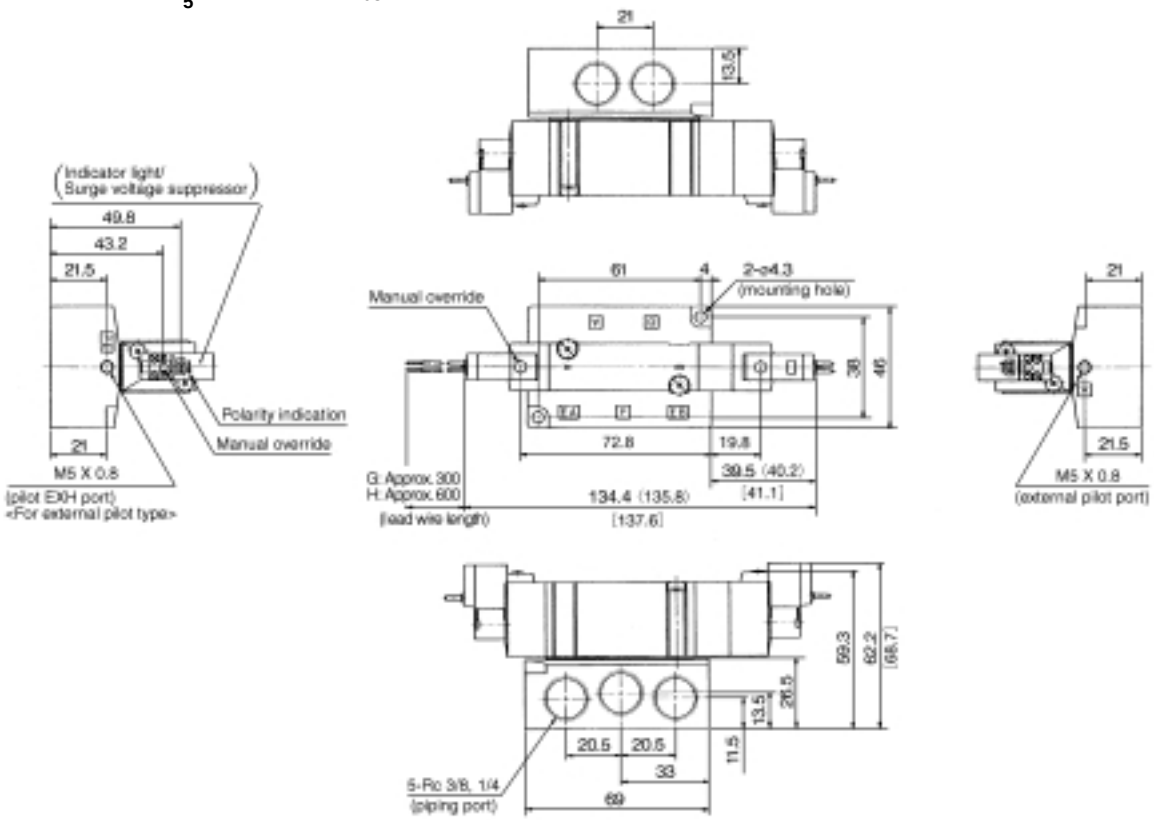

L type plug connector (L):
SY7$^{3}_{4}_{5}$40(R)-□L□□-$^{02}_{03}$

M type plug connector (M):
SY7$^{3}_{4}_{5}$40(R)-□M□□-$^{02}_{03}$

DIN terminal (D):
SY7$^{3}_{4}_{5}$40(R)-□D□□-$^{02}_{03}$

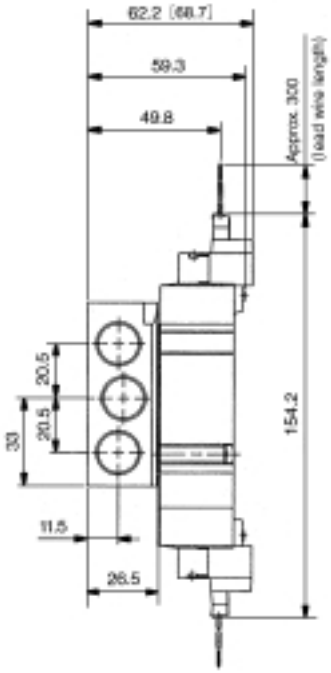

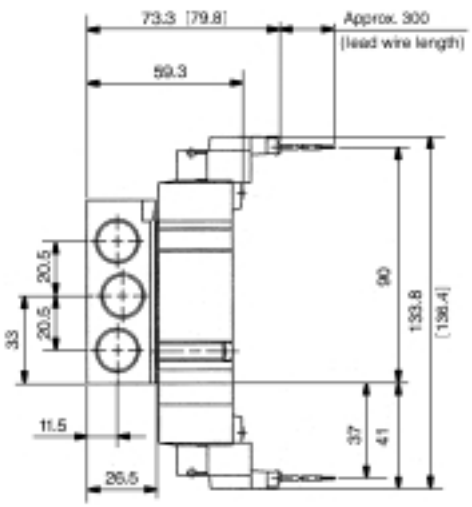

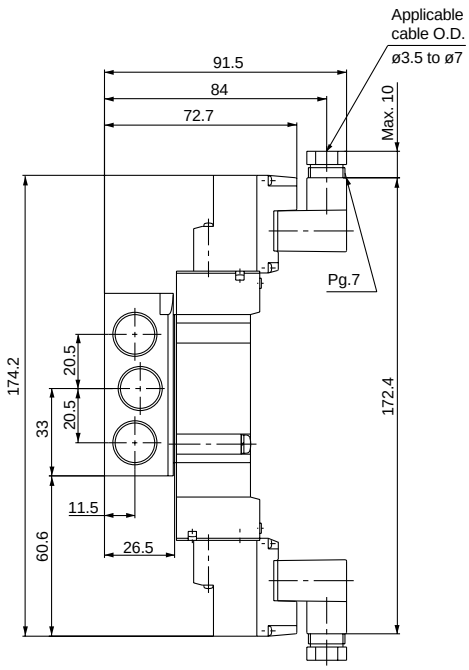

CAD
Grommet ..... SS5Y71, #3 + #4
L type plug connector ..... SS5Y71, #3 + #4 + #12
M type plug connector ..... SS5Y71, #3 + #4 + #15

Series SY9000 Dimensions

Note) [ ]: Values for AC
< >: Values with surge voltage suppressor

Scale: 35%

2 position single

Grommet (G), (H): SY9140(R)-□$^{G}_{H}$□□-$^{03}_{04}$

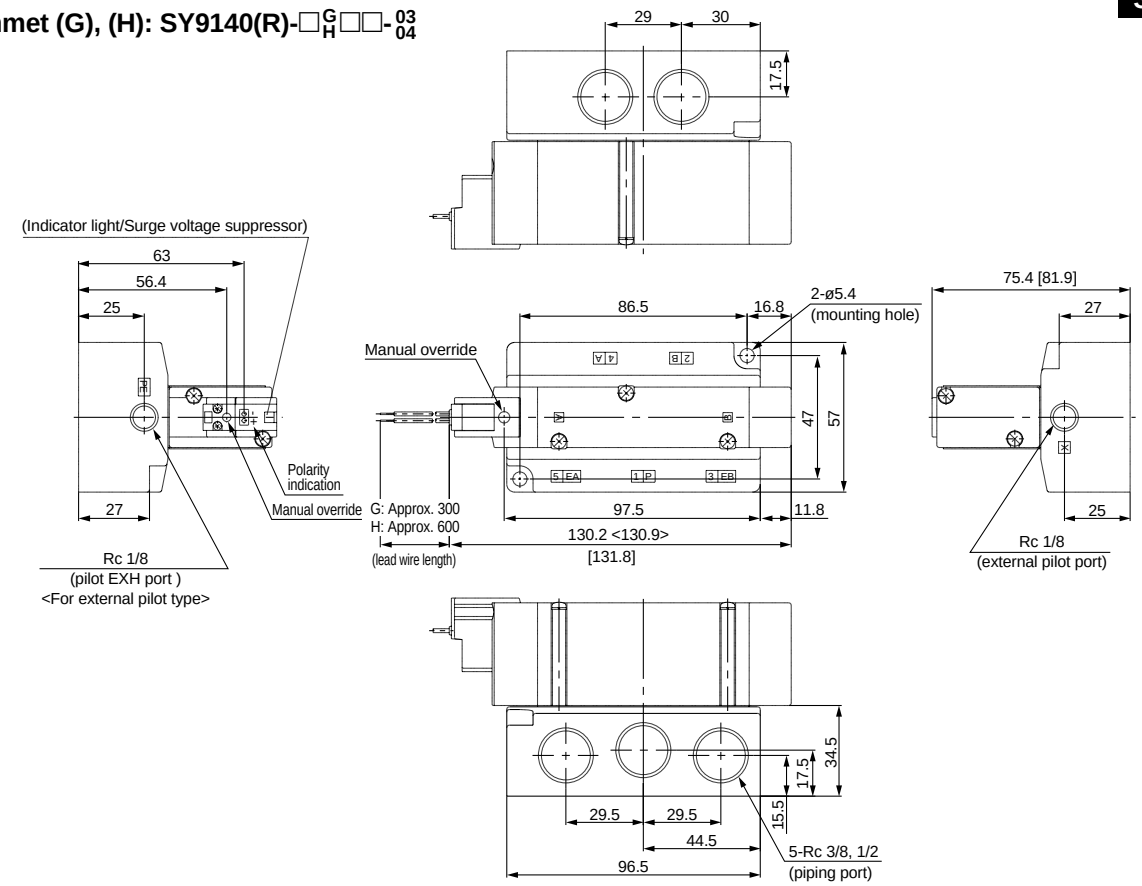

L type plug connector (L):

SY9140(R)-□L□□-$^{03}_{04}$

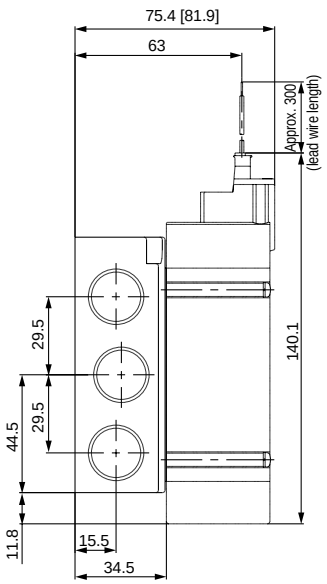

M type plug connector (M):

SY9140(R)-□M□□-$^{03}_{04}$

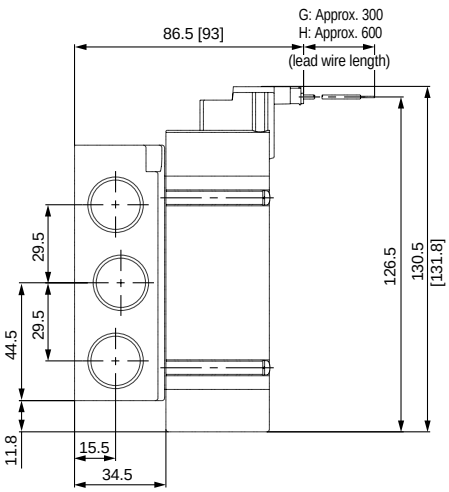

DIN terminal (D):

SY9140(R)-□D□□-$^{03}_{04}$

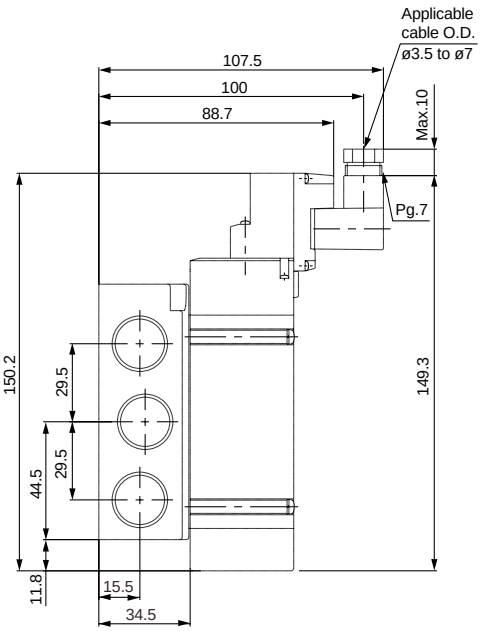

Note) [ ]: Values for AC
< >: Values with surge voltage suppressor

Series SY9000 Dimensions

2 position double

Grommet (G), (H): SY9240(R)-□$^{G}_{H}$□□-$^{03}_{04}$

Scale: 35%

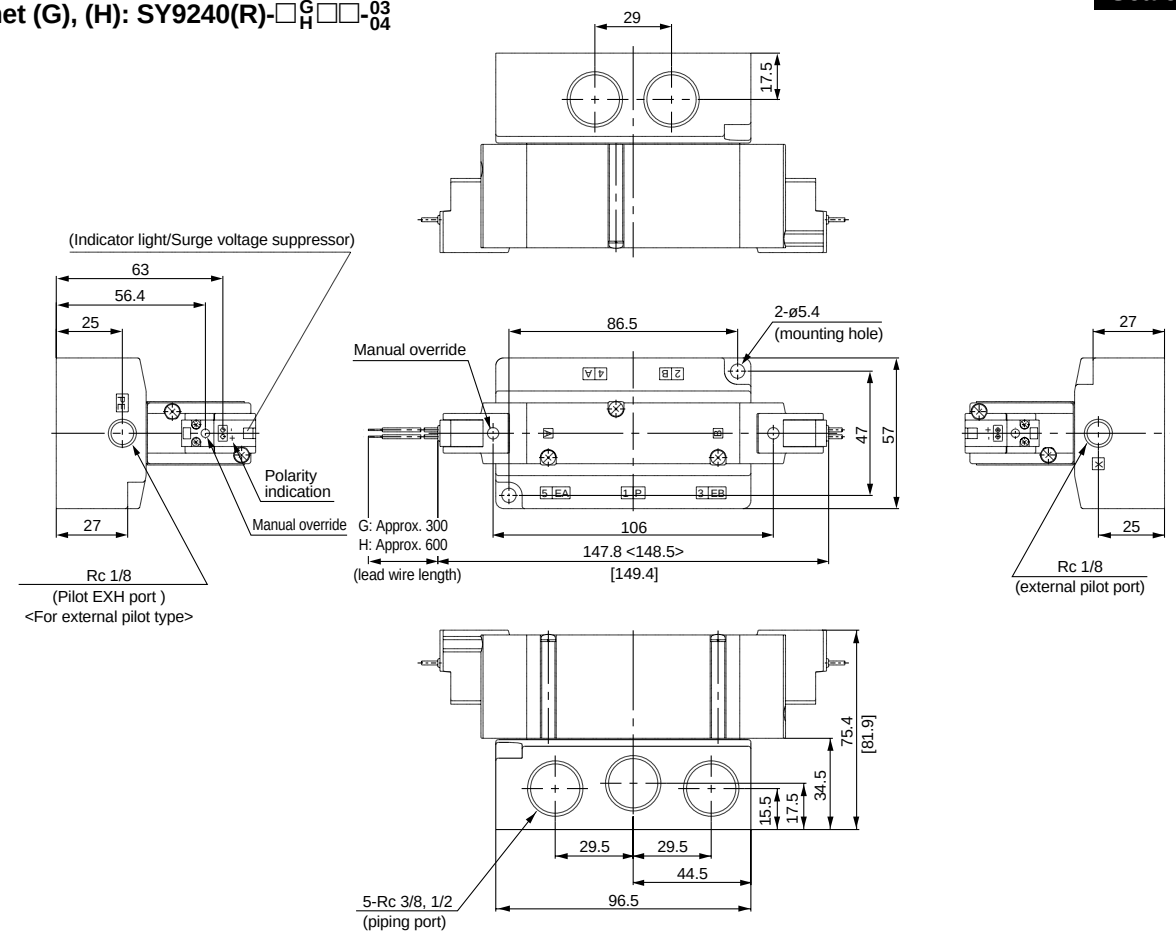

L type plug connector (L):

SY9240(R)-□L□□-$^{03}_{04}$

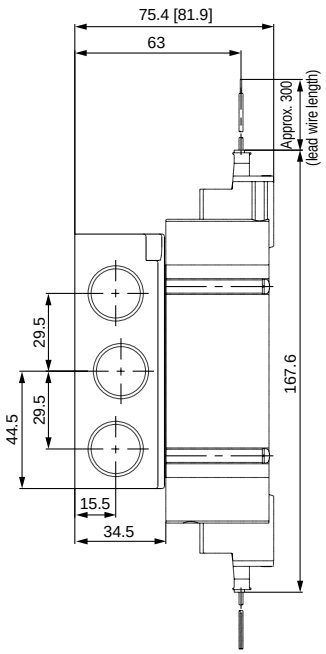

M type plug connector (M):

SY9240(R)-□M□□-$^{03}_{04}$

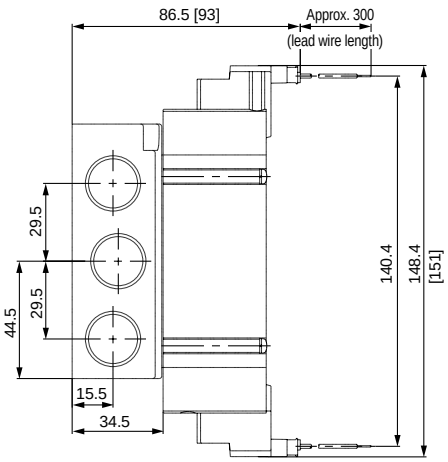

DIN terminal (D):

SY9240(R)-□D□□-$^{03}_{04}$

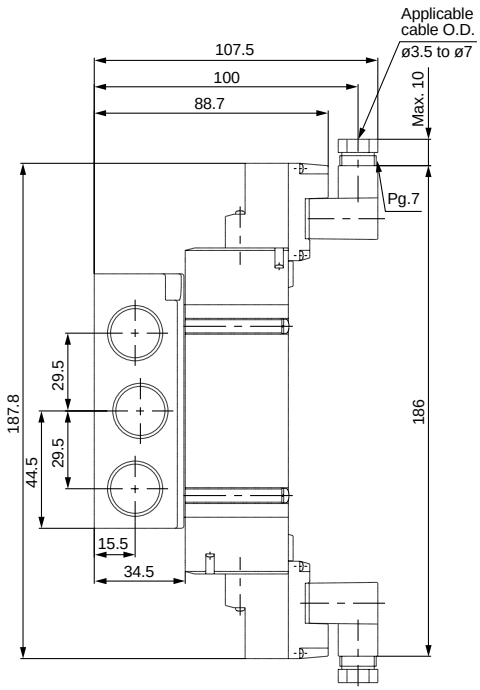

Series SY9000 Dimensions

Note) [ ]: Values for AC
< >: Values with surge voltage suppressor

3 position closed center/exhaust center/pressure center
Grommet (G), (H): SY9$^{3}_{4}_{5}$40(R)-□$^{G}_{H}$□□-$^{03}_{04}$

Scale: 35%

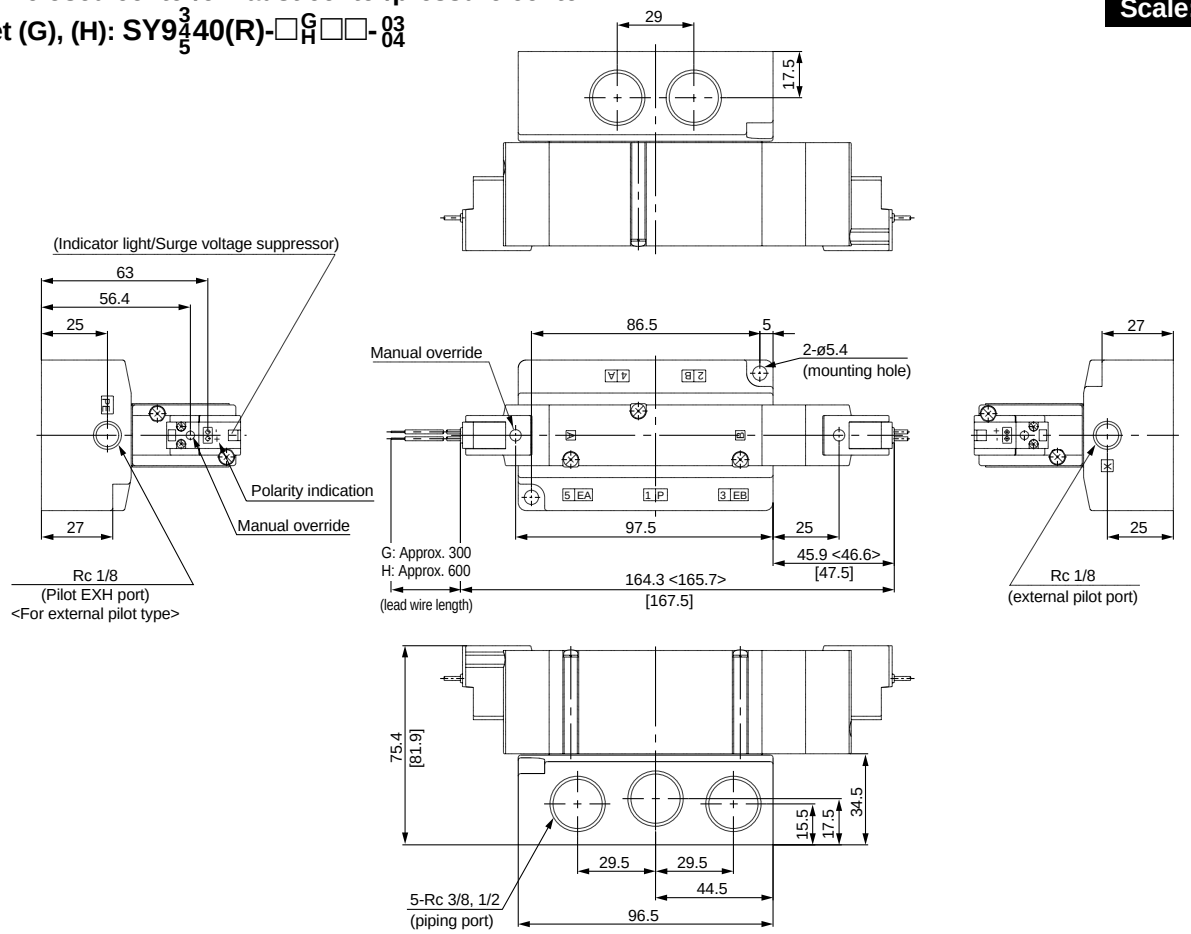

L type plug connector (L):
SY9$^{3}_{4}_{5}$40(R)-□L□□-$^{03}_{04}$

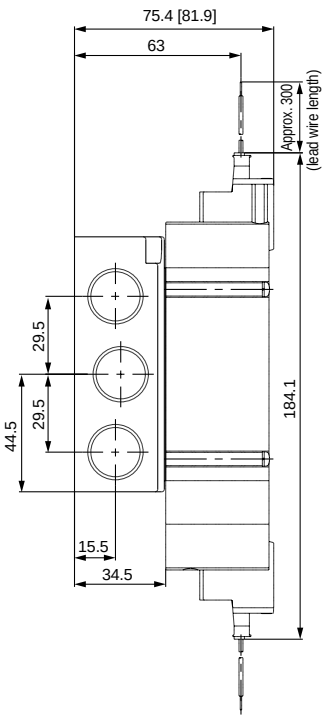

M type plug connector (M):
SY9$^{3}_{4}_{5}$40(R)-□M□□-$^{03}_{04}$

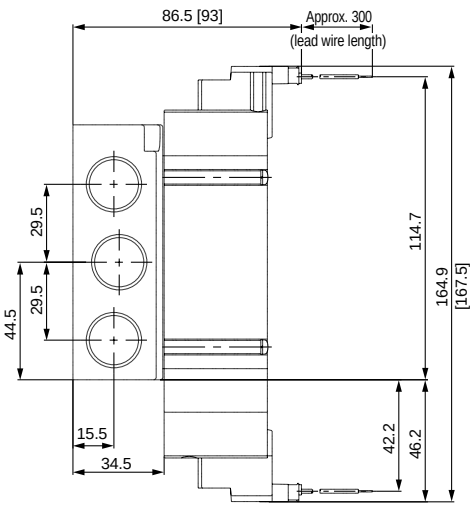

DIN terminal (D):
SY9$^{3}_{4}_{5}$40(R)-□D□□-$^{03}_{04}$

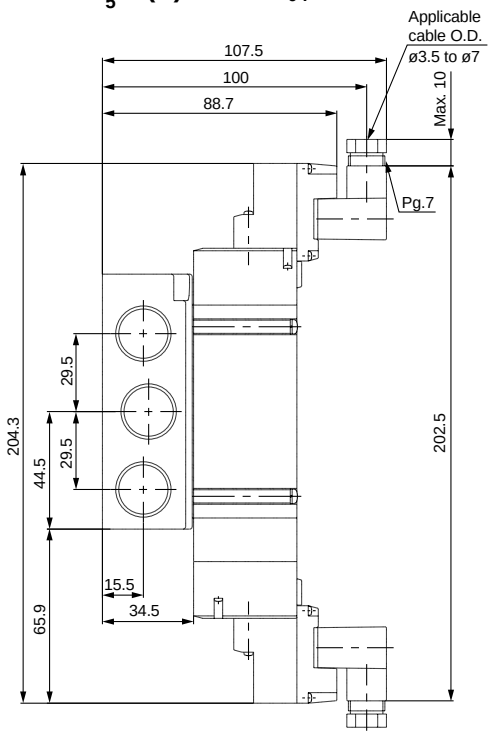

Type 20

SY3000/5000/7000
Body Ported Type Manifold
Bar Stock/Individual Wiring

How to Order Manifolds

SS5Y 5 — 20 — 05

Manifold series

3	SY3000
5	SY5000
7	SY7000

Stations

02	2 stations
⋮	⋮
20	20 stations

∗ Includes the number of blanking plate assemblies.

How to Order Manifold Assemblies (Example)

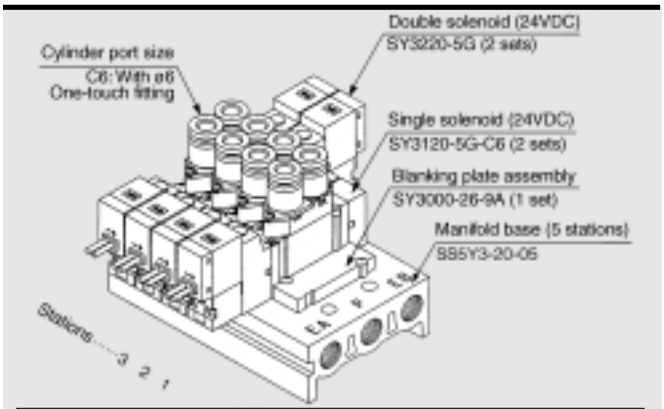

SS5Y3-20-05 ..... 1 set (Type 20, 5 station manifold base part no.)
∗ **SY3000-26-9A** ..... 1 set (Blanking plate assembly part no.)
∗ **SY3120-5G-C6** ..... 2 sets (Single solenoid part no.)
∗ **SY3220-5G-C6** ..... 2 sets (Double solenoid part no.)

→ To order valves and options mounted onto the manifold at the factory, list the valve/option with an asterisk (∗) in front of each part number.

Add the valve and option part numbers in order starting from the first station as shown above. When entry of part numbers becomes complicated, indicate on a manifold specification sheet. (Manifold Specification Sheet on pages 191 to 193)

How to Order Valves

SY 5 1 20 — 5 L ☐ ☐ — 01

Series

3	SY3000
5	SY5000
7	SY7000

Type of actuation

1	2 position single
2	2 position double
3	3 position closed center
4	3 position exhaust center
5	3 position pressure center

Rated voltage

DC specifications

5	24VDC
6	12VDC
V	6VDC
S	5VDC
R	3VDC

AC specifications (50/60Hz)

1	100VAC
2	200VAC
3	110VAC [115VAC]
4	220VAC [230VAC]

Note 1) DC specifications for "D" and "DO" are only available in 24VDC and 12VDC.
Note 2) "D" and "DO" are not available for SY3000.

Indicator light/Surge voltage suppressor

Electrical entry G, H, L, M

Nil	Without indicator light/surge voltage suppressor
S	With surge voltage suppressor
Z	With indicator light/surge voltage suppressor
R	With surge voltage suppressor (non-polar type)
U	With indicator light/surge voltage suppressor (non-polar type)

Note 1) For AC, there is no "S" specification, since it is integrated with the rectifier.
Note 2) "R" and "U" are available for DC only.

Electrical entry D

Nil	Without indicator light/surge voltage suppressor
S	With surge voltage suppressor (non-polar type)
Z	With indicator light/surge voltage suppressor (non-polar type)

Note 1) "DOZ" is not available.
Note 2) For AC, there is no "S" specification, since it is integrated with the rectifier.

Port size

Symbol	Port size	Applicable series
M5	M5 x 0.8	SY3000
C4	ø4 One-touch fitting	
C6	ø6 One-touch fitting	
01	Rc 1/8	SY5000
C4	ø4 One-touch fitting	
C6	ø6 One-touch fitting	
C8	ø8 One-touch fitting	
02	Rc 1/4	SY7000
C8	ø8 One-touch fitting	
C10	ø10 One-touch fitting	

Manual override

Nil	Non-locking push type
D	Push-turn locking slotted type
E	Push-turn locking lever type

Electrical entry

24V, 12V, 6V, 5V, 3VDC/100V, 110V, 200V, 220VAC			24V, 12VDC 100V, 110V, 200V, 220VAC
Grommet	**L type plug connector**	**M type plug connector**	**DIN terminal**
G: Lead wire length 300mm **H:** Lead wire length 600mm	**L:** With lead wire (length 300mm) **LN:** Without lead wire **LO:** Without connector	**M:** With lead wire (length 300mm) **MN:** Without lead wire **MO:** Without connector	**(Except SY3000)** **D:** With connector **DO:** Without connector

Note 1) "LN" and "MN" include 2 sockets.
Note 2) "D" and "DO" are not available for SY3000.
Note 3) DIN43650C standard DIN terminal "Y" is also available. Refer to page 189 for details.

Note) When single body ported solenoid valves are ordered, manifold mounting bolts and gaskets are not included. Order them separately if necessary. (Refer to page 56 for details.)

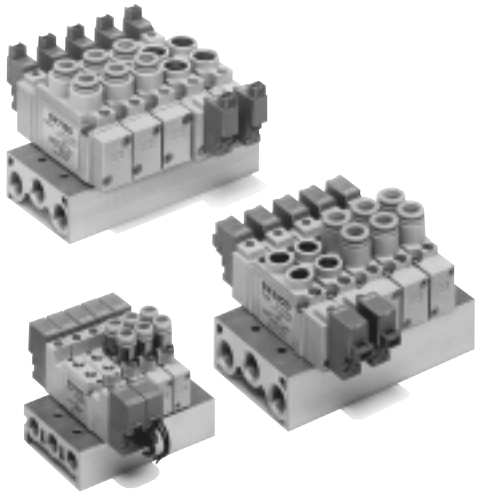

Manifold specifications

Model		SS5Y3-20	SS5Y5-20	SS5Y7-20
Applicable valve		SY3□20	SY5□20	SY7□20
Manifold type		Single base type/B mount		
P (SUP)/R (EXH) method		Common SUP/EXH		
Valve stations		2 to 20 stations Note 1)		
A, B port location		Valve		
Port size	P, EA, EB port	Rc 1/8	Rc 1/4	Rc 1/4
	A, B port	M5 x 0.8 C4 (ø4 One-touch fitting) C6 (ø6 One-touch fitting)	Rc 1/8 C4 (ø4 One-touch fitting) C6 (ø6 One-touch fitting) C8 (ø8 One-touch fitting)	Rc 1/4 C8 (ø8 One-touch fitting) C10 (ø10 One-touch fitting)
Valve effective area Note 2) mm^2 (Cv factor)		C6: P to A/B 3.6 (0.2) A/B to EA/EB 4.14 (0.23)	C8: P to A/B 9.18 (0.51) A/B to EA/EB 9.9 (0.55)	C10: P to A/B 15.84 (0.88) A/B to EA/EB 14.94 (0.83)
Manifold base weight W (g) n: Number of stations		W = 13n + 35	W = 36n + 64	W = 43n + 64

Note 1) For 10 stations or more (5 stations or more in case of SS5Y7), supply pressure to P port on both sides and exhaust from EA and EB ports on both sides.

Note 2) Value when manifold base (5 stations) is mounted, with single action 2 position type.

Note 3) Refer to page 56 for manifold options.

SY3000: SS5Y3-20-Stations

Note) [ ]: Values for AC
< >: Values with surge voltage suppressor

Grommet (G)

Scale: 35%

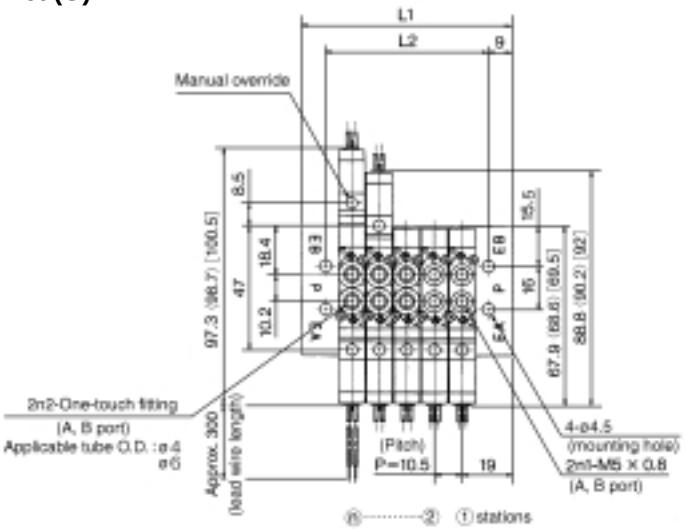

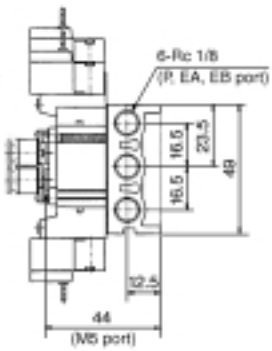

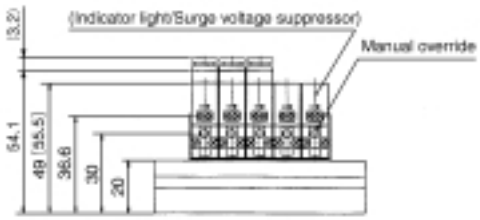

Dimensions when mounting individual EXH spacer

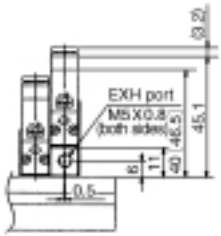

Dimensions when mounting individual SUP spacer
(SUP port is at the end plate side of the single solenoid.)

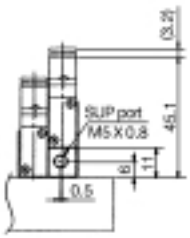

L type plug connector (L)

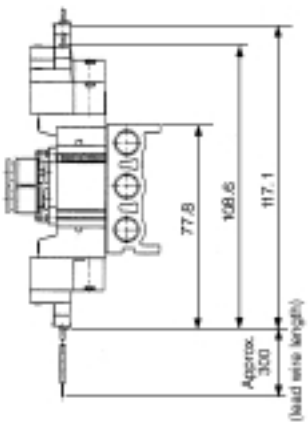

M type plug connector (M)

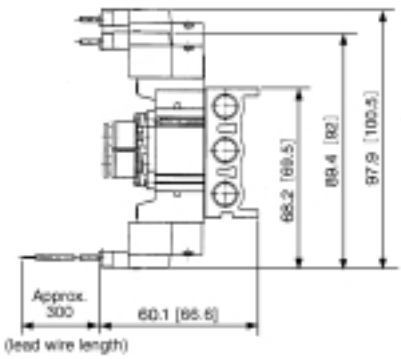

Stations n	2	3	4	5	6	7	8	9	10	11	12	13	14	15	16	17	18	19	20
L1	48.5	59	69.5	80	90.5	101	111.5	122	132.5	143	153.5	164	174.5	185	195.5	206	216.5	227	237.5
L2	30.5	41	51.5	62	72.5	83	93.5	104	114.5	125	135.5	146	156.5	167	177.5	188	198.5	209	219.5

Type 20 manifold ... SS5Y32, #1

SY5000: SS5Y5-20-Stations

CAD

Note) [ ]: Values for AC
< >: Values with surge voltage suppressor

Grommet (G)

Scale: 35%

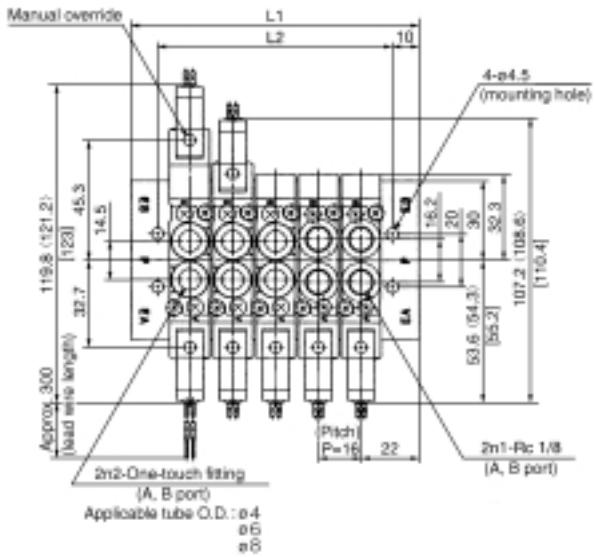

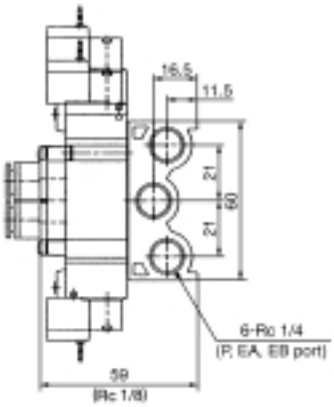

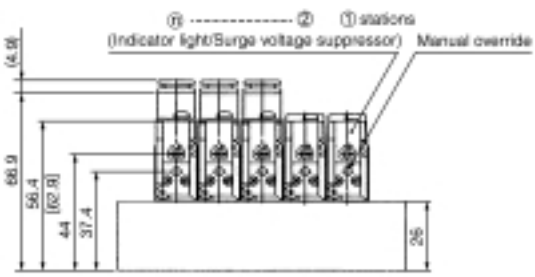

Dimensions when mounting individual EXH spacer

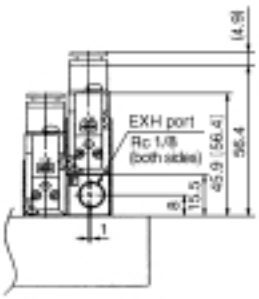

Dimensions when mounting individual SUP spacer
(SUP port is at the end plate side of the single solenoid.)

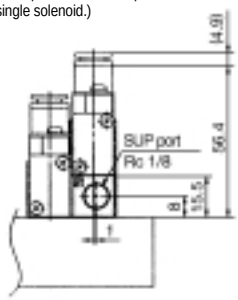

L type plug connector (L)

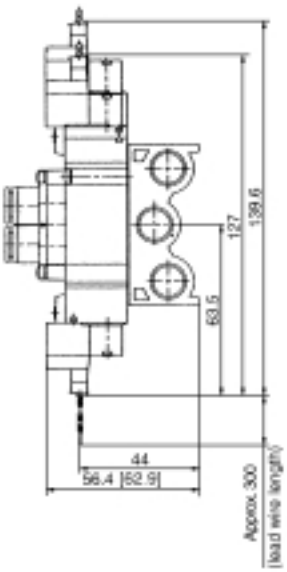

M type plug connector (M)

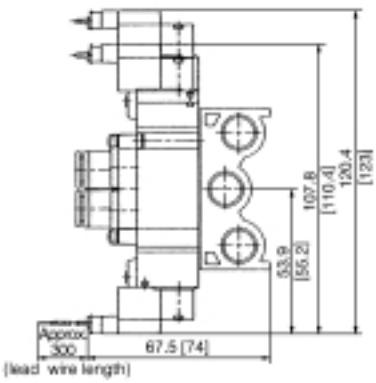

DIN terminal (D)

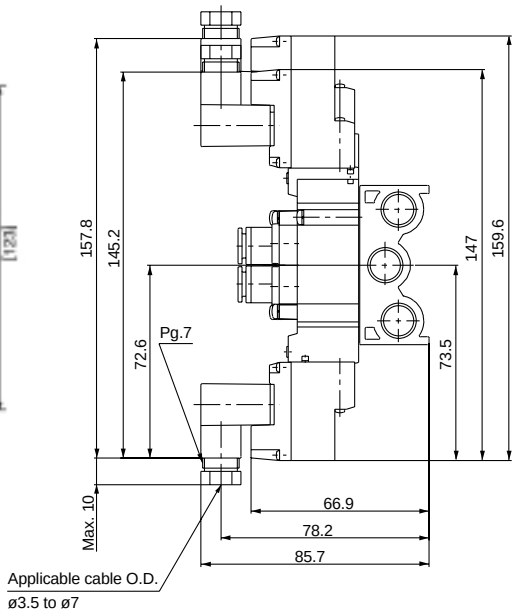

Stations n	2	3	4	5	6	7	8	9	10	11	12	13	14	15	16	17	18	19	20
L1	60	76	92	108	124	140	156	172	188	204	220	236	252	268	284	300	316	332	348
L2	40	56	72	88	104	120	136	152	168	184	200	216	232	248	264	280	296	312	328

CAD Type 20 manifold ... SS5Y52, #1

SY7000: SS5Y7-20-Stations

Note) [ ]: Values for AC
< >: Values with surge voltage suppressor

Grommet (G)

Scale: 35%

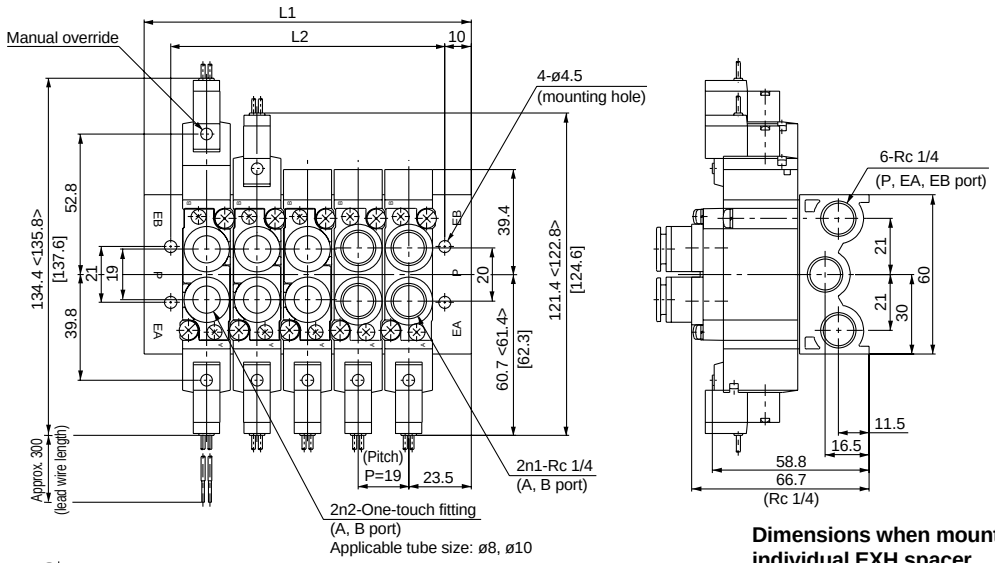

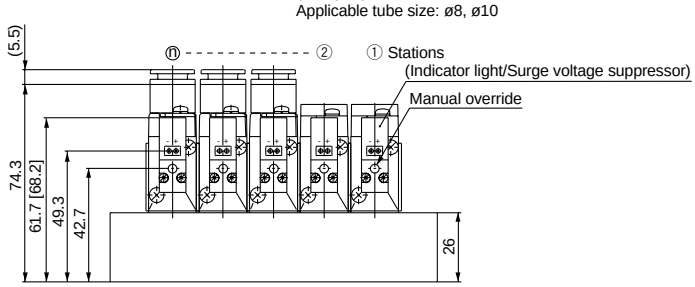

Dimensions when mounting individual EXH spacer

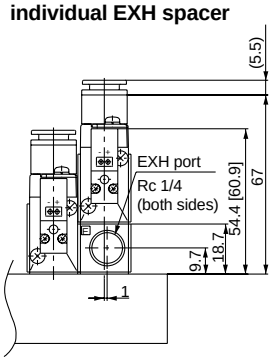

Dimensions when mounting individual SUP spacer
(SUP port is at the end plate side of the single solenoid.)

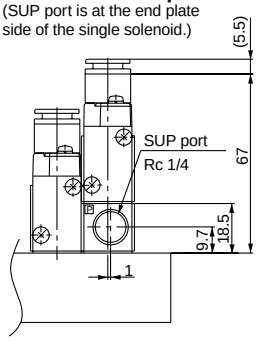

L type plug connector (L)

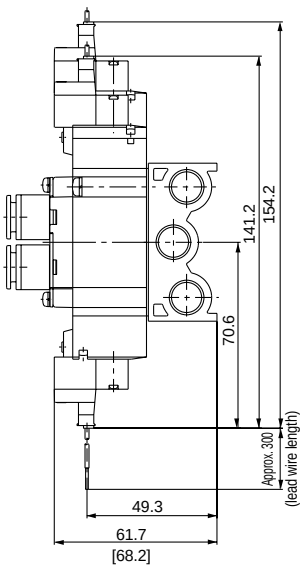

M type plug connector (M)

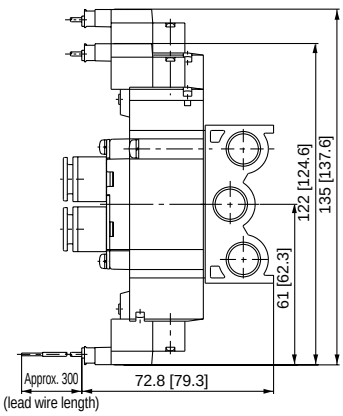

DIN terminal (D)

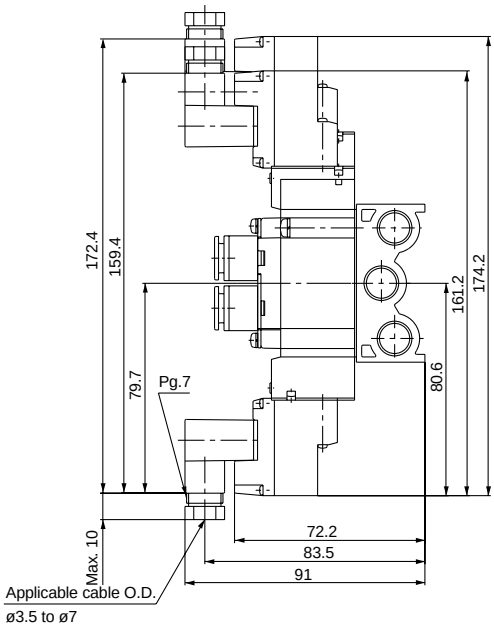

Stations n	2	3	4	5	6	7	8	9	10	11	12	13	14	15	16	17	18	19	20
L1	66	85	104	123	142	161	180	199	218	237	256	275	294	313	332	351	370	389	408
L2	46	65	84	103	122	141	160	179	198	217	236	255	274	293	312	331	350	369	388

Type 20 manifold ... SS5Y72, #1

Type 23

SY9000
Body Ported Type Manifold
Stacking Type/Individual Wiring

How to Order Manifolds

SS5Y 9 — 23 — 05 — [ ]

Manifold series

9	SY9000

Stations

Symbol	Stations
02	2 stations
⋮	⋮
20	20 stations

∗ Includes the number of blanking plate assemblies.

Option

Symbol	Mounting
Nil	Direct mount
D	DIN rail mount (with DIN rail)
DO	DIN rail mount (without DIN rail)
D∗	When a DIN rail longer than the specified stations is necessary, indicate the number of required stations at the "∗" symbol.

∗ Type 23 manifolds for SY9000 have common internal and external pilots.

How to Order Manifold Assemblies (Example)

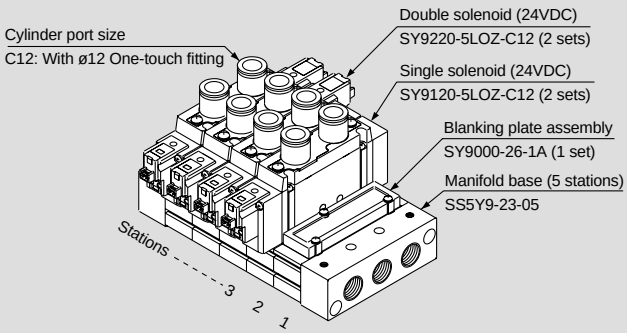

SS5Y9-23-05 ..... 1 set (Type 23, 5 station manifold base part no.)
∗**SY9000-26-1A** ..... 1 set (Blanking plate assembly part no.)
∗**SY9120-5LOZ-C12** ..... 2 sets (Single solenoid part no.)
∗**SY9220-5LOZ-C12** ..... 2 sets (Double solenoid part no.)

→ To order valves and options mounted onto the manifold at the factory, list the valve/option with an asterisk (∗) in front of each part number.

Add the valve and option part numbers in order starting from the first station as shown above. When entry of part numbers becomes complicated, indicate on a manifold specification sheet. (Manifold Specification Sheet on page 194)

How to Order Valves

SY 9 1 20 [ ] — 5 L [ ] [ ] — 02

Series

9	SY9000

Type of actuation

1	2 position single
2	2 position double
3	3 position closed center
4	3 position exhaust center
5	3 position pressure center

Pilot specification

Nil	Internal pilot
R	External pilot

∗ External pilot specification is not available for single unit.

Rated voltage

DC specifications

5	24VDC
6	12VDC
V	6VDC
S	5VDC
R	3VDC

AC specifications (50/60Hz)

1	100VAC
2	200VAC
3	110VAC [115VAC]
4	220VAC [230VAC]

∗ DC specifications for "D" and "DO" are only available in 24VDC and 12VDC.

Indicator light/Surge voltage suppressor

Electrical entry G, H, L, M

Nil	Without indicator light/surge voltage suppressor
S	With surge voltage suppressor
Z	With indicator light/surge voltage suppressor
R	With surge voltage suppressor (non-polar type)
U	With indicator light/surge voltage suppressor (non-polar type)

Note 1) For AC, there is no "S" specification, since it is integrated with the rectifier.
Note 2) "R" and "U" are available for DC only.

Electrical entry D

Nil	Without indicator light/surge voltage suppressor
S	With surge voltage suppressor (non-polar type)
Z	With indicator light/surge voltage suppressor (non-polar type)

Note 1) "DOZ" is not available.
Note 2) For AC, there is no "S" specification, since it is integrated with the rectifier.

Port size

Symbol	Port size
C8	ø8 One-touch fitting
C10	ø10 One-touch fitting
C12	ø12 One-touch fitting
02	Rc 1/4
03	Rc 3/8

Manual override

Nil	Non-locking push type
D	Push-turn locking slotted type
E	Push-turn locking lever type

Electrical entry

24V, 12V, 6V, 5V, 3VDC/100V, 110V, 200V, 220VAC			24V, 12VDC 100V, 110V, 200V, 220VAC
Grommet	**L type plug connector**	**M type plug connector**	**DIN terminal**
G: Lead wire length 300mm **H:** Lead wire length 600mm	**L:** With lead wire (length 300mm) **LN:** Without lead wire **LO:** Without connector	**M:** With lead wire (length 300mm) **MN:** Without lead wire **MO:** Without connector	**D:** With connector **DO:** Without connector

Note 1) "LN" and "MN" include 2 sockets.
Note 2) DIN43650C standard DIN terminal "Y" is also available. Refer to page 189 for details.

Note) When single body ported solenoid valves are ordered, manifold mounting bolts and gaskets are not included. Order them separately if necessary. (Refer to page 56 for details.)

Manifold specifications

Model		SS5Y9-23
Applicable valve		SY9□20
Manifold type		Stacking type
P (SUP)/R (EXH) method		Common SUP/EXH
Valve stations		2 to 20 stations Note 1)
A, B port location		Valve
Port size	P, EA, EB port	Rc 3/8
	A, B port	Rc 1/4 Rc 3/8 C8 (ø8 One-touch fitting) C10 (ø10 One-touch fitting) C12 (ø12 One-touch fitting)
Valve effective area Note 2) mm² (Cv factor)		C12: P to A/B 35.41 (1.97) A/B to EA/EB 30.55 (1.70)
Manifold base weight W (g) n: Number of stations		W = 66n + 246

Note 1) For 10 stations or more, supply pressure to P port on both sides and exhaust from EA and EB ports on both sides.

Note 2) Value when manifold base (5 stations) is mounted, with single action of 2 position type.

Note 3) Refer to page 56 for manifold options.

SY9000: SS5Y9-23-Stations-(D)

Note) [ ]: Values for AC
< >: Values with surge voltage suppressor

Grommet (G)

Scale: 30%

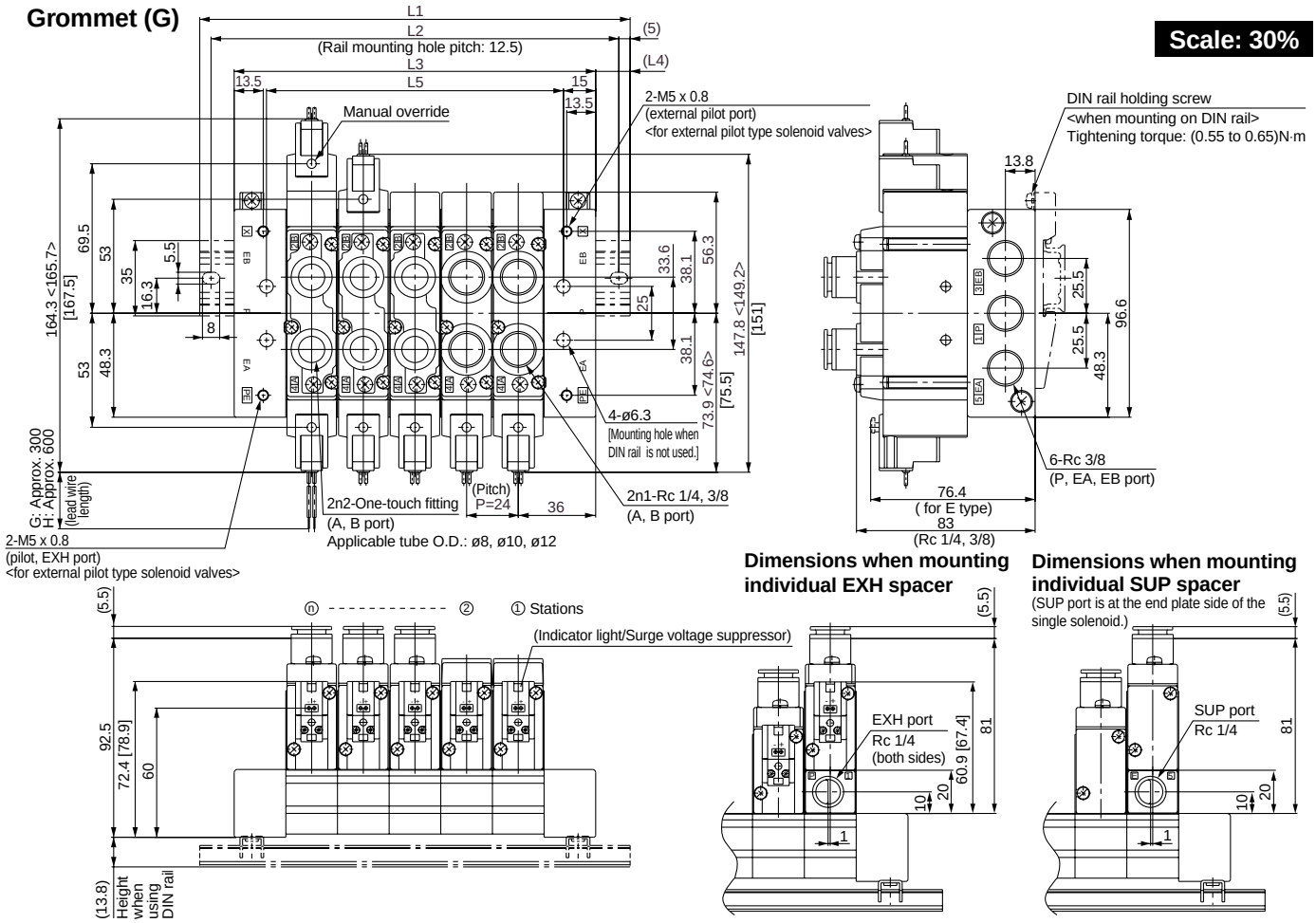

L type plug connector (L)

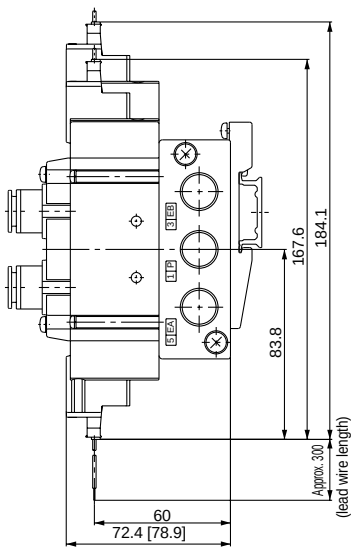

M type plug connector (M)

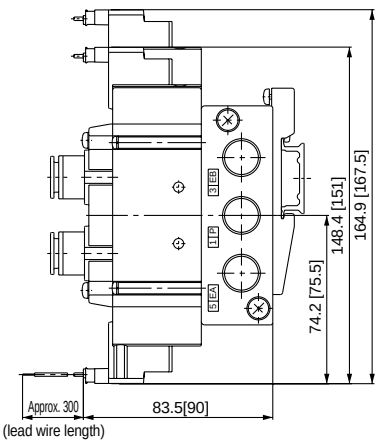

DIN terminal (D)

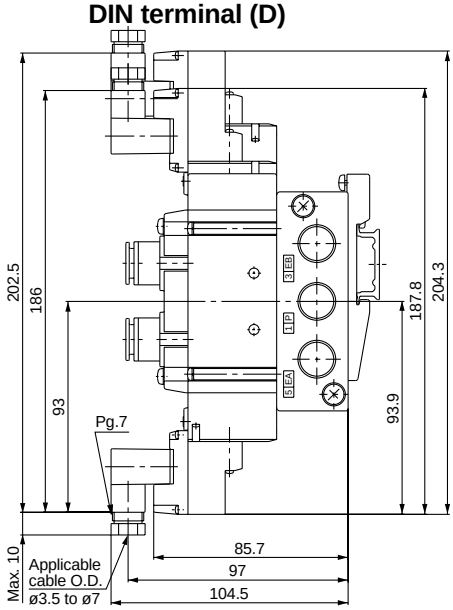

Stations n	2	3	4	5	6	7	8	9	10	11	12	13	14	15	16	17	18	19	20
L1	123	148	173	198	223	248	273	298	323	335.5	360.5	385.5	410.5	435.5	460.5	485.5	510.5	535.5	560.5
L2	112.5	137.5	162.5	187.5	212.5	237.5	262.5	287.5	312.5	325	350	375	400	425	450	475	500	525	550
L3	96	120	144	168	192	216	240	264	288	312	336	360	384	408	432	456	480	504	528
L4	13.5	14	14.5	15	15.5	16	16.5	17	17.5	12	12.5	13	13.5	14	14.5	15	15.5	16	16.5
L5	66	90	114	138	162	186	210	234	258	282	306	330	354	378	402	426	450	474	498

Note) The overall manifold width is L3 for direct mounting without DIN rail.

Type 20P

SY3000/5000/7000
Body Ported Type Manifold
Bar Stock/Flat Ribbon Cable

How to Order Manifolds

SS5Y 5 — 20P — 05

Manifold series

3	SY3000
5	SY5000
7	SY7000

Stations

03	3 stations
⋮	⋮
12	12 stations

Note) SS5Y3 has 4 to 12 stations.

How to Order Manifold Assemblies (Example)

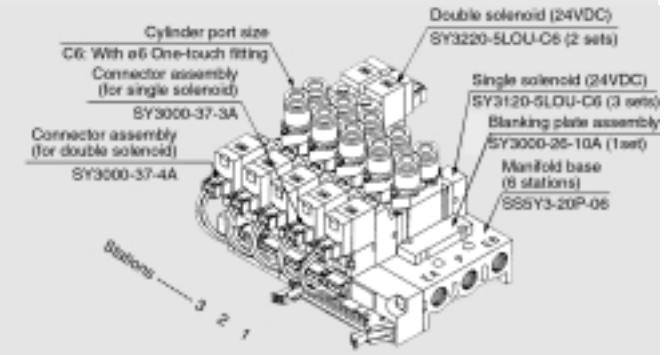

SS5Y3-20P-06 ..... 1 set (Type 20P, 6 station manifold base part no.)
∗ **SY3000-26-10A** ..... 1 set (Blanking plate assembly part no.)
∗ **SY3120-5LOU-C6** ..... 3 sets (Single solenoid part no.)
∗ **SY3220-5LOU-C6** ..... 2 sets (Double solenoid part no.)
∗ **SY3000-37-3A** ..... 3 sets (Connector assembly part no.)
∗ **SY3000-37-4A** ..... 2 sets (Connector assembly part no.)

→ To order valves and options mounted onto the manifold at the factory, list the valve/option with an asterisk (∗) in front of each part number.

Add the valve and option part numbers in order starting from the first station as shown above. When entry of part numbers becomes complicated, indicate on a manifold specification sheet. (Manifold Specification Sheet on pages 196 to 198)

How to Order Valves

Indicator light/Surge voltage suppressor

Z	With indicator light/ surge voltage suppressor
U	With indicator light/ surge voltage suppressor (non-polar type)

Note) With "Z", only positive common specification is available.

Rated voltage

5	24VDC
6	12VDC

For DC: **SY 5 1 20 — 5 LO Z □ — 01**

For AC: **SY 5 1 20 — 1 LOZ □ — 01**

Series

3	SY3000
5	SY5000
7	SY7000

Type of actuation

1	2 position single
2	2 position double
3	3 position closed center
4	3 position exhaust center
5	3 position pressure center

Rated voltage

1	100VAC
3	110VAC (115VAC)

Manual override

Nil	Non-locking push type
D	Push-turn locking slotted type
E	Push-turn locking lever type

A port size

Symbol	Port size	Applicable series
M5	M5 x 0.8	SY3000
C4	ø4 One-touch fitting	
C6	ø6 One-touch fitting	
01	Rc 1/8	SY5000
C4	ø4 One-touch fitting	
C6	ø6 One-touch fitting	
C8	ø8 One-touch fitting	
02	Rc 1/4	SY7000
C8	ø8 One-touch fitting	
C10	ø10 One-touch fitting	

Note) For the flat ribbon cable type, "U" and "Z" are available for DC specifications, and only "Z" is available for AC specifications. However, with "Z" type for DC, only a positive common specification is available. Contact SMC for other combinations.

How to Order Connector Assemblies

For 12, 24VDC

Specification	SY3000	SY5000/7000
Single solenoid	SY3000-37-3A	SY5000-37-3A
Double solenoid/ 3 position	SY3000-37-4A	SY5000-37-4A
Single solenoid with spacer assembly	SY5000-37-3A	SY5000-37-5A
Double solenoid/3 position with spacer assembly	SY3000-37-6A	SY5000-37-6A

For 100VAC

Specification	SY3000	SY5000/7000
Single solenoid	SY3000-37-32A	SY5000-37-15A
Double solenoid/ 3 position	SY3000-37-33A	SY5000-37-16A
Single solenoid with spacer assembly	SY5000-37-15A	SY5000-37-17A
Double solenoid/3 position with spacer assembly	SY3000-37-34A	SY5000-37-18A

For 110VAC (115VAC)

Specification	SY3000	SY5000/7000
Single solenoid	SY3000-37-35A	SY5000-37-19A
Double solenoid/ 3 position	SY3000-37-36A	SY5000-37-20A
Single solenoid with spacer assembly	SY5000-37-19A	SY5000-37-21A
Double solenoid/3 position with spacer assembly	SY3000-37-37A	SY5000-37-22A

Note) When single body ported solenoid valves are ordered, manifold mounting bolts and gaskets are not included. Order them separately if necessary.
(Refer to page 56 for details.)

- **External wiring is bundled for one-touch wiring**
- **Clean appearance**

With the flat ribbon cable type, each valve is wired to the printed circuit board of the manifold base to allow the external wiring to be bundled with a 26 pin MIL connector for one-touch wiring.

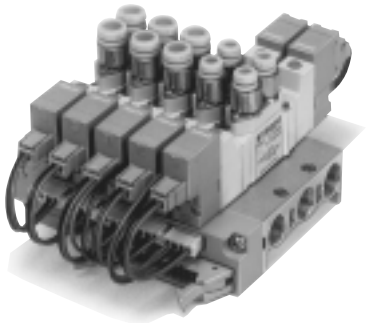

Manifold Specifications

Model		SS5Y3-20P	SS5Y5-20P	SS5Y7-20P
Applicable valve		SY3□20	SY5□20	SY7□20
Manifold type		Single base type/B mount		
P (SUP)/R (EXH) method		Common SUP/EXH		
Valve stations		4 to 12 stations Note 1)	3 to 12 stations Note 1)	
A, B port location		Valve		
Port size	P, EA, EB port	Rc 1/8	Rc 1/4	Rc 1/4
	A, B port	M5 x 0.8 C4 (ø4 One-touch fitting) C6 (ø6 One-touch fitting)	Rc 1/8 C4 (ø4 One-touch fitting) C6 (ø6 One-touch fitting) C8 (ø8 One-touch fitting)	Rc 1/4 C8 (ø8 One-touch fitting) C10 (ø10 One-touch fitting)
Valve effective area Note 2) mm² (Cv factor)		C6: P to A/B 3.6 (0.2) A/B to EA/EB 4.14 (0.23)	C8: P to A/B 9.18 (0.51) A/B to EA/EB 9.9 (0.55)	C10: P to A/B 15.84 (0.88) A/B to EA/EB 14.94 (0.83)
Manifold base weight W (g) n: Number of stations		W = 19n + 45	W = 43n + 77	W = 51n + 81
Applicable flat ribbon cable connector		Flat ribbon cable connector, Socket: 26 pin MIL, With strain relief, MIL-C-83503 conformity		
Internal wiring		Common positive and negative COM (Only positive COM for "Z" type)		
Rated voltage		12, 24VDC/100, 110VAC		

Note 1) For 10 stations or more (5 stations or more in case of SS5Y7), supply pressure to P port on both sides and exhaust from EA and EB ports on both sides.
Note 2) Value when manifold base (5 stations) is mounted, with single action 2 position type.
Note 3) The withstand voltage specification for the wiring unit is equivalent to JIS C0704, Class 1.
Note 4) Refer to page 56 for manifold options.

Manifold Internal Wiring (non-polar type)

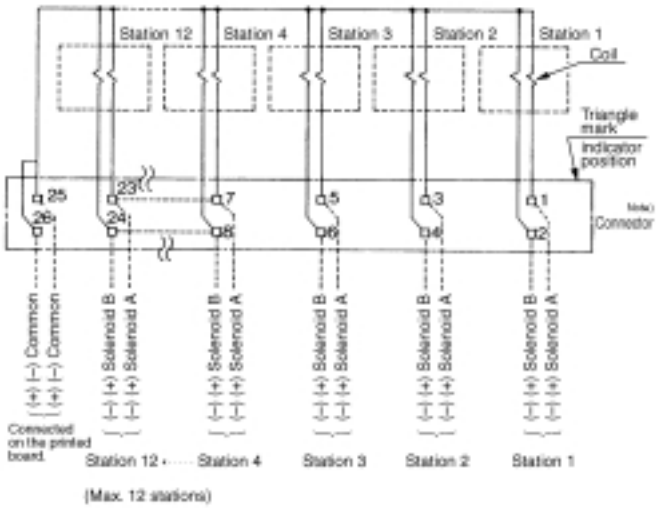

Note) Terminal numbers are not indicated on the connector. The terminal numbers indicated in the connector schematic shown above, show the correlation if the inserted connector's flat ribbon cable were numbered 1 to 26 from the triangle mark side, as shown in the figure to the right.

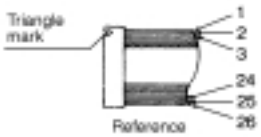

Note 1) For 10 stations or more, wire both of the common poles.
Note 2) For single solenoids, connect to the solenoid A side.
Note 3) The maximum number of stations is 12. Contact SMC if more than 12 stations are required.

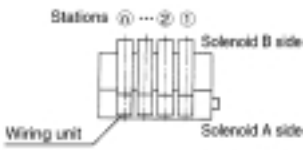

⚠Caution

Non-polar type (U) valves with DC electrical connection can be used for both negative and positive COM. However, always use positive COM with the "Z" type, since valves will not be actuated when negative COM is used.

SY3000: SS5Y3-20P-Stations

Note) [ ]: Values for AC

Scale: 35%

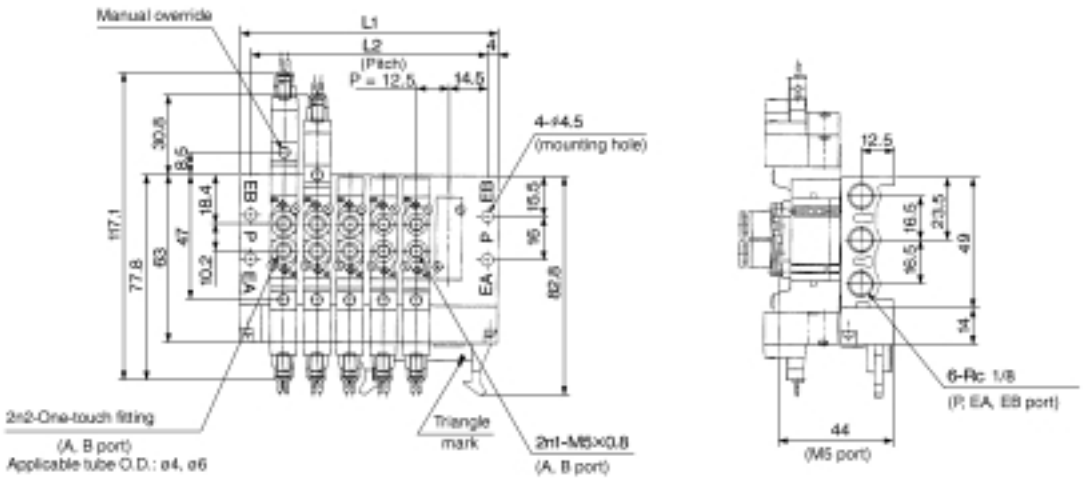

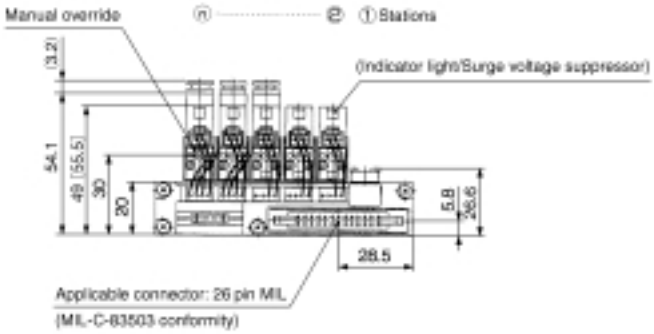

Stations n	4	5	6	7	8	9	10	11	12
L1	72.5	85	97.5	110	122.5	135	147.5	160	172.5
L2	64.5	77	89.5	102	114.5	127	139.5	152	164.5

Type 20P manifold ..... SS5Y32, #2

SY5000: SS5Y5-20P-Stations

CAD Note) [ ]: Values for AC

Scale: 35%

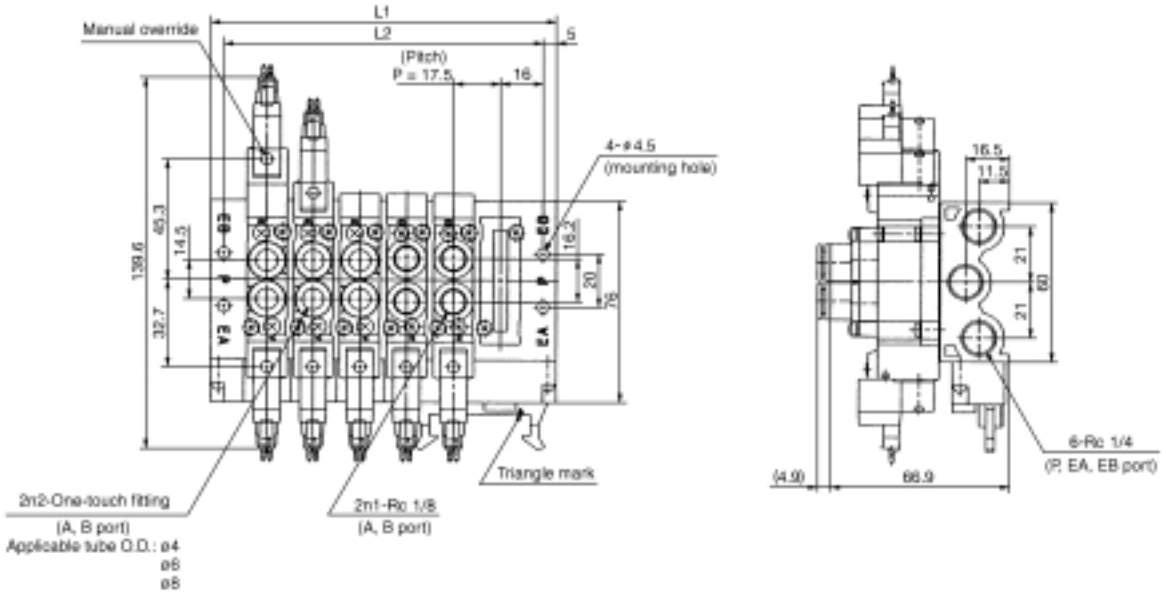

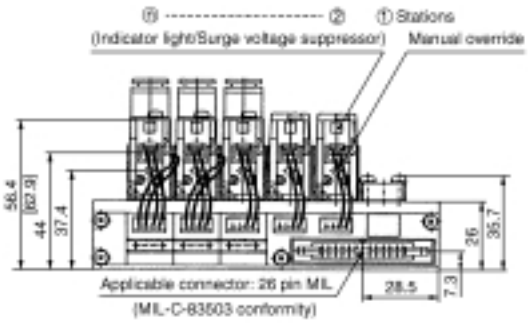

Stations n	3	4	5	6	7	8	9	10	11	12
L1	77	94.5	112	129.5	147	164.5	182	199.5	217	234.5
L2	67	84.5	102	119.5	137	154.5	172	189.5	207	224.5

CAD Type 20P manifold ..... SS5Y52, #2

SY7000: SS5Y7-20P- Stations

Note) [ ]: Values for AC

Scale: 35%

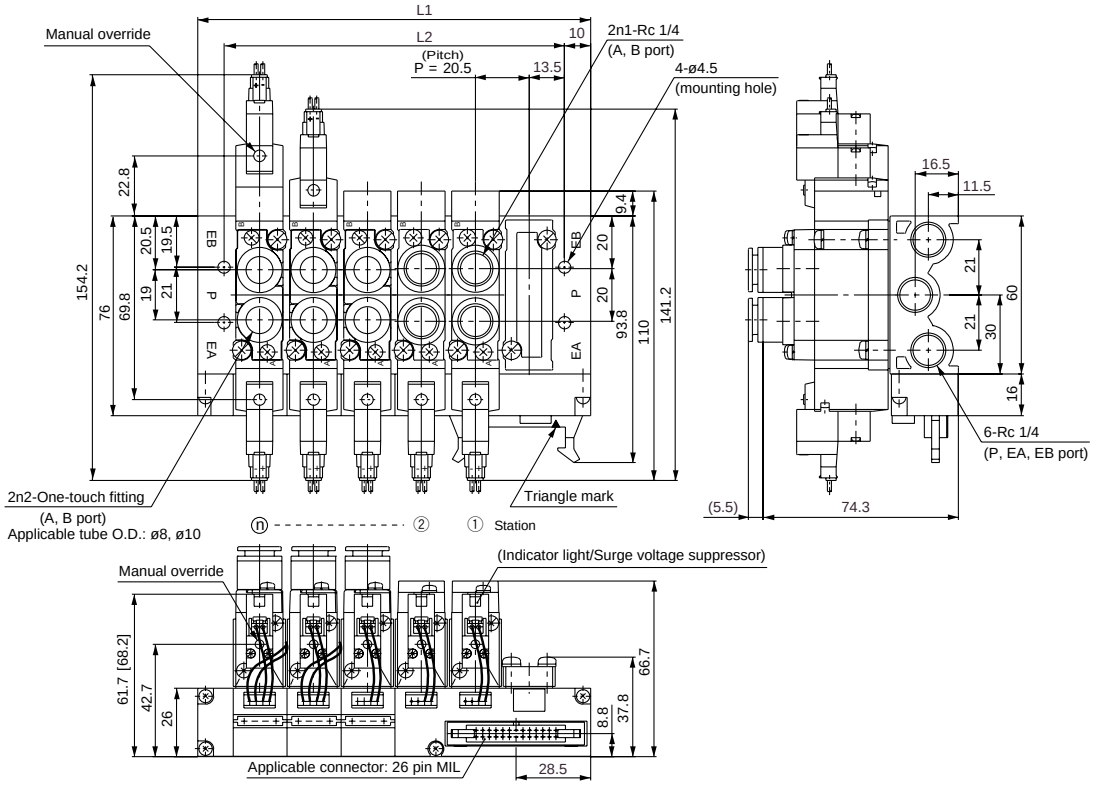

Stations n	3	4	5	6	7	8	9	10	11	12
L1	88	108.5	129	149.5	170	190.5	211	231.5	252	272.5
L2	68	88.5	109	129.5	150	170.5	191	211.5	232	252.5

Type 20P manifold ..... SS5Y72, #2

Type 23P

SY9000
Body Ported Type Manifold
Stacking Type/Flat Ribbon Cable

How to Order Manifolds

SS5Y 9 — 23P — 05 —

Manifold series

9	SY9000

Option

Symbol	Mounting
Nil	Direct mount
D	DIN rail mount (with DIN rail)
DO	DIN rail mount (without DIN rail)
D*	When a DIN rail longer than the specified stations is necessary, indicate the number of required stations at the "*" symbol.

Stations

Symbol	Stations
04	4 stations
⋮	⋮
12	12 stations

* Type 23P manifolds for SY9000 have common internal and external pilots.

* Includes the number of blanking plate assemblies.

How to Order Manifold Assemblies (Example)

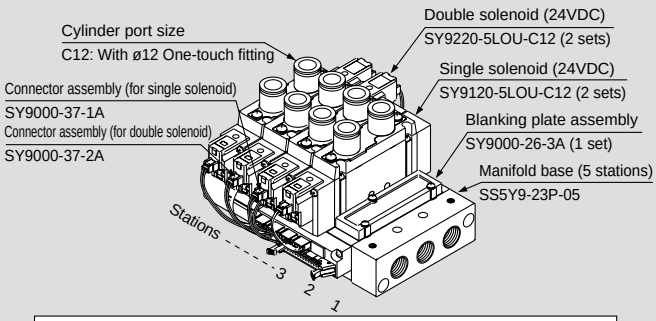

SS5Y9-23P-05 ..... 1 set (Type 23, 5 station manifold base part no.)
* **SY9000-26-3A** ..... 1 set (Blanking plate assembly part no.)
* **SY9120-5LOU-C12** .... 2 sets (Single solenoid part no.)
* **SY9220-5LOU-C12** .... 2 sets (Double solenoid part no.)
* **SY9000-37-1A** ..... 2 sets (Single solenoid part no.)
* **SY9000-37-2A** ..... 2 sets (Double solenoid part no.)

To order valves and options mounted onto the manifold at the factory, list the valve/option with an asterisk (*) in front of each part number.

Add the valve and option part numbers in order starting from the first station as shown above. When entry of part numbers becomes complicated, indicate on a manifold specification sheet. (Manifold Specification Sheet on page 199)

How to Order Valves

For DC: **SY 9 1 20 — 5 LO Z — 02**

For AC: **SY 9 1 20 — 1 LOZ — 02**

Indicator light/Surge voltage suppressor

Z	With indicator light/ surge voltage suppressor
U	With indicator light/ surge voltage suppressor (non-polar type)

Note) With "Z", only positive common specification is available.

Rated voltage

5	24VDC
6	12VDC

Series

9	SY9000

Type of actuation

1	2 position single
2	2 position double
3	3 position closed center
4	3 position exhaust center
5	3 position pressure center

Pilot specification

Nil	Internal pilot
R	External pilot

* Type 23P manifolds can be used for both internal and external pilots.

Rated voltage

1	100VAC
3	110VAC (115VAC)

Manual override

Nil	Non-locking push type
D	Push-turn locking slotted type
E	Push-turn locking lever type

A, B port size

Symbol	Port size
C8	ø8 One-touch fitting
C10	ø10 One-touch fitting
C12	ø12 One-touch fitting
02	Rc 1/4
03	Rc 3/8

Note) For the flat ribbon cable type, "U" and "Z" are available for DC specifications, and only "Z" is available for AC specifications. However, with "Z" type for DC, only a positive common specification is available. Contact SMC for other combinations.

Note) When single body ported solenoid valves are ordered, manifold mounting bolts and gaskets are not included. Order them separately if necessary. (Refer to page 56 for details.)

How to Order Connector Assemblies

For 12, 24VDC

Specification	SY9000
Single solenoid	SY9000-37-1A
Double solenoid/ 3 position	SY9000-37-2A
Single solenoid with spacer assembly	SY9000-37-3A
Double solenoid/3 position with spacer assembly	SY9000-37-4A

For 100VAC

Specification	SY9000
Single solenoid	SY9000-37-1B
Double solenoid/ 3 position	SY9000-37-2B
Single solenoid with spacer assembly	SY9000-37-3B
Double solenoid/3 position with spacer assembly	SY9000-37-4B

For 110VAC (115VAC)

Specification	SY9000
Single solenoid	SY9000-37-1C
Double solenoid/ 3 position	SY9000-37-2C
Single solenoid with spacer assembly	SY9000-37-3C
Double solenoid/3 position with spacer assembly	SY9000-37-4C

- **External wiring is bundled for one-touch wiring**
- **Clean appearance**

With the flat ribbon cable type, each valve is wired to the printed circuit board of the manifold base to allow the external wiring to be bundled with a 26 pin MIL connector for one-touch wiring.

Manifold specifications

Model		SS5Y9-23P
Applicable valve		SY9□20
Manifold type		Stacking type
P (SUP)/R (EXH) method		Common SUP/EXH
Valve stations		4 to 12 stations Note 1)
A, B port location		Valve
Port size	P, EA, EB port	Rc 3/8
	A, B port	Rc 1/4 Rc 3/8 C8 (ø8 One-touch fitting) C10 (ø10 One-touch fitting) C12 (ø12 One-touch fitting)
Valve effective area Note 2) mm² (Cv factor)		C: P to A/B 35.41 (1.97) A/B to EA/EB 30.55 (1.70)
Manifold base weight W (g) n: Number of stations		W = 73n + 259
Applicable flat ribbon cable connector		Flat ribbon cable connector, Socket: 26 pin MIL, With strain relief, MIL-C-83503 conformity
Internal wiring		Common positive and negative COM (Only positive COM for "Z" type)
Rated voltage		12, 24VDC/100, 110VAC

Note 1) For 10 stations or more, supply pressure to P port on both sides and exhaust from EA and EB ports on both sides.
Note 2) Value when manifold base (5 stations) is mounted, with single action 2 position type.
Note 3) The withstand voltage specification for the wiring unit is equivalent to JIS C0704, class 1.
Note 4) Refer to page 56 for manifold options.

Manifold internal wiring (non-polar type)

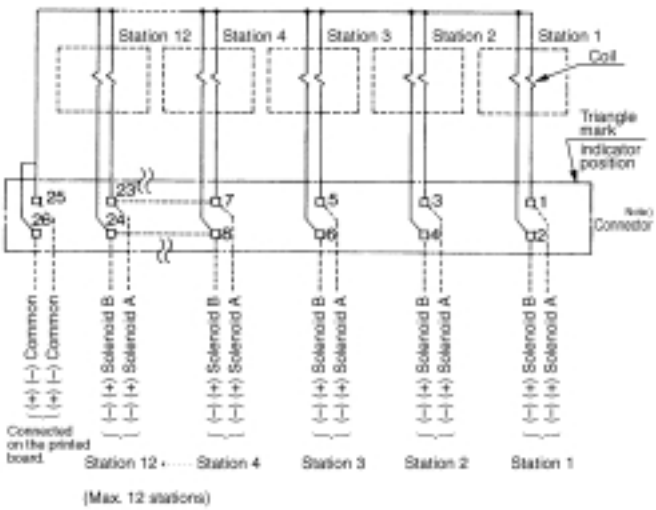

Note) Terminal numbers are not indicated on the connectors. The terminal numbers indicated in the connector schematic shown above, show the correlation if the inserted connector's flat ribbon cable were numbered 1 to 26 from the triangle mark side, as shown in the figure to the right.

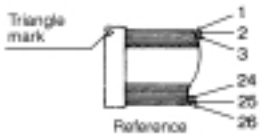

Note 1) For 10 stations or more, wire both of the common poles.
Note 2) For single solenoids, connect to the solenoid A side.
Note 3) The maximum number of stations is 12. Contact SMC if more than 12 stations are required.

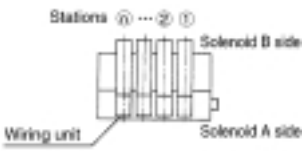

⚠Caution

Non-polar type (U) valves with DC electrical connection can be used for both negative and positive COM. However, always use positive COM with the "Z" type, since valves will not be actuated when negative COM is used.

SY9000: SS5Y9-23P-Stations-(D)

Note) [ ]: Values for AC

Scale: 30%

Grommet (G)

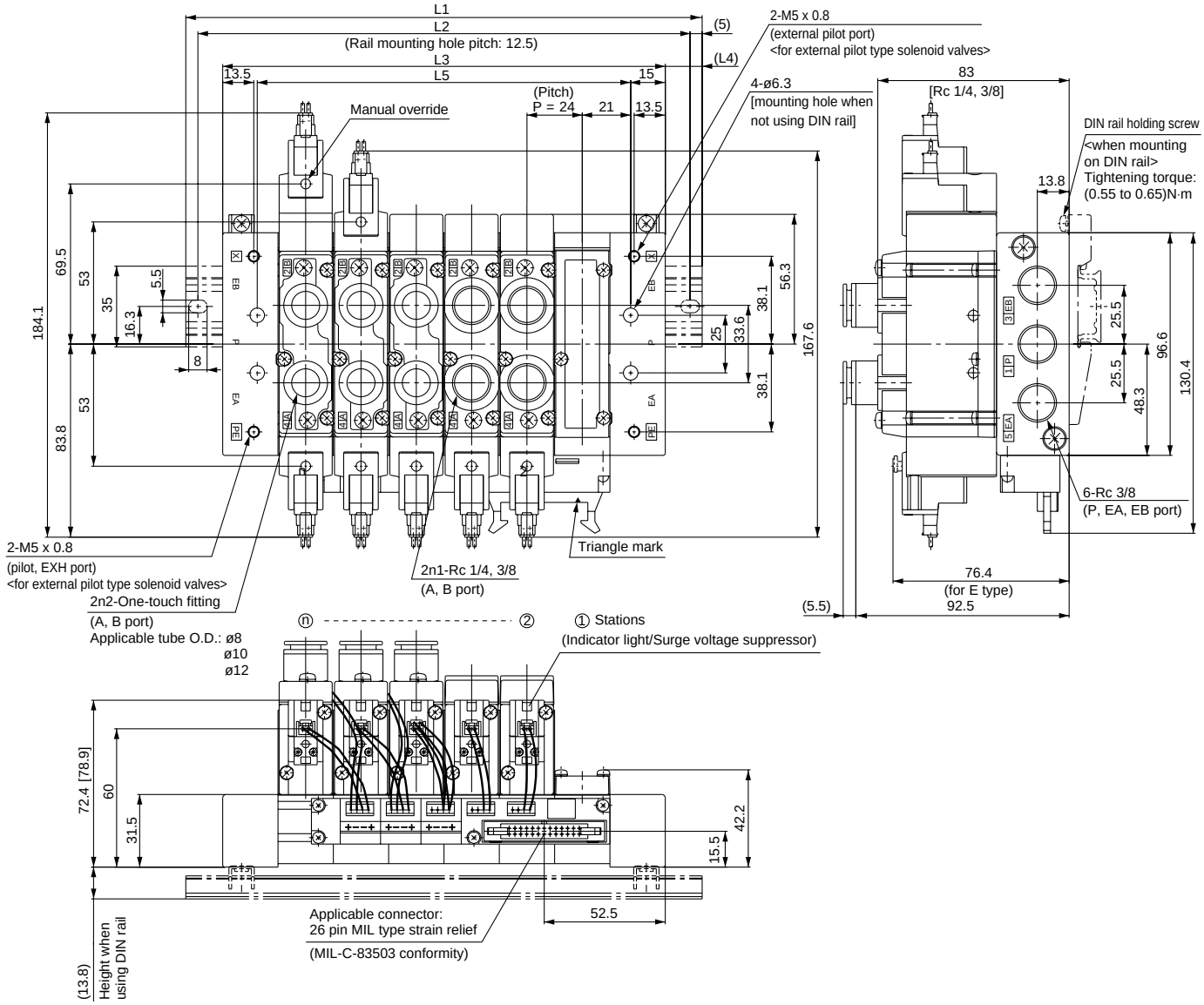

Stations n	4	5	6	7	8	9	10	11	12
L1	173	198	223	248	273	298	323	335.5	360.5
L2	162.5	187.5	212.5	237.5	262.5	287.5	312.5	325	350
L3	144	168	192	216	240	264	288	312	336
L4	14.5	15	15.5	16	16.5	17	17.5	12	12.5
L5	114	138	162	186	210	234	258	282	306

Note) The overall manifold width is L3 for direct mounting without DIN rail.

Manifold Options

■ For types 20, 23 Blanking plate assembly

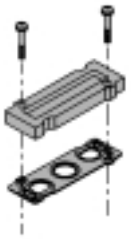

Series	Assembly part no.
SY3000	SY3000-26-9A
SY5000	SY5000-26-18A
SY7000	SY7000-26-20A
SY9000	SY9000-26-1A

■ For types 20P, 23P Blanking plate assembly

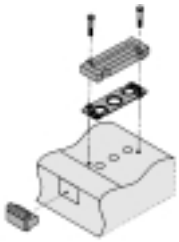

Series	Assembly part no.
SY3000	SY3000-26-10A
SY5000	SY5000-26-19A
SY7000	SY7000-26-21A
SY9000	SY9000-26-3A

■ Bolt, Gasket part numbers

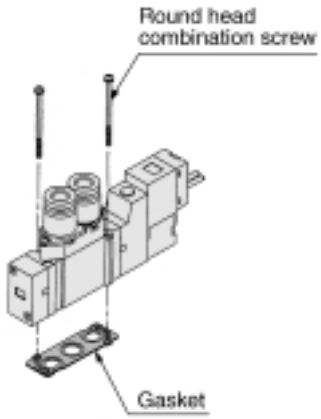

Series	Round head combination screw	Gasket
SY3000	SY3000-23-4 (M2 x 21)	SY3000-11-24
SY5000	M3 x 26 (Flat nickel plated)	SY5000-11-10
SY7000	M4 x 31 (Flat nickel plated)	SY7000-11-9
SY9000	SY9000-18-2 (M3 x 42)	SY9000-11-1

■ Individual EXH spacer assembly

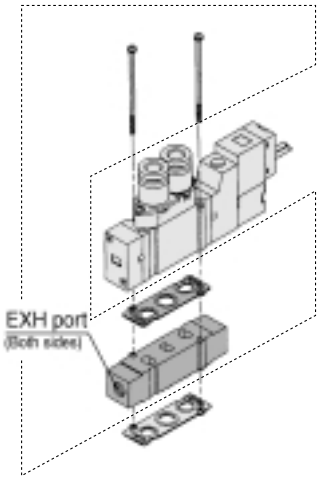

Series	Assembly part no.	Port size
SY3000	SY3000-39-20A	M5 x 0.8
SY5000	SY5000-39-1A	Rc 1/8
SY7000	SY7000-39-1A	Rc 1/4
SY9000	SY9000-39-1A	Rc 1/4

Note) In case of types 20P and 23P, to protect from drainage, arrange the piping on the EA port (wiring unit side) so that the wiring unit will not be exposed to the direct exhaust from the valve.

■ Individual SUP spacer assembly

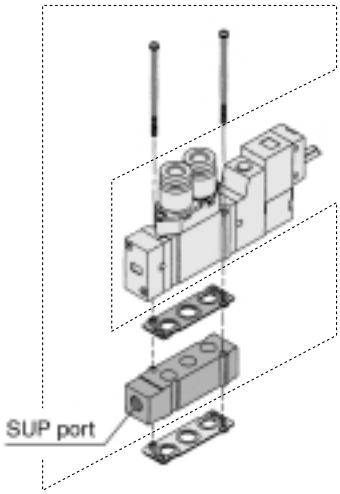

Series	Assembly part no.	Port size
SY3000	SY3000-38-20A	M5 x 0.8
SY5000	SY5000-38-1A	Rc 1/8
SY7000	SY7000-38-1A	Rc 1/4
SY9000	SY9000-38-1A	Rc 1/4

Note 1) The SUP port can be on the lead wire side or end plate side for SY3000/5000/7000. (The SUP port direction is as shown above when shipped already assembled.)

Note 2) For SY9000, the SUP port is only available on the end plate side.

■ Plug (white)

Insert into unused cylinder ports and SUP/EXH ports.
The minimum order quantity is 10 pieces. Order in multiples of 10.

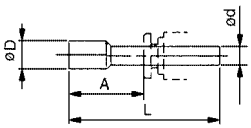

Dimensions

Applicable fitting size ød	Model	A	L	D
4	**KQ2P-04**	16	32	6
6	**KQ2P-06**	18	35	8
8	**KQ2P-08**	20.5	39	10
10	**KQ2P-10**	22	43	12
12	**KQ2P-12**	24	45.5	14

⚠ Caution

Mounting screw tightening torque

M2: 0.15N·m
M3: 0.6N·m
M4: 1.4N·m

Manifold Options

■ SUP block disc (SY9000)

By installing a SUP block disc in the pressure supply passage of the manifold valve, two or more different pressures, high or low, can be supplied to one manifold.

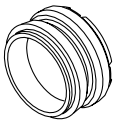

Series	Part no.
SY9000	SY9000-61-2A

■ EXH block disc (SY9000)

By installing an EXH block disc in the exhaust passage of the manifold valve, the passage can be divided so that the exhaust from one valve will not affect another valve. (Two block discs are required to block both EXH ports.)

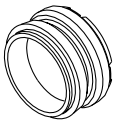

Series	Part no.
SY9000	SY9000-61-2A

■ Labels for block disc (SY9000)

Labels are applied to valves with SUP and EXH block discs for external confirmation of blocked passages. (3 labels per package)

VZ3000-123-1A

SUP block disc label

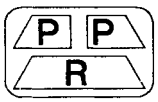

EXH block disc label

SUP/EXH block disc label

∗ When block discs are ordered with manifolds using a manifold specification sheet, block disc labels are already applied if the block discs are installed at the time of shipment.

■ SY9000 DIN rail dimensions and weights

VZ1000 – 11 – 4 – □

Refer to the table below for dimension L.

∗ Specify a number inside □ from the DIN rail dimensions table below.

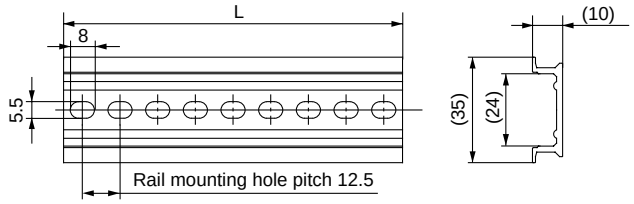

No.	0	1	2	3	4	5	6	7	8	9
Dimension L	98	110.5	123	135.5	148	160.5	173	185.5	198	210.5
Weight (g)	24.8	28	31.1	34.3	37.4	40.6	43.8	46.9	50.1	53.3

No.	10	11	12	13	14	15	16	17	18	19
Dimension L	223	235.5	248	260.5	273	285.5	298	310.5	323	335.5
Weight (g)	56.4	59.6	62.7	65.9	69.1	72.2	75.4	78.6	81.7	84.9

No.	20	21	22	23	24	25	26	27	28	29
Dimension L	348	360.5	373	385.5	398	410.5	423	435.5	448	460.5
Weight (g)	88	91.2	94.4	97.5	100.7	103.9	107	110.2	113.3	116.5

Note) Refer to page 236 regarding DIN rails.
Refer to dimension L1 on page 55 for lengths that correspond to the number of manifold stations.

■ Cable assembly (20P, 23P)

AXT100-FC26-1 / 2 / 3

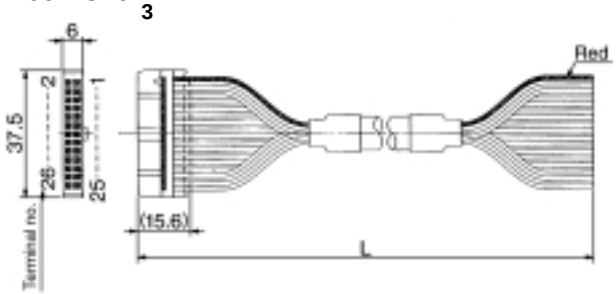

Flat ribbon cable connector assembly

Cable length (L)	Assembly part no.	Note
1.5m	AXT100-FC26-1	26 core cable x 28AWG
3m	AXT100-FC26-2	
5m	AXT100-FC26-3	

∗ For other commercial connectors, use a 26 pin type with strain relief conforming with MIL-C-83503.

Connector manufacturer examples

- **Hirose Electric Company**
- **Sumitomo/3-M Limited**
- **Fujitsu, Ltd.**
- **Japan Aviation Electronics Industry, Ltd.**
- **J.S.T. Mfg. Co., Ltd.**

Manifold Base Expansion (for SY9000 Only) Stations can be added in a desired location.

For type 23 manifold base expansion, tension bolts are required as well as a manifold block assembly. Tension bolts vary in length depending on the number of stations; therefore, order the appropriate tension bolts for the expanded (or reduced) manifold base. (Changes in the number of stations for type 23P manifolds require wiring units and lead wire assemblies for any additional stations.)

1. Loosen the two tension bolts ⑤ that connect the manifold base and remove them.
   (In case of a DIN rail type, also loosen the DIN rail holding screw on either the U side or D side.)
2. Separate the blocks at the location where a new station is to be added.
3. Mount the manifold block assembly to be added.
4. Hold the blocks so that there is no space between them, insert the appropriate tensions bolts into the expanded manifold base and tighten them.

⚠**Caution** (Tightening torque: 2.9N·m)
(With the DIN rail type, be sure to tighten the tension bolts first, and then tighten the DIN rail holding screws. Tightening torque: 1.4N·m)

⚠Caution

1. Be sure to turn off the power supply and air supply before disassembling. Furthermore, confirm that the air is completely exhausted before beginning disassembly, since residual air may be present inside the actuator, piping, and manifold.
2. When disassembly and assembly are performed, insufficient tightening of the tension bolts will cause air leakage.
3. Type 23 manifold can be changed into a type 23P manifold by adding a wiring unit assembly.

Exploded View of Body Ported Type Manifold 23 / 23P Common

In case of body ported type manifolds, disassembly and expansion of manifolds are possible with series SY9000 only.

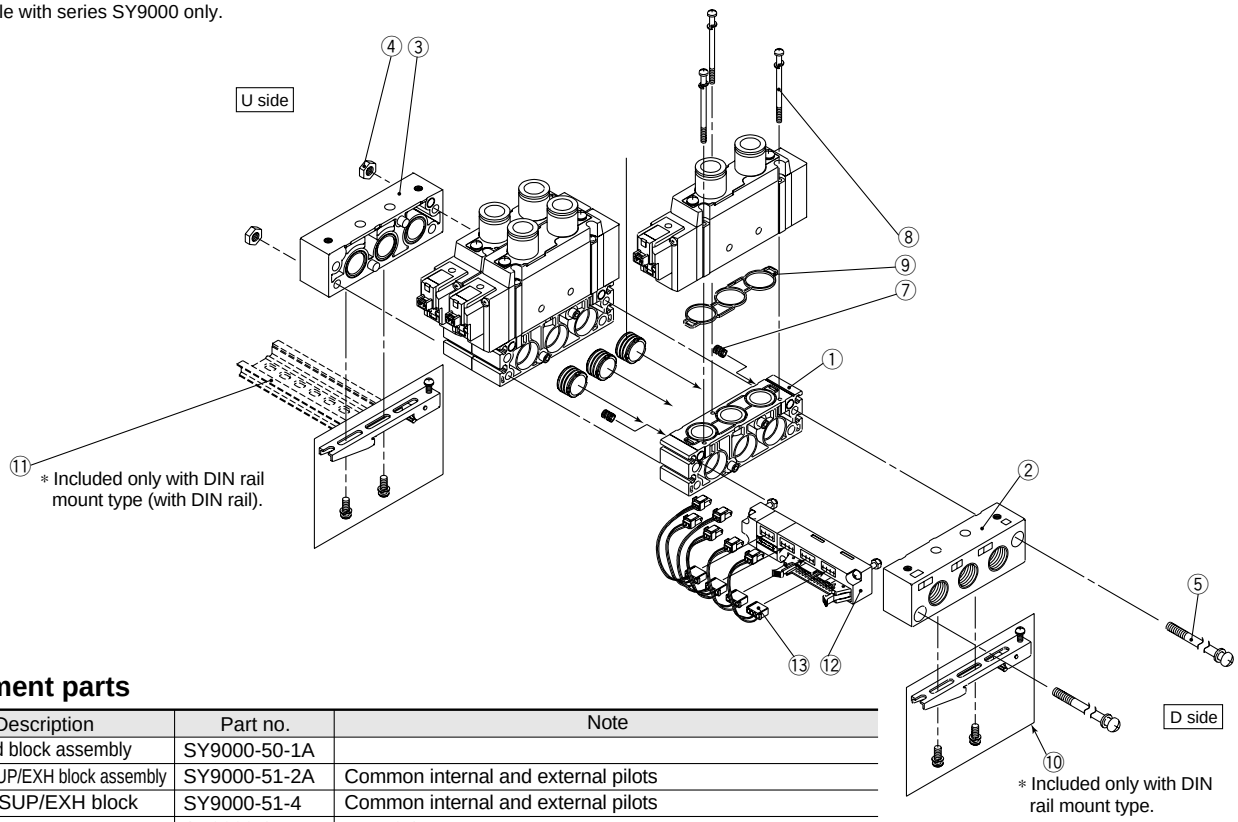

Replacement parts

No.	Description	Part no.	Note
1	Manifold block assembly	SY9000-50-1A	
2	D side SUP/EXH block assembly	SY9000-51-2A	Common internal and external pilots
3	U side SUP/EXH block	SY9000-51-4	Common internal and external pilots
4	Hexagon nut	SY9000-25-1	M5 x 0.8
5	Tension bolt	SY9000-23-□	Specify the number of stations inside □ at the end of the part number.
6	Bushing assembly	SY9000-61-1A	Included with the manifold block assembly and D side SUP/EXH block assembly.
7	Bushing assembly	SY9000-61-3A	Included with the manifold block assembly and D side SUP/EXH block assembly.
8	Round head combination screw	SY9000-18-2	Included with the manifold block assembly.
9	Manifold gasket	SY9000-11-1	Included with the manifold block assembly.
10	Clamp bracket sub-assembly	SY9000-29-1A	
11	DIN rail	VZ1000-11-4-□	Refer to page 57.
12	Wiring unit assembly	SY9000-36-□A	Specify the number of stations (4 to 12) inside □ in the part number.
13	Connector assembly	SY9000-37-□□	Refer to page 53.

Type 41
Type 42

SY3000/5000/7000
Base Mounted Type Manifold
Bar Stock/Individual Wiring

CAD

How to Order Manifolds

Type 41/Compact type

SS5Y 5 — 41 — 05 — C8

Manifold series

3	SY3000
5	SY5000

Stations

02	2 stations
⋮	⋮
20	20 stations

∗ Includes the number of blanking plate assemblies.

A/B port size

Symbol	Port size	Applicable series
M5	M5 x 0.8	SY3000
C4	ø4 One-touch fitting	
C6	ø6 One-touch fitting	
01	Rc 1/8	SY5000
C6	ø6 One-touch fitting	
C8	ø8 One-touch fitting	

Type 42/Common external pilot type

SS5Y 5 — 42 — 05 — C8

Manifold series

3	SY3000
5	SY5000
7	SY7000

Stations

02	2 stations
⋮	⋮
20	20 stations

A/B port size

Symbol	Port size	Applicable series
01	Rc 1/8	SY3000
C4	ø4 One-touch fitting	
C6	ø6 One-touch fitting	
02	Rc 1/4	SY5000
C6	ø6 One-touch fitting	
C8	ø8 One-touch fitting	
02	Rc 1/4	SY7000
C10	ø10 One-touch fitting	

How to Order Manifold Assemblies (Example)

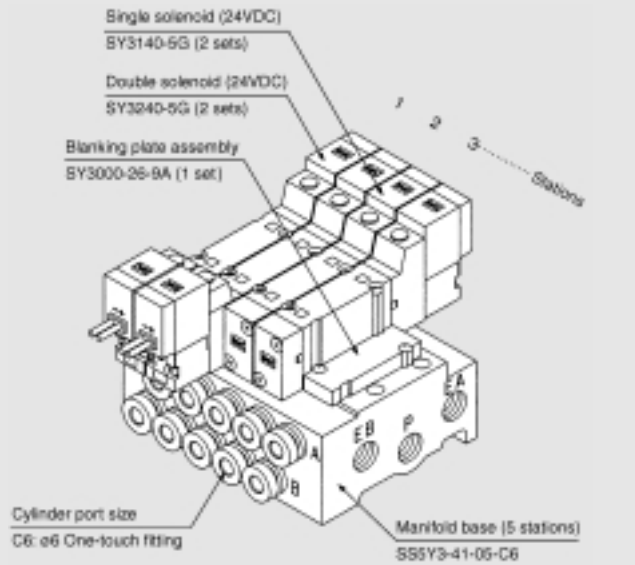

SS5Y3-41-05-C6 ..... 1 set (Type 41, 5 station manifold base part no.)
∗ **SY3240-5G** .....2 sets (Double solenoid part no.)
∗ **SY3140-5G** .....2 sets (Single solenoid part no.)
∗ **SY3000-26-9A** .....1 set (Blanking plate assembly part no.)

To order valves and options mounted onto the manifold at the factory, list the valve/option with an asterisk (∗) in front of each part number.

Add the valve and option part numbers in order starting from the first station as shown above. When entry of part numbers becomes complicated, indicate on a manifold specification sheet. (Manifold Specification Sheet on pages 191 to 193)

SMC

How to Order Valves

SY 5 2 40 □ – 5 L □ □

Series

3	SY3000
5	SY5000
7	SY7000

Type of actuation

1	2 position single
2	2 position double
3	3 position closed center
4	3 position exhaust center
5	3 position pressure center

Pilot type

Nil	Internal pilot
R	External pilot

Rated voltage

DC specifications

5	24VDC
6	12VDC
V	6VDC
S	5VDC
R	3VDC

AC specifications (50/60Hz)

1	100VAC
2	200VAC
3	110VAC [115VAC]
4	220VAC [230VAC]

Note 1) DC specifications for "D" and "DO" are only available in 24VDC and 12VDC.
Note 2) "D" and "DO" are not available for SY3000.

Manual override

Nil	Non-locking push type
D	Push-turn locking slotted type
E	Push-turn locking lever type

Indicator light/Surge voltage suppressor

Electrical entry G, H, L, M

Nil	Without indicator light/surge voltage suppressor
S	With surge voltage suppressor
Z	With indicator light/surge voltage suppressor
R	With surge voltage suppressor (non-polar type)
U	With indicator light/surge voltage suppressor (non-polar type)

Note 1) For AC, there is no "S" specification, since it is integrated with the rectifier.
Note 2) "R" and "U" are available for DC only.

Electrical entry D

Nil	Without indicator light/surge voltage suppressor
S	With surge voltage suppressor (non-polar type)
Z	With indicator light/surge voltage suppressor (non-polar type)

Note 1) "DOZ" is not available.
Note 2) For AC, there is no "S" specification, since it is integrated with the rectifier.

Electrical entry

24V, 12V, 6V, 5V, 3VDC/100V, 110V, 200V, 220VAC			24V, 12VDC 100V, 110V, 200V, 220VAC
Grommet	**L type plug connector**	**M type plug connector**	**DIN terminal**
G: Lead wire length 300mm **H:** Lead wire length 600mm	**L:** With lead wire (length 300mm) **LN:** Without lead wire **LO:** Without connector	**M:** With lead wire (length 300mm) **MN:** Without lead wire **MO:** Without connector	**(Except SY3000)** **D:** With connector **DO:** Without connector

Note 1) "LN" and "MN" include 2 sockets.
Note 2) "D" and "DO" are not available for SY3000.
Note 3) DIN43650C standard DIN terminal "Y" is also available. Refer to page 189 for details.

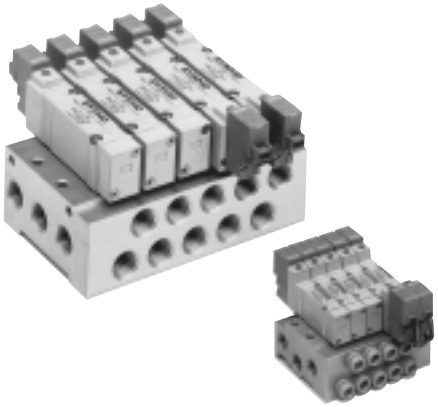

Manifold specifications

Model		SS5Y3-41	SS5Y3-42	SS5Y5-41	SS5Y5-42	SS5Y7-42
Applicable valve		SY3□40		SY5□40		SY7□40
Manifold type		Single base type/B mount				
P (SUP)/R (EXH) method		Common SUP/EXH				
Valve stations		2 to 20 stations Note 1)				
A, B port specifications	Location	Base				
	Direction	Side				
Port size	P, EA, EB port	Rc 1/8		Rc 1/4		Rc 1/4
	A, B port	M5 x 0.8 C4 (ø4 One-touch fitting) C6 (ø6 One-touch fitting)	Rc 1/8 C4 (ø4 One-touch fitting) C6 (ø6 One-touch fitting)	Rc 1/8 C6 (ø6 One-touch fitting) C8 (ø8 One-touch fitting)	Rc 1/4 C6 (ø6 One-touch fitting) C8 (ø8 One-touch fitting)	Rc 1/4 C10 (ø10 One-touch fitting)
Valve effective area Note 2) mm² (Cv factor)		C6: P to A/B 3.96 (0.22) A/B to EA/EB 4.14 (0.23)		C8: P to A/B 9.54 (0.53) A/B to EA/EB 9.0 (0.5)		C10: P to A/B 16.2 (0.9) A/B to EA/EB 16.2 (0.9)
Manifold base weight W (g) n: Number of stations		W = 30n + 50	W = 37n + 63	W = 61n + 101	W = 79n + 127	W = 100n + 151

Note 1) For 10 stations or more (5 stations or more in case of SS5Y7), supply pressure to P port on both sides and exhaust from EA and EB ports on both sides.

Note 2) Value when manifold base (5 stations) is mounted, with single action 2 position type.

Note 3) Refer to page 89 for manifold options.

SY3000: SS5Y3-41-Stations-M5, C4, C6

CAD

Note) [ ]: Values for AC
< >: Values with surge voltage suppressor

Grommet (G)

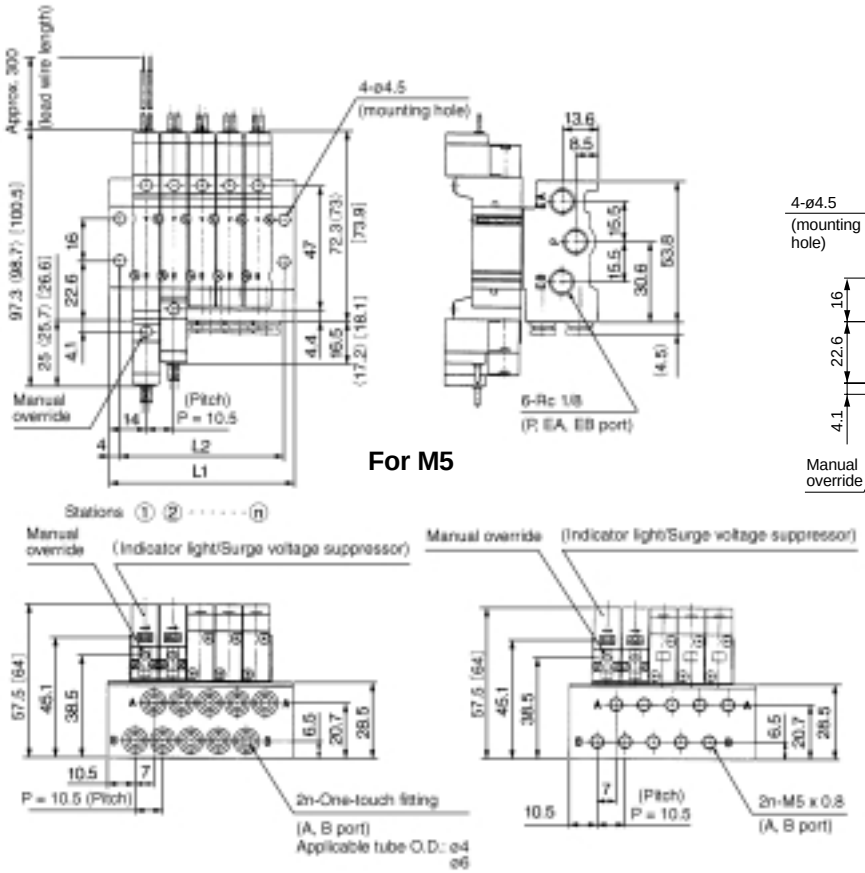

With interface regulator (with gauge)

Scale: 35%

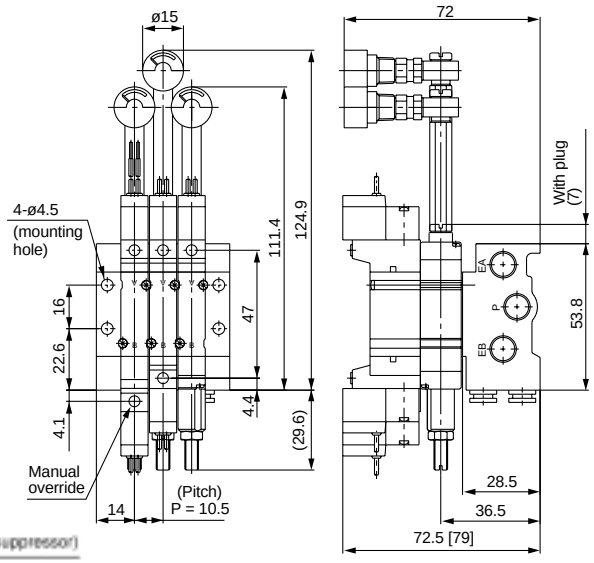

L type plug connector (L)

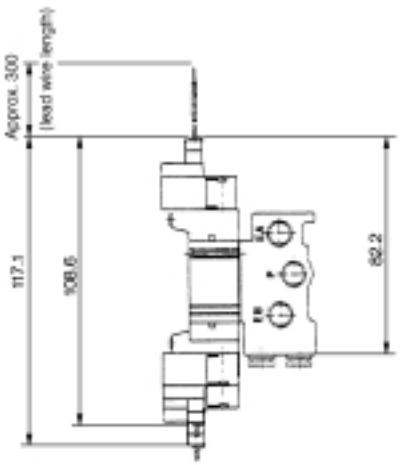

M type plug connector (M)

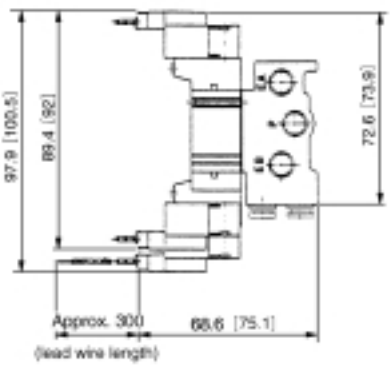

Stations n	2	3	4	5	6	7	8	9	10	11	12	13	14	15	16	17	18	19	20
L1	38.5	49	59.5	70	80.5	91	101.5	112	122.5	133	143.5	154	164.5	175	185.5	196	206.5	217	227.5
L2	30.5	41	51.5	62	72.5	83	93.5	104	114.5	125	135.5	146	156.5	167	177.5	188	198.5	209	219.5

CAD Type 41 manifold ... SS5Y32, #3

SY5000: SS5Y5-41-Stations-01, C6, C8

CAD

Note) [ ]: Values for AC
< >: Values with surge voltage suppressor

Grommet (G)

Scale: 35%

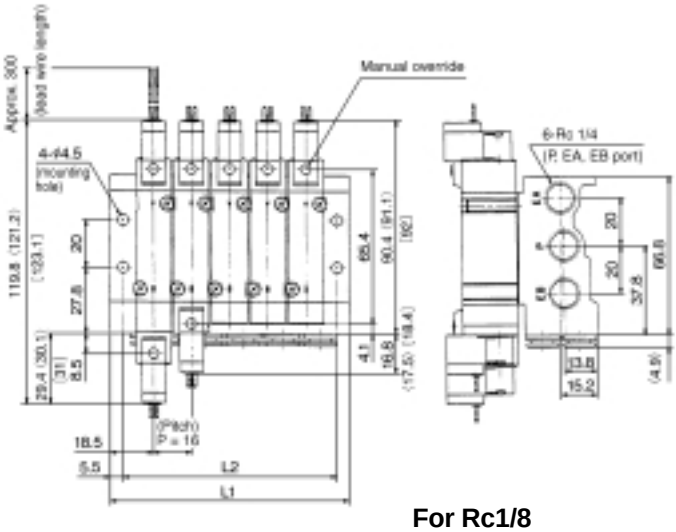

With interface regulator (with gauge)

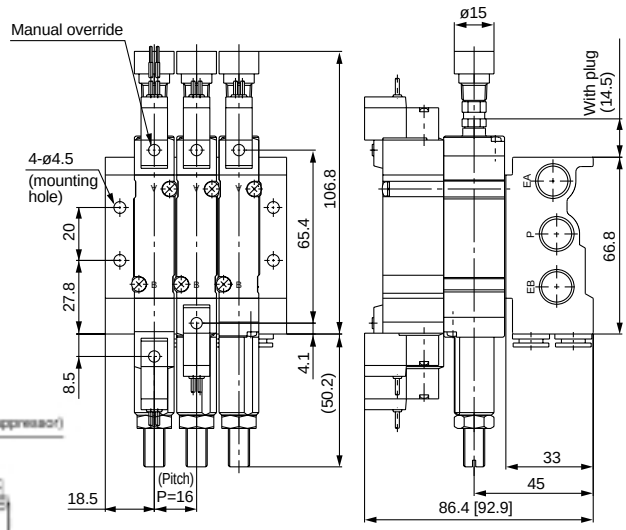

For Rc1/8

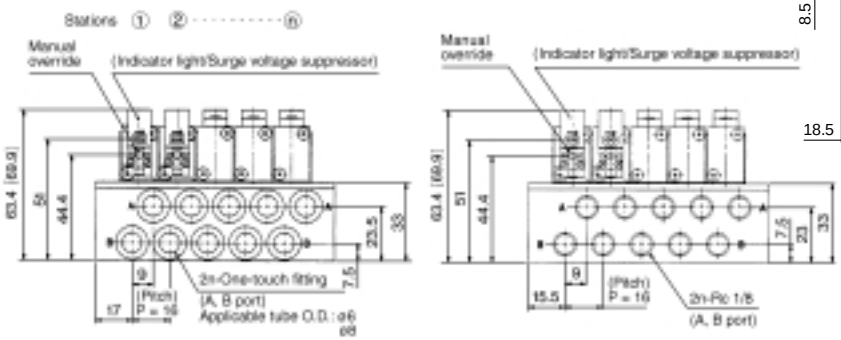

L type plug connector (L)

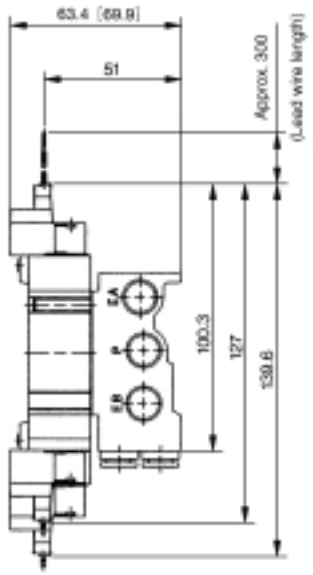

M type plug connector (M)

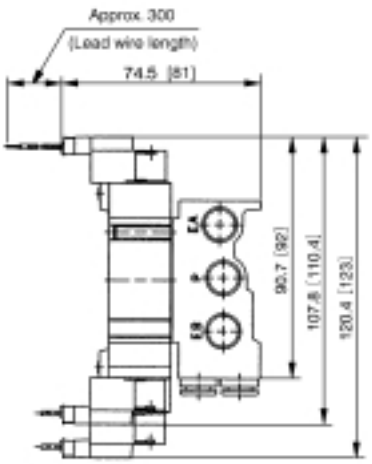

DIN terminal (D)

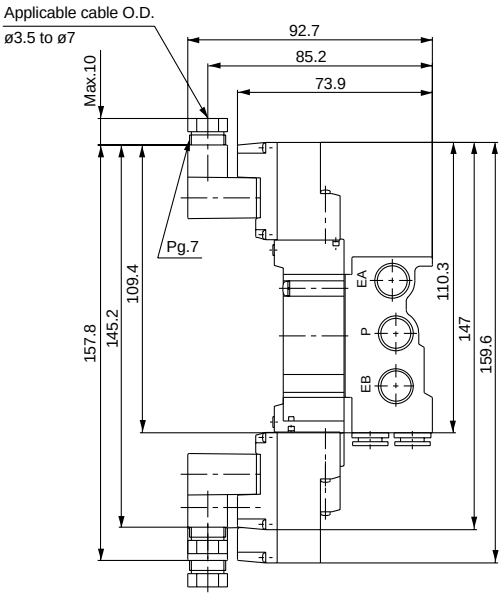

Stations n	2	3	4	5	6	7	8	9	10	11	12	13	14	15	16	17	18	19	20
L1	52.5	68.5	84.5	100.5	116.5	132.5	148.5	164.5	180.5	196.5	212.5	228.5	244.5	260.5	276.5	292.5	308.5	324.5	340.5
L2	42	58	74	90	106	122	138	154	170	186	202	218	234	250	266	282	298	314	330

CAD Type 41 manifold ... SS5Y52, #3

SY3000: SS5Y3-42-Stations-C4, C6

CAD

Note) [ ]: Values for AC
< >: Values with surge voltage suppressor

Grommet (G)

Scale: 35%

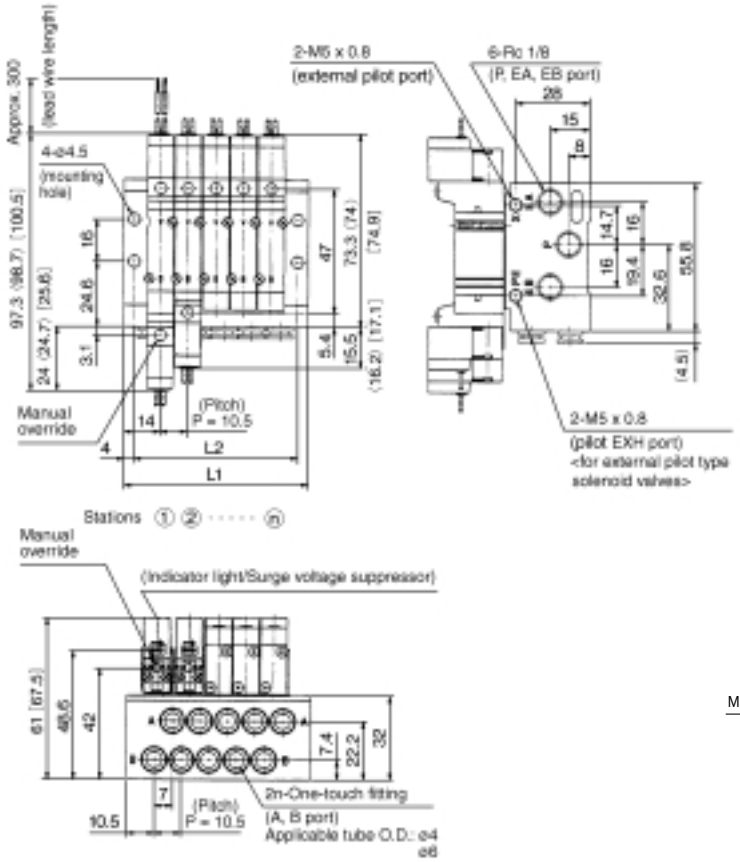

With interface regulator (with gauge)

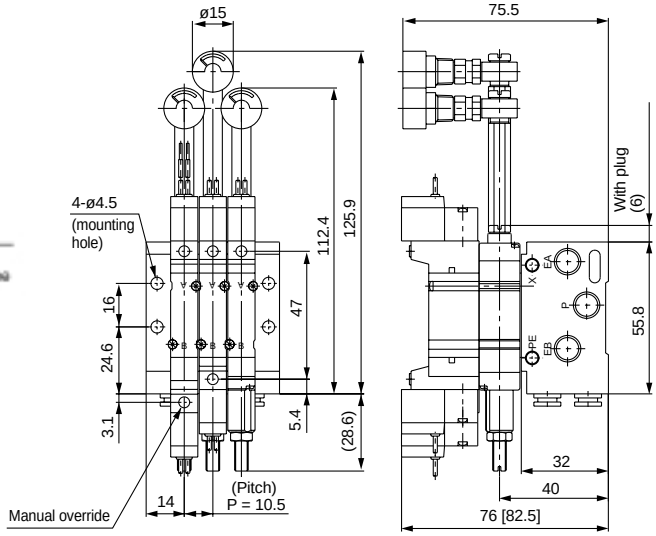

L type plug connector (L)

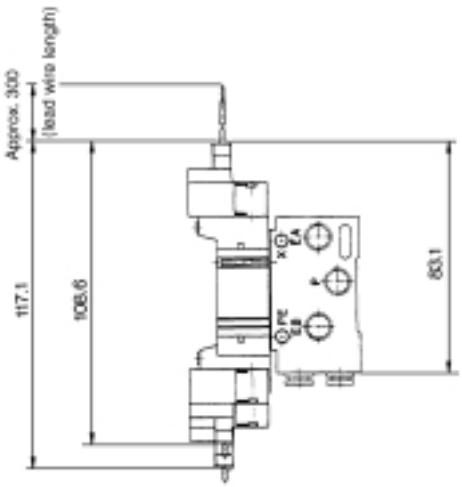

M type plug connector (M)

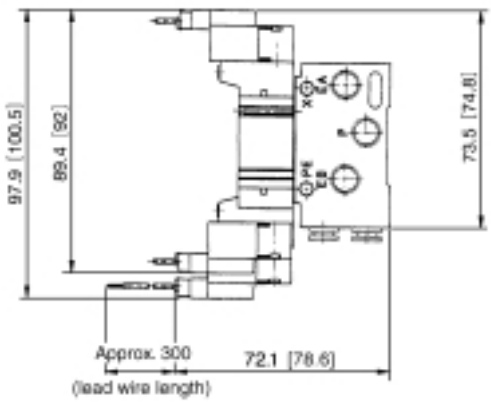

Stations n	2	3	4	5	6	7	8	9	10	11	12	13	14	15	16	17	18	19	20
L1	38.5	49	59.5	70	80.5	91	101.5	112	122.5	133	143.5	154	164.5	175	185.5	196	206.5	217	227.5
L2	30.5	41	51.5	62	72.5	83	93.5	104	114.5	125	135.5	146	156.5	167	177.5	188	198.5	209	219.5

CAD Type 42 manifold ... SS5Y32, #5

SY3000: SS5Y3-42- Stations -01

CAD

Note) [ ]: Values for AC
< >: Values with surge voltage suppressor

Grommet (G)

Scale: 35%

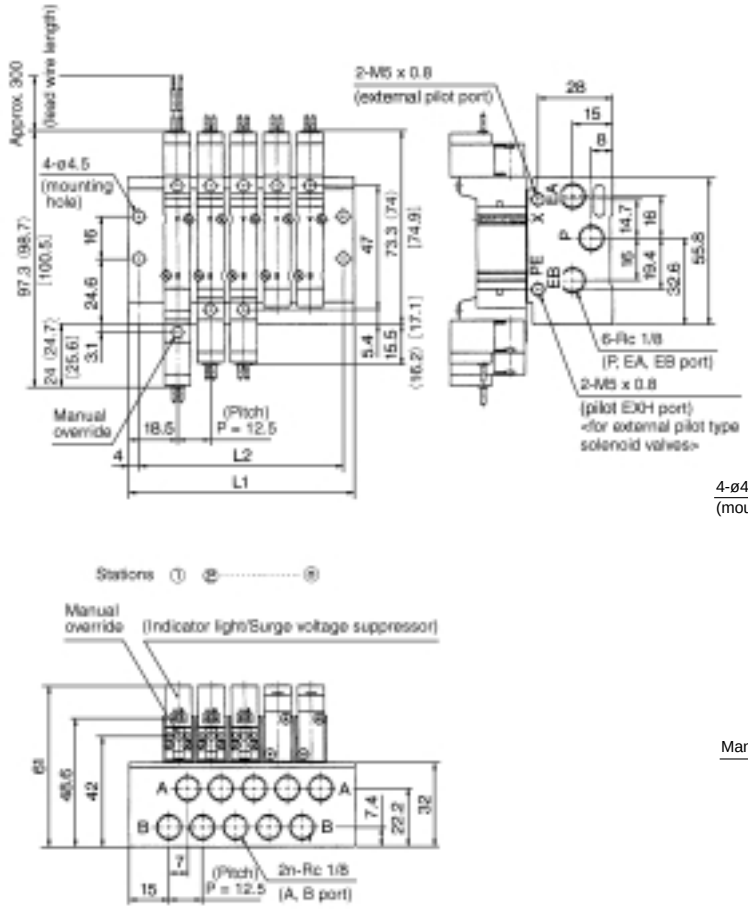

With interface regulator (with gauge)

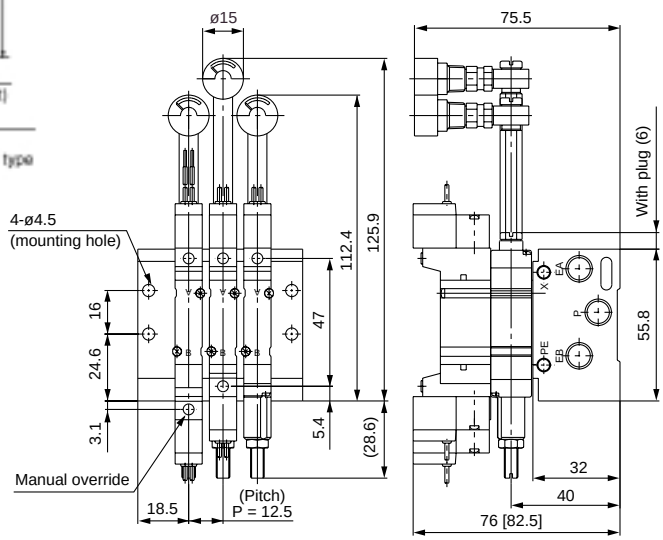

L type plug connector (L)

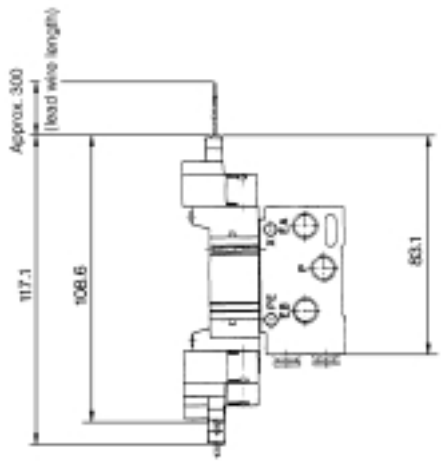

M type plug connector (M)

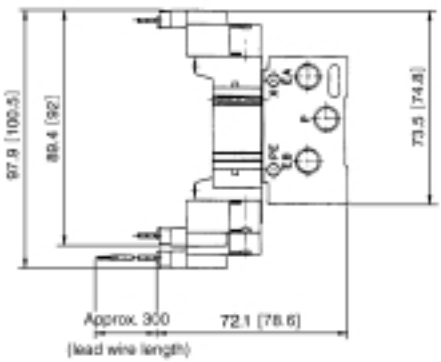

Stations n	2	3	4	5	6	7	8	9	10	11	12	13	14	15	16	17	18	19	20
L1	47.5	60	72.5	85	97.5	110	122.5	135	147.5	160	172.5	185	197.5	210	222.5	235	247.5	260	272.5
L2	39.5	52	64.5	77	89.5	102	114.5	127	139.5	152	164.5	177	189.5	202	214.5	227	239.5	252	264.5

CAD Type 42 manifold ... SS5Y32, #4

SY5000: SS5Y5-42-Stations-C6, C8

CAD

Note) [ ]: Values for AC
< >: Values with surge voltage suppressor

Grommet (G)

Scale: 35%

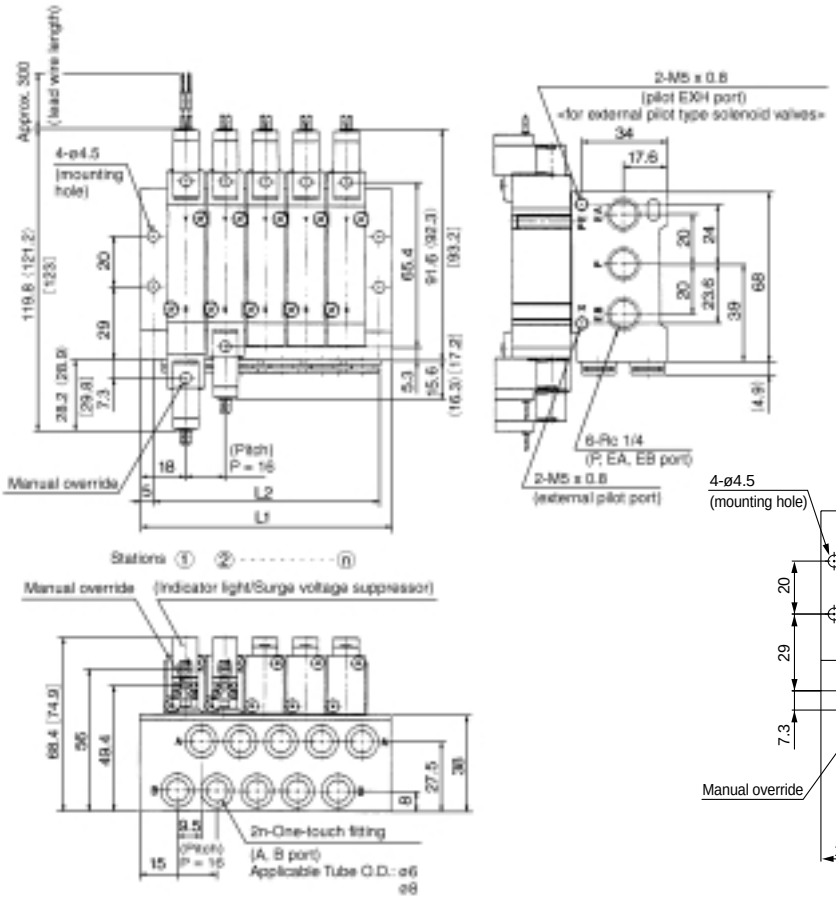

With interface regulator (with gauge)

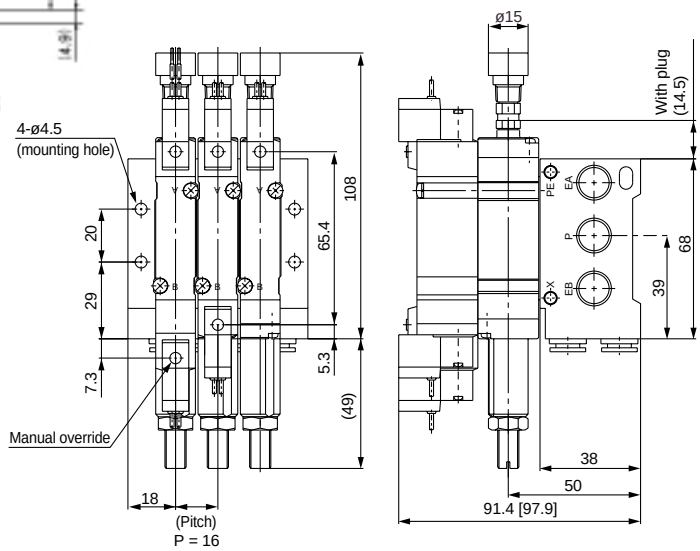

L type plug connector (L)

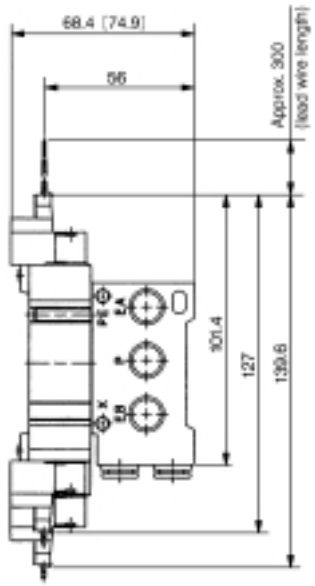

M type plug connector (M)

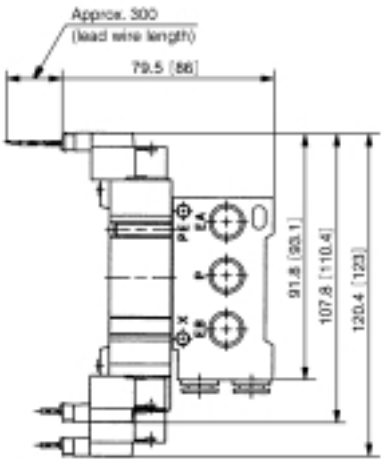

DIN terminal (D)

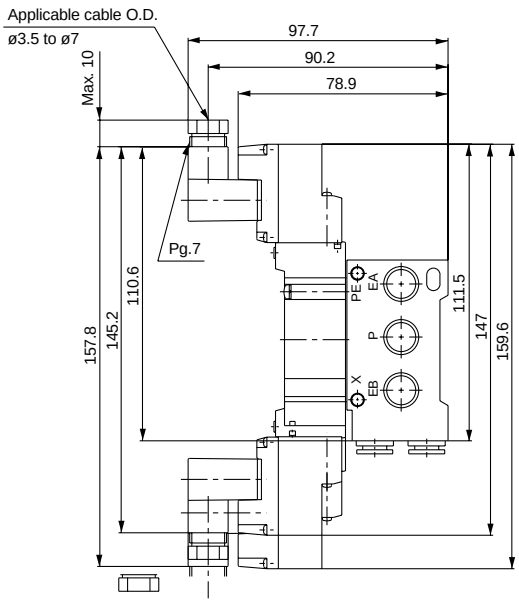

Stations n	2	3	4	5	6	7	8	9	10	11	12	13	14	15	16	17	18	19	20
L1	52	68	84	100	116	132	148	164	180	196	212	228	244	260	276	292	308	324	340
L2	42	58	74	90	106	122	138	154	170	186	202	218	234	250	266	282	298	314	330

CAD Type 42 manifold ... SS5Y52, #5

SY5000: SS5Y5-42-Stations-02

Note) [ ]: Values for AC
< >: Values with surge voltage suppressor

Grommet (G)

Scale: 35%

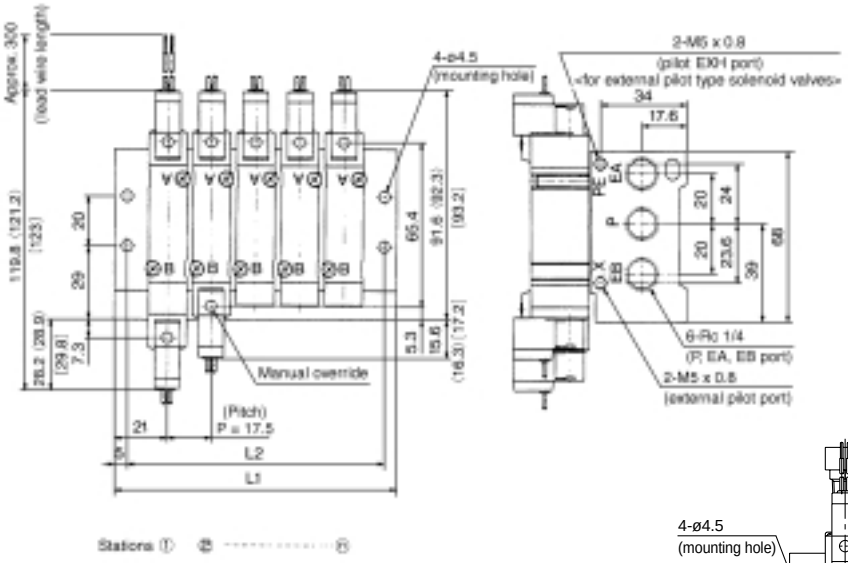

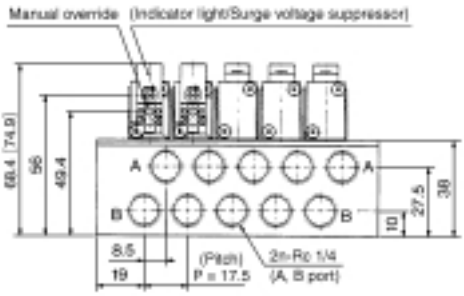

With interface regulator (with gauge)

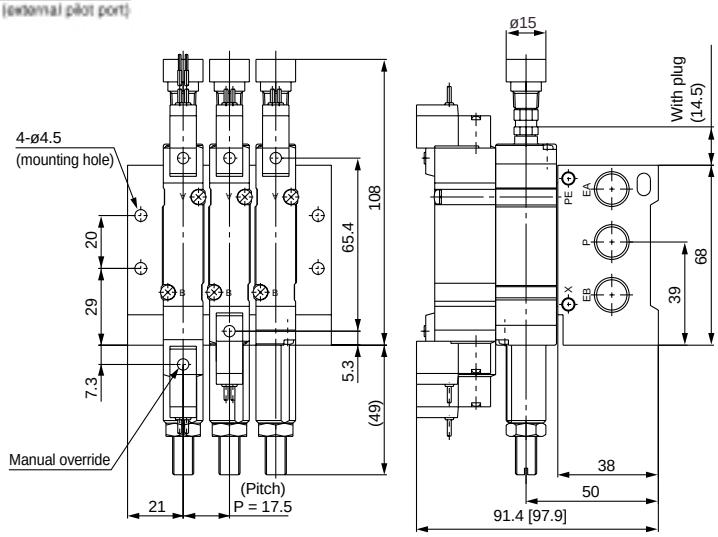

L type plug connector (L)

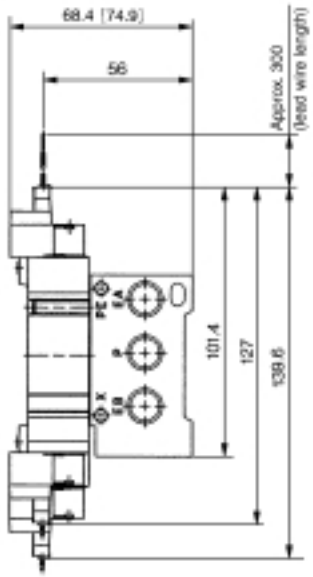

M type plug connector (M)

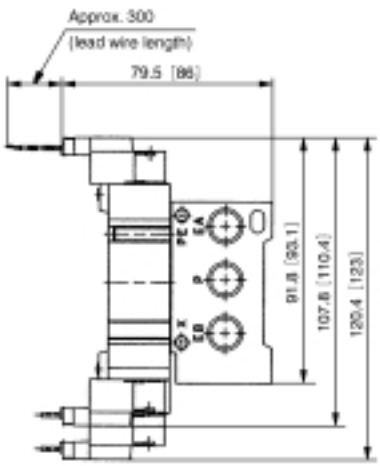

DIN terminal (D)

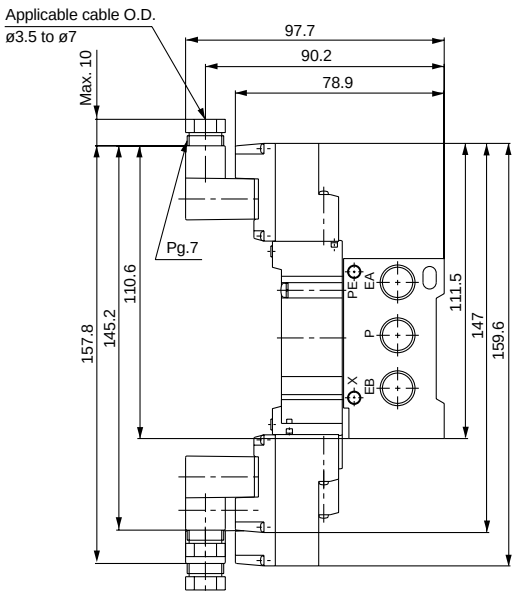

Stations n	2	3	4	5	6	7	8	9	10	11	12	13	14	15	16	17	18	19	20
L1	59.5	77	94.5	112	129.5	147	164.5	182	199.5	217	234.5	252	269.5	287	304.5	322	339.5	357	374.5
L2	49.5	67	84.5	102	119.5	137	154.5	172	189.5	207	224.5	242	259.5	277	294.5	312	329.5	347	364.5

Type 42 manifold ... SS5Y52, #4

SY7000: SS5Y7-42-Stations-02, C10

CAD

Note) [ ]: Values for AC
< >: Values with surge voltage suppressor

Grommet (G)

Scale: 35%

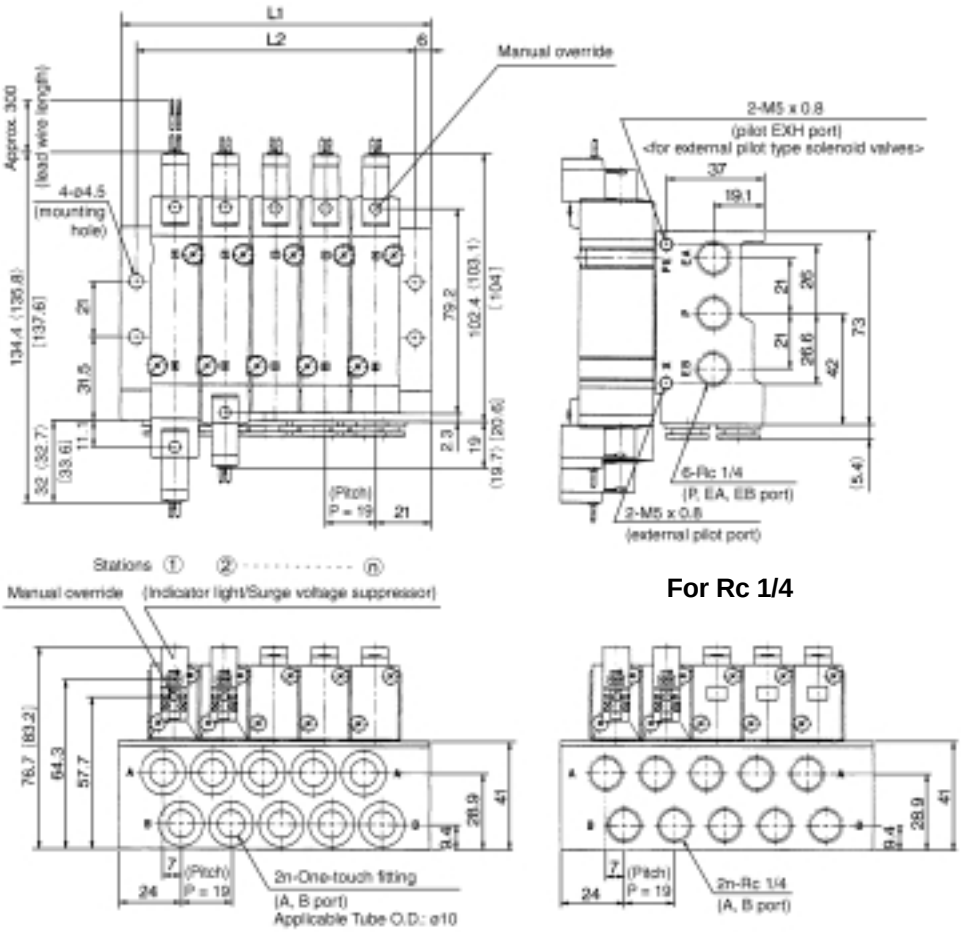

L type plug connector (L)

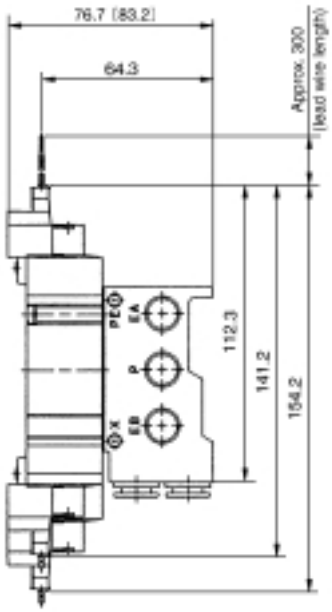

M type plug connector (M)

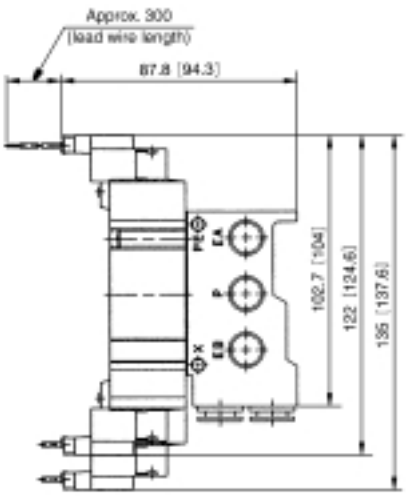

DIN terminal (D)

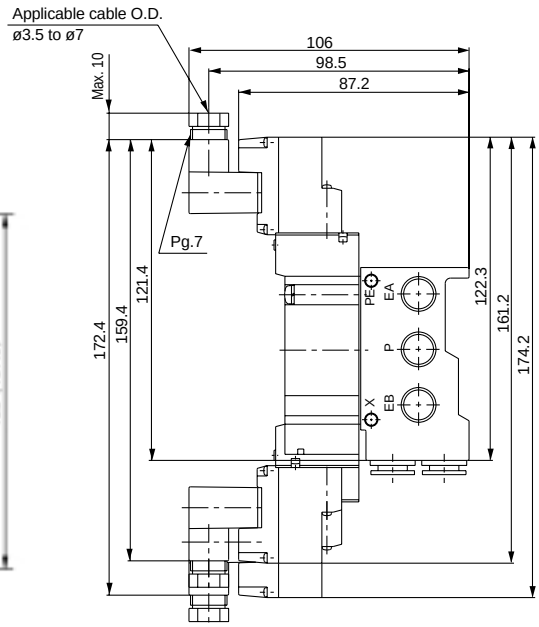

Stations n	2	3	4	5	6	7	8	9	10	11	12	13	14	15	16	17	18	19	20
L1	61	80	99	118	137	156	175	194	213	232	251	270	289	308	327	346	365	384	403
L2	49	68	87	106	125	144	163	182	201	220	239	258	277	296	315	334	353	372	391

CAD Type 42 manifold ... SS5Y72, #3

Type 43

SY9000
Base Mounted Type Manifold
Stacking Type/Individual Wiring

How to Order Manifolds

SS5Y 9 – 43 – 05 U [ ] – C8 – [ ]

Manifold series

9	SY9000

Stations

Symbol	Stations
02	2 stations
⋮	⋮
20	20 stations

∗ Includes the number of blanking plate assemblies.

P/R port position

Symbol	Position	Applicable stations
U	U side	2 to 10
D	D side	
B	Both sides	2 to 20

SUP/EXH block assembly specification

Symbol	Specification
Nil	Standard/Internal pilot
R	External pilot
S	Internal pilot with built-in silencer
RS	External pilot with built-in silencer

Option

Symbol	Mounting
Nil	Direct mount
D	DIN rail mount (with DIN rail)
DO	DIN rail mount (without DIN rail)
D∗	When a DIN rail longer than the specified stations is necessary, indicate the number of required stations at the "∗" symbol.

A/B port size

Symbol	Specification
C8	ø8 One-touch fitting
C10	ø10 One-touch fitting
C12	ø12 One-touch fitting
02	Rc 1/4
03	Rc 3/8
M	Mixed

∗ For mixed specifications, order separately on a manifold specification sheet.

How to Order Manifold Assemblies (Example)

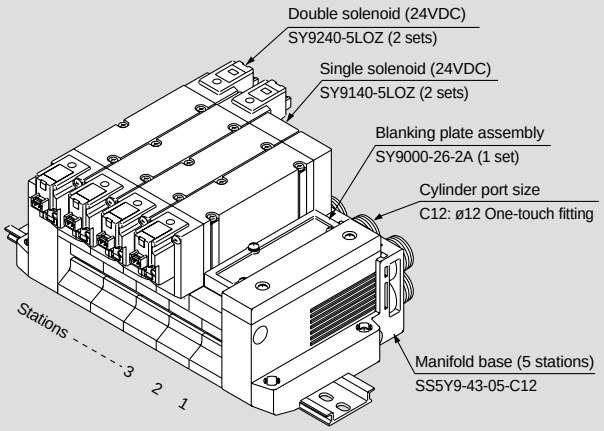

SS5Y9-43-05B-C12 ..... 1 set (Type 43, 5 station manifold base part no.)
∗ **SY9000-26-2A** ..... 1 set (Blanking plate assembly part no.)
∗ **SY9140-5LOZ** ..... 2 sets (Single solenoid part no.)
∗ **SY9240-5LOZ** ..... 2 sets (Double solenoid part no.)

→ To order valves and options mounted onto the manifold at the factory, list the valve/option with an asterisk (∗) in front of each part number.

Add the valve and option part numbers in order starting from the first station as shown above. When entry of part numbers becomes complicated, indicate on a manifold specification sheet. (Manifold Specification Sheet on page 195)

How to Order Valves

SY 9 2 40 □ – 5 L □ □

Series

9	SY9000

Type of actuation

1	2 position single
2	2 position double
3	3 position closed center
4	3 position exhaust center
5	3 position pressure center

Pilot type

Nil	Internal pilot
R	External pilot

Rated voltage

DC specifications

5	24VDC
6	12VDC
V	6VDC
S	5VDC
R	3VDC

AC specifications (50/60Hz)

1	100VAC
2	200VAC
3	110VAC [115VAC]
4	220VAC [230VAC]

∗ DC specifications for "D" and "DO" are only available for 24VDC and 12VDC.

Manual override

Nil	Non-locking push type
D	Push-turn locking slotted type
E	Push-turn locking lever type

Indicator light/Surge voltage suppressor

Electrical entry G, H, L, M

Nil	Without indicator light/surge voltage suppressor
S	With surge voltage suppressor
Z	With indicator light/surge voltage suppressor
R	With surge voltage suppressor (non-polar type)
U	With indicator light/surge voltage suppressor (non-polar type)

Note 1) For AC, there is no "S" specification, since it is integrated with the rectifier.
Note 2) "R" and "U" are available for DC only.

Electrical entry D

Nil	Without indicator light/surge voltage suppressor
S	With surge voltage suppressor (non-polar type)
Z	With indicator light/surge voltage suppressor (non-polar type)

Note 1) "DO"Z is not available.
Note 2) For AC, there is no "S" specification, since it is integrated with the rectifier.

Electrical entry

24V, 12V, 6V, 5V, 3VDC/100V, 110V, 200V, 220VAC			24V, 12VDC 100V, 110V, 200V, 220VAC
Grommet	**L type plug connector**	**M type plug connector**	**DIN terminal**
G: Lead wire length 300mm **H:** Lead wire length 600mm	**L:** With lead wire (length 300mm) **LN:** Without lead wire **LO:** Without connector	**M:** With lead wire (length 300mm) **MN:** Without lead wire **MO:** Without connector	**D:** With connector **DO:** Without connector

Note 1) "LN" and "MN" include 2 sockets.
Note 2) DIN43650C standard DIN terminal "Y" is also available.
Refer to page 189 for details.

Manifold specifications

Model			SS5Y9-43
Applicable valve			SY9□40
Manifold type			Stacking type
P (SUP)/R (EXH) method			Common SUP/EXH
Valve stations			2 to 20 stations Note 1)
A, B port specifications	Location		Base
	Direction		Side
Port size	P, EA, EB port		C12 (ø12 One-touch fitting)
	A, B port		Rc 1/4 Rc 3/8 C8 (ø8 One-touch fitting) C10 (ø10 One-touch fitting) C12 (ø12 One-touch fitting)
Valve effective area Note 2) mm² (Cv factor)			C12: P to A/B 30.46 (1.69) A/B to EA/EB 32.98 (1.83)
Manifold base weight W (g) n: Number of stations			W = 107n + 330

Note 1) For 10 stations or more, supply pressure to P port on both sides and exhaust from EA and EB ports on both sides.

Note 2) Value when manifold base (5 stations) is mounted, with single action 2 position type.

Note 3) Refer to page 89 for manifold options.

SY9000: SS5Y9-43-Stations D□-02, 03, C8, C10, C12-(D)

Note) [ ]: Values for AC
< >: Values with surge voltage suppressor

∗ When P/R ports are located on the D side, the designated P/R ports on the other side are plugged.

Scale: 25%

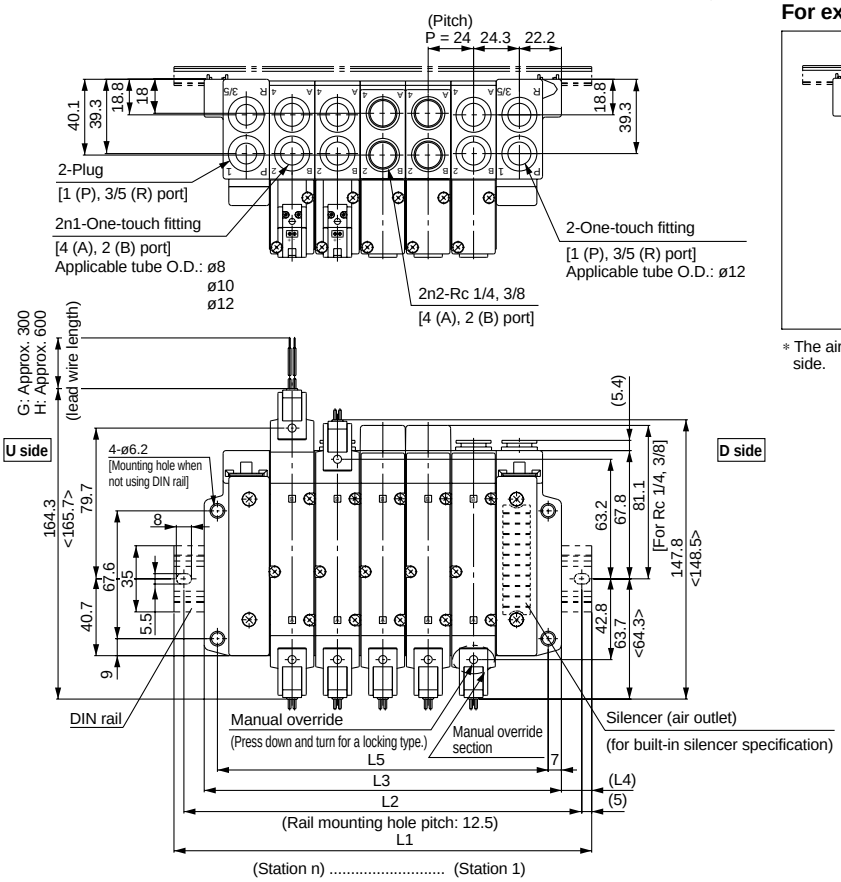

For external pilot specification

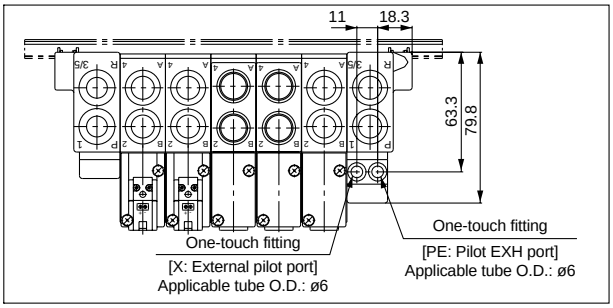

∗ The air outlet and external pilot locations for the built-in silencer type are on the D side.

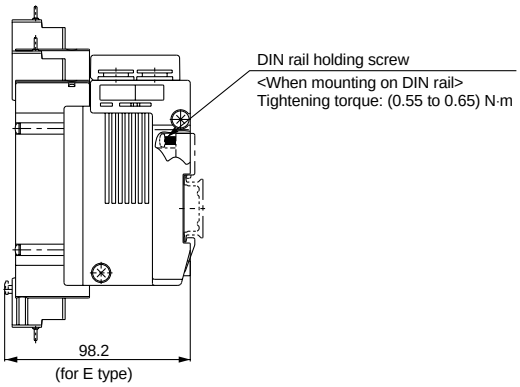

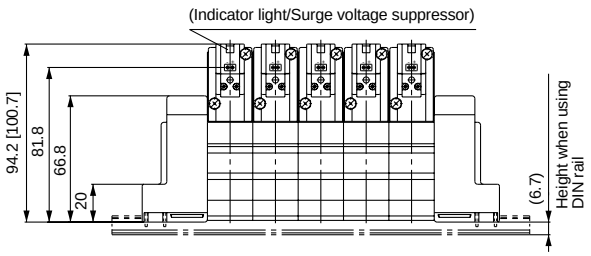

Stations n	2	3	4	5	6	7	8	9	10
L1	148	173	198	223	248	260.5	285.5	310.5	335.5
L2	137.5	162.5	187.5	212.5	237.5	250	275	300	325
L3	117	141	165	189	213	237	261	285	309
L4	15.5	16	16.5	17	17.5	12	12.5	13	13.5
L5	103	127	151	175	199	223	247	271	295

L type plug connector (L)

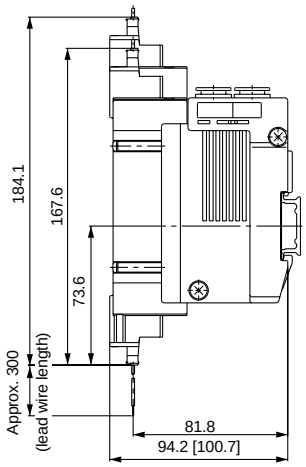

M type plug connector (M)

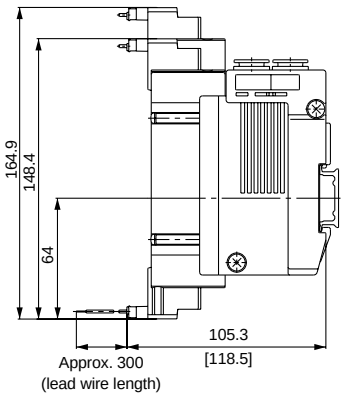

DIN terminal (D)

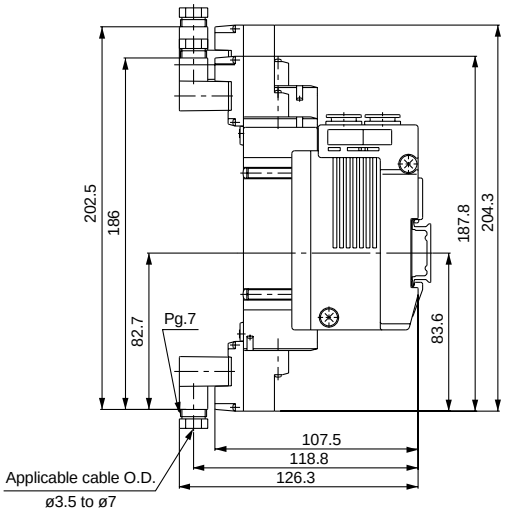

SY9000: SS5Y9-43-Stations U□-02, 03, C8, C10, C12-(D)

Note) [ ]: Values for AC
< >: Values with surge voltage suppressor

∗ When P/R ports are located on the U side, the designated P/R ports on the other side are plugged.

Scale: 25%

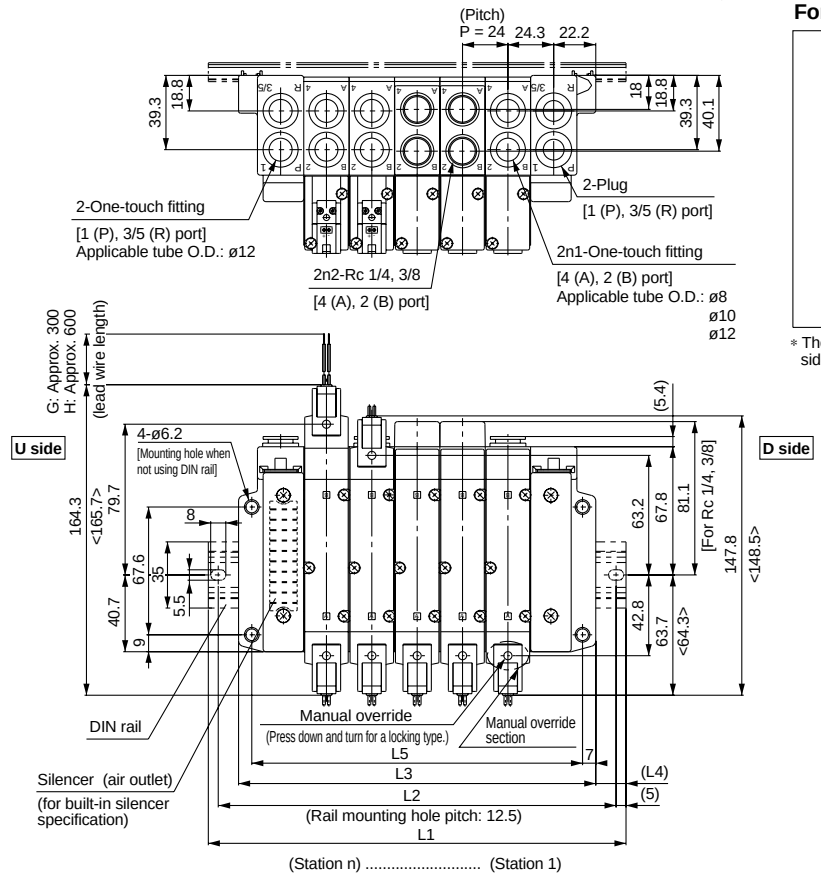

For external pilot specification

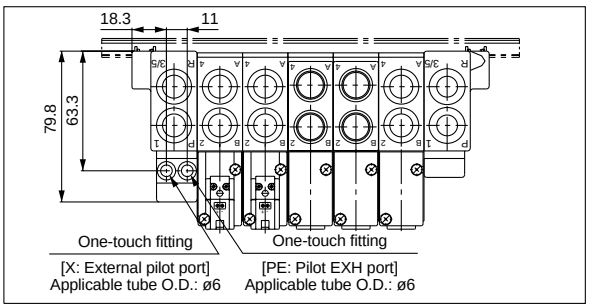

∗ The air outlet and external pilot locations for the built-in silencer type are on the U side.

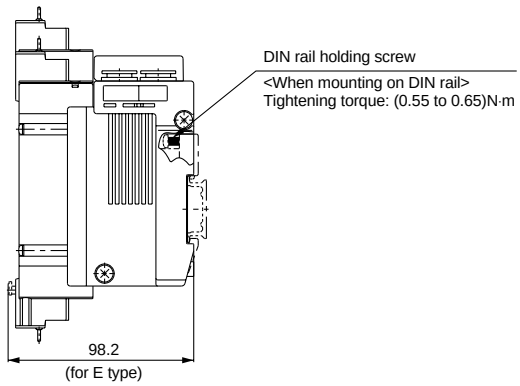

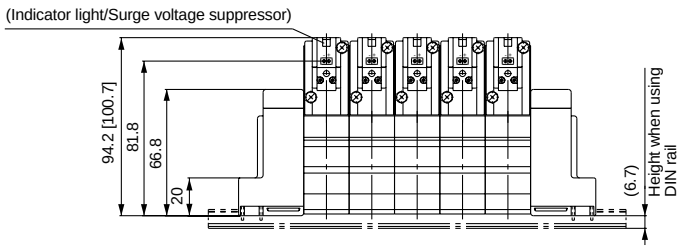

Stations n	2	3	4	5	6	7	8	9	10
L1	148	173	198	223	248	260.5	285.5	310.5	335.5
L2	137.5	162.5	187.5	212.5	237.5	250	275	300	325
L3	117	141	165	189	213	237	261	285	309
L4	15.5	16	16.5	17	17.5	12	12.5	13	13.5
L5	103	127	151	175	199	223	247	271	295

L type plug connector (L)

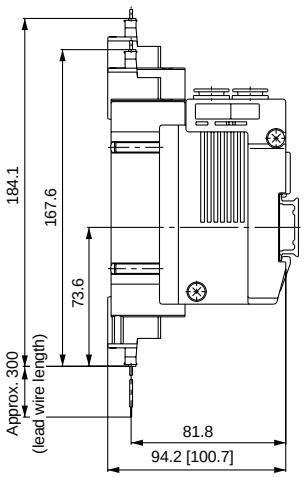

M type plug connector (M)

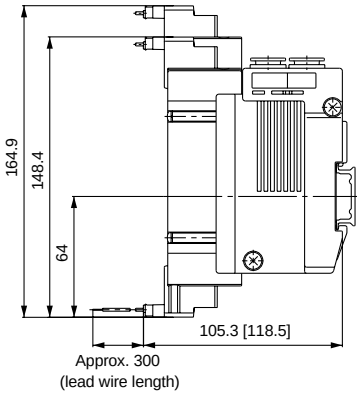

DIN terminal (D)

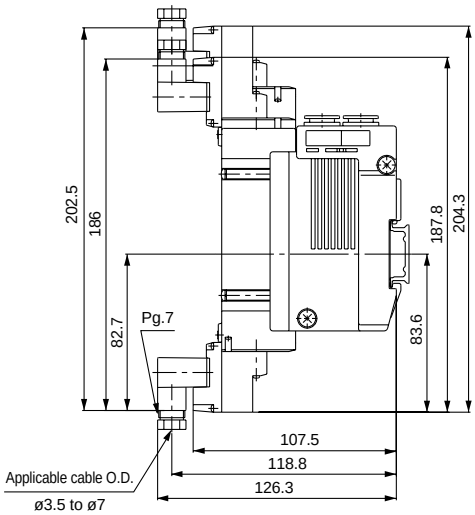

SY9000: SS5Y9-43-Stations B□-02, 03, C8, C10, C12-(D)

Note) [ ]: Values for AC
< >: Values with surge voltage suppressor

∗ When P/R ports are designated as B, P/R ports on both sides are open.

Scale: 25%

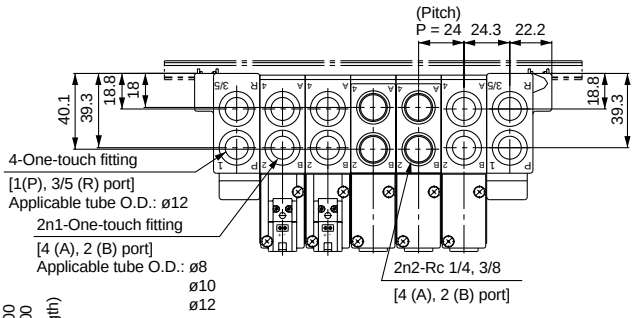

For external pilot specification

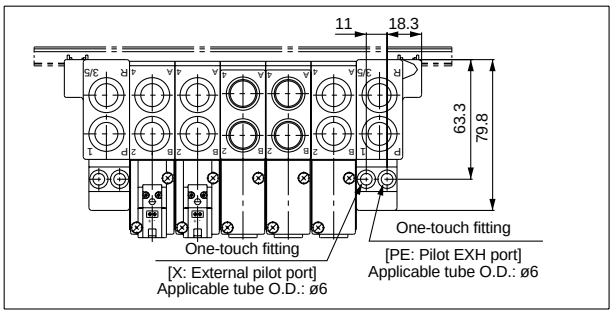

∗ The air outlet and external pilot locations for the built-in silencer type are on the B side (both sides) .

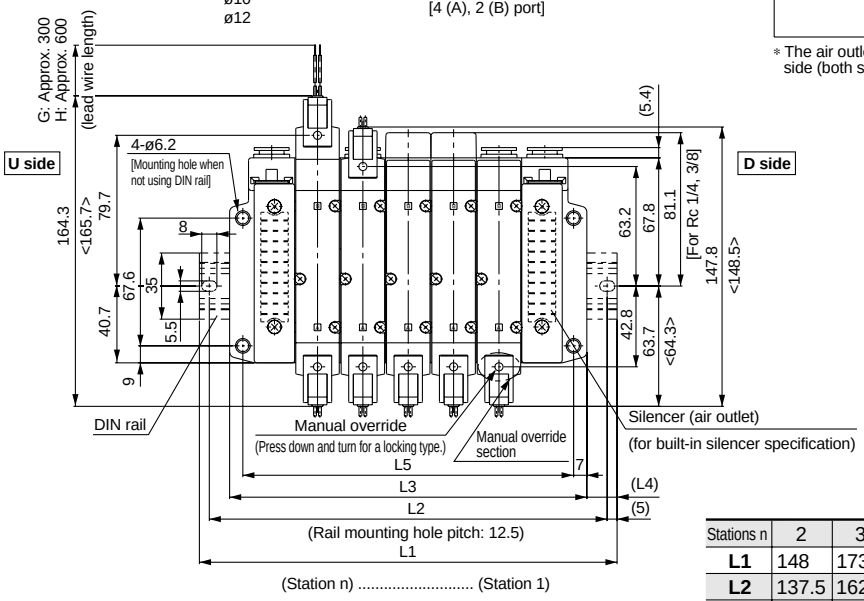

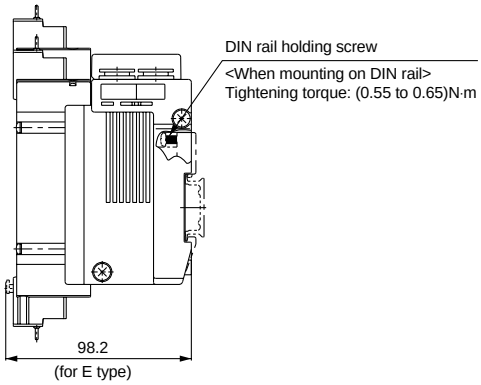

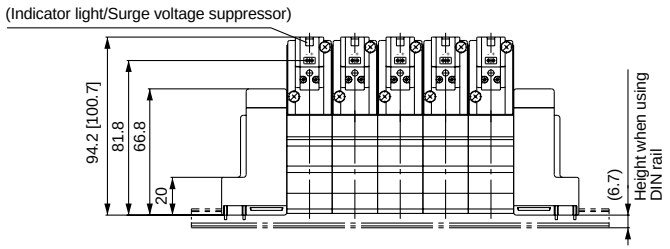

Stations n	2	3	4	5	6	7	8	9	10
L1	148	173	198	223	248	260.5	285.5	310.5	335.5
L2	137.5	162.5	187.5	212.5	237.5	250	275	300	325
L3	117	141	165	189	213	237	261	285	309
L4	15.5	16	16.5	17	17.5	12	12.5	13	13.5
L5	103	127	151	175	199	223	247	271	295

Stations n	11	12	13	14	15	16	17	18	19	20
L1	360.5	385.5	410.5	435.5	460.5	485.5	510.5	535.5	560.5	573
L2	350	375	400	425	450	475	500	525	550	562.5
L3	333	357	381	405	429	453	477	501	525	549
L4	14	14.5	15	15.5	16	16.5	17	17.5	18	12
L5	319	343	367	391	415	439	463	487	511	535

L type plug connector (L)

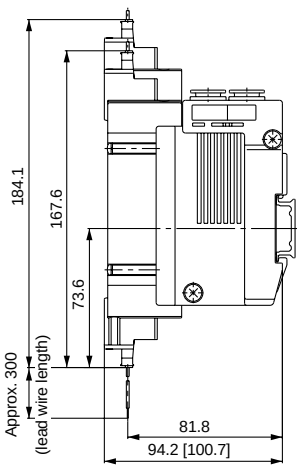

M type plug connector (M)

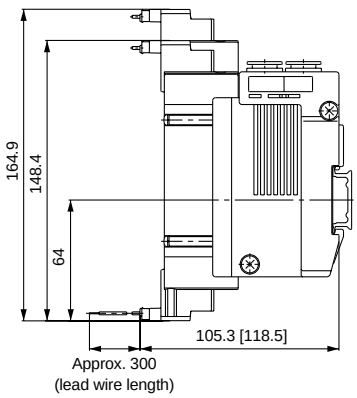

DIN terminal (D)

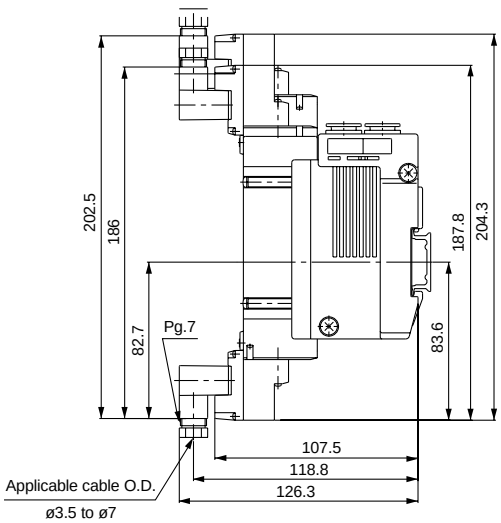

Type 41P
Type 42P

SY3000/5000/7000
Base Mounted Type Manifold
Bar Stock/Flat Ribbon Cable

CAD

How to Order Manifolds

Type 41P/Compact type

SS5Y 5 — 41P — 05 — C8

Manifold series

3	SY3000
5	SY5000

Stations

03	3 stations
⋮	⋮
12	12 stations

Note) 4 to 12 stations for SS5Y3

A/B port size

Symbol	Port size	Applicable series
M5	M5 x 0.8	SY3000
C4	ø4 One-touch fitting	
C6	ø6 One-touch fitting	
01	Rc 1/8	SY5000
C6	ø6 One-touch fitting	
C8	ø8 One-touch fitting	

Type 42P/Common external pilot type

SS5Y 5 — 42P — 05 — C8

Manifold series

3	SY3000
5	SY5000
7	SY7000

Stations

03	3 stations
⋮	⋮
12	12 stations

Note) 4 to 12 stations for SS5Y3

A/B port size

Symbol	Port size	Applicable series
01	Rc 1/8	SY3000
C4	ø4 One-touch fitting	
C6	ø6 One-touch fitting	
02	Rc 1/4	SY5000
C6	ø6 One-touch fitting	
C8	ø8 One-touch fitting	
02	Rc 1/4	SY7000
C10	ø10 One-touch fitting	

How to Order Manifold Assemblies (Example)

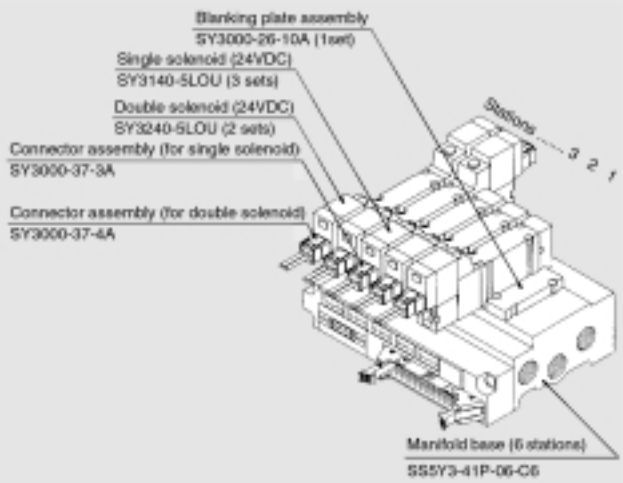

SS5Y3-41P-06-C6 .....1 set (Type 41P, 6 station manifold base part no.)
∗ **SY3000-26-10A** ..... 1 set (Blanking plate assembly part no.)
∗ **SY3140-5LOU** ..... 3 sets (Single solenoid part no.)
∗ **SY3240-5LOU** ..... 2 sets (Double solenoid part no.)
∗ **SY3000-37-3A** ..... 3 sets (Connector assembly part no.)
∗ **SY3000-37-4A** ..... 2 sets (Connector assembly part no.)

→ To order valves and options mounted onto the manifold at the factory, list the valve/option with an asterisk (∗) in front of each part number.

Add the valve and option part numbers in order starting from the first station as shown above. When entry of part numbers becomes complicated, indicate on a manifold specification sheet. (Manifold Specification Sheet on pages 196 to 198)

SMC

How to Order Valves

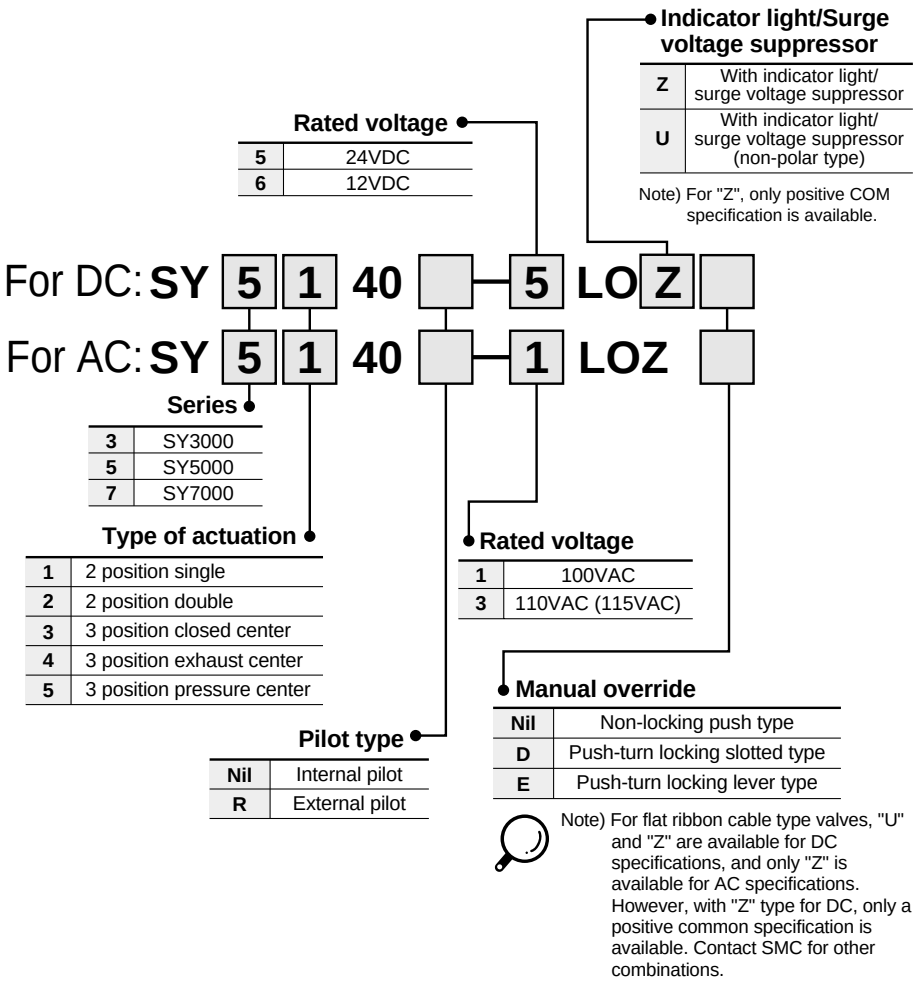

Note) For flat ribbon cable type valves, "U" and "Z" are available for DC specifications, and only "Z" is available for AC specifications. However, with "Z" type for DC, only a positive common specification is available. Contact SMC for other combinations.

How to Order Connector Assemblies

For 12, 24VDC

Specification	SY3000	SY5000/7000
Single solenoid	SY3000-37-3A	SY5000-37-3A
Double solenoid/ 3 position	SY3000-37-4A	SY5000-37-4A
Single solenoid with spacer assembly	SY5000-37-3A	SY5000-37-5A
Double solenoid/3 position with spacer assembly	SY3000-37-6A	SY5000-37-6A

For 100VAC

Specification	SY3000	SY5000/7000
Single solenoid	SY3000-37-32A	SY5000-37-15A
Double solenoid/ 3 position	SY3000-37-33A	SY5000-37-16A
Single solenoid with spacer assembly	SY5000-37-15A	SY5000-37-17A
Double solenoid/3 position with spacer assembly	SY3000-37-34A	SY5000-37-18A

For 110VAC (115VAC)

Specification	SY3000	SY5000/7000
Single solenoid	SY3000-37-35A	SY5000-37-19A
Double solenoid/ 3 position	SY3000-37-36A	SY5000-37-20A
Single solenoid with spacer assembly	SY5000-37-19A	SY5000-37-21A
Double solenoid/3 position with spacer assembly	SY3000-37-37A	SY5000-37-22A

- **External wiring is bundled for one-touch wiring**
- **Clean appearance**

With the flat ribbon cable type, each valve is wired to the printed circuit board of the manifold base to allow the external wiring to be bundled with a 26 pin MIL connector for one-touch wiring.

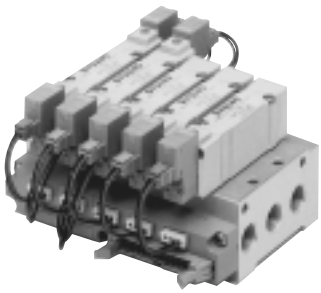

Flat cable manifold specifications

Model		SS5Y3-41P	SS5Y3-42P	SS5Y5-41P	SS5Y5-42P	SS5Y7-42P
Applicable valve		SY3□40		SY5□40		SY7□40
Manifold type		Single base type/B mount				
P (SUP)/R (EXH) method		Common SUP/EXH				
Valve stations		4 to 12 stations Note 1)		3 to 12 stations Note 1)		
A, B port specification	Location	Base				
	Direction	Side				
Port size	P, EA, EB port	Rc 1/8		Rc 1/4		Rc 1/4
	A, B port	M5 x 0.8 C4 (ø4 One-touch fitting) C6 (ø6 One-touch fitting)	Rc 1/8 C4 (ø4 One-touch fitting) C6 (ø6 One-touch fitting)	Rc 1/8 C6 (ø6 One-touch fitting) C8 (ø8 One-touch fitting)	Rc 1/4 C6 (ø6 One-touch fitting) C8 (ø8 One-touch fitting)	Rc 1/4 C10 (ø10 One-touch fitting)
Valve effective area Note 2) mm² (Cv factor)		C6: P to A/B 3.96 (0.22) A/B to EA/EB 4.14 (0.23)		C8: P to A/B 9.54 (0.53) A/B to EA/EB 9.0 (0.5)		C10: P to A/B 16.2 (0.9) A/B to EA/EB 16.2 (0.9)
Manifold base weight W (g) n: Number of stations		W = 39n + 83	W = 48n + 99	W = 67n + 118	W = 88n + 151	W = 109n + 174
Applicable flat ribbon cable connector		Flat ribbon cable connector, Socket: 26 pin MIL, With strain relief, MIL-C-83503 conformity				
Internal wiring		Common positive and negative COM (Only positive COM for "Z" type)				
Rated voltage		12, 24VDC/100, 110VAC				

Note 1) For 10 stations or more (5 stations or more in case of SS5Y7), supply pressure to P port on both sides and exhaust from EA and EB ports on both sides.
Note 2) Value when manifold base (5 stations) is mounted, with single action 2 position type.
Note 3) The withstand voltage specification for the wiring unit is equivalent to JIS C0704, class 1.
Note 4) Refer to page 89 for manifold options.

Manifold internal wiring (non-polar type)

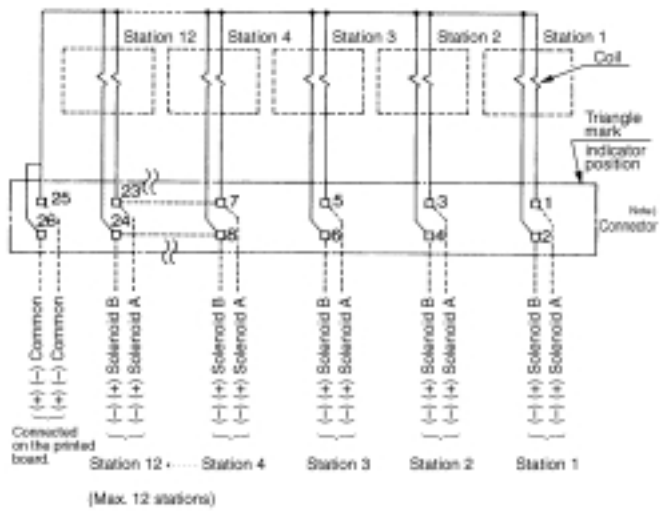

Note) Terminal numbers are not indicated on the connector. The terminal numbers indicated in the connector schematic shown above show the correlation if the inserted connector's flat ribbon cable were numbered 1 to 26 from the triangle mark side, as shown in the figure to the right.

Note 1) For 10 stations or more, wire both of the common poles.
Note 2) For single solenoids, connect to the solenoid A side.
Note 3) The maximum number of stations is 12. Contact SMC if more than 12 stations are required.

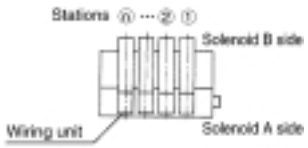

⚠Caution

Non-polar type (U) valves with DC electrical connection can be used for both negative and positive COM. However, always use the positive COM with the "Z" type, since valves will not be actuated when the negative COM is used.

SY3000: SS5Y3-41P-Stations-M5, C4, C6

CAD Note) [ ]: Values for AC

Scale: 35%

For M5 x 0.8

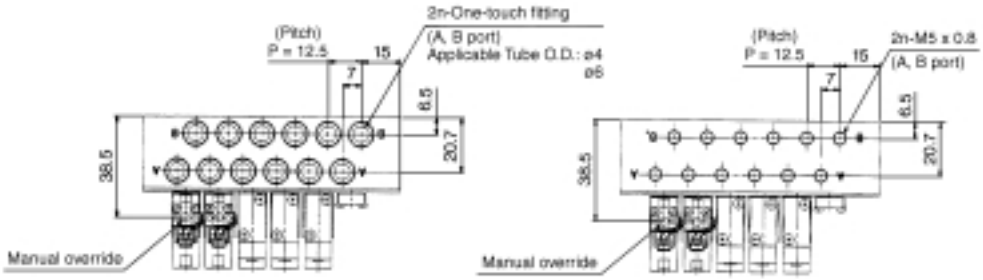

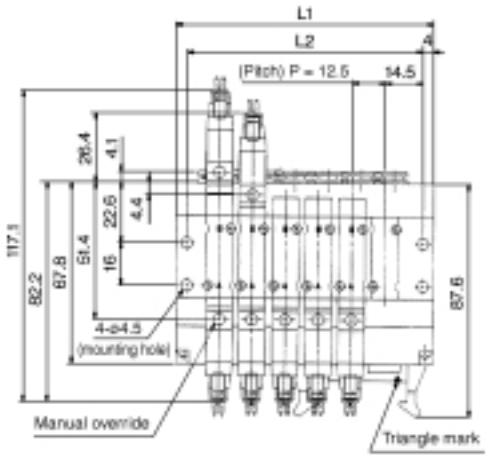

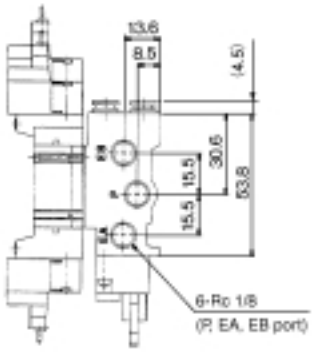

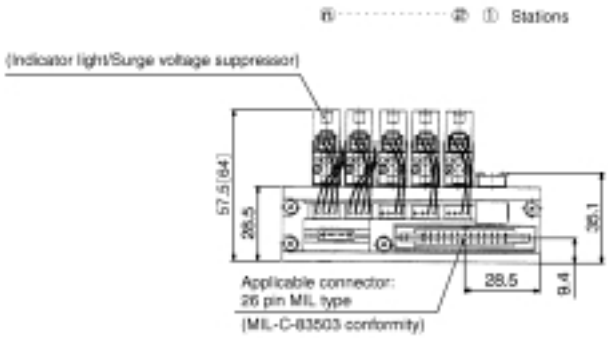

With interface regulator (with gauge)

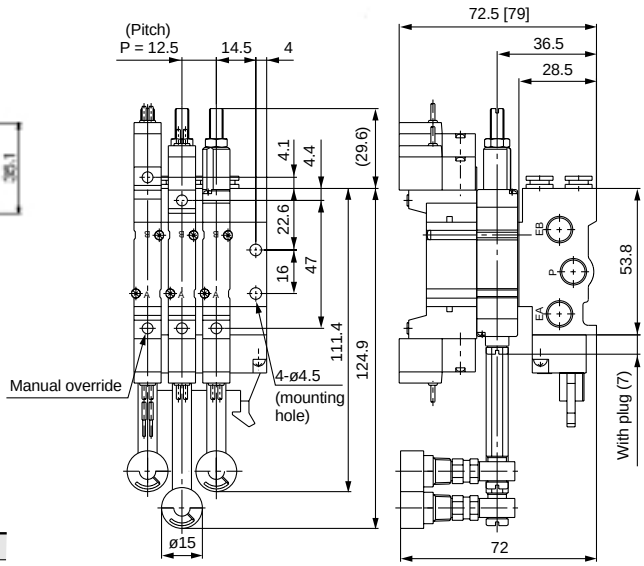

Stations n	4	5	6	7	8	9	10	11	12
L1	72.5	85	97.5	110	122.5	135	147.5	160	172.5
L2	64.5	77	89.5	102	114.5	127	139.5	152	164.5

CAD Type 41P manifold ... SS5Y32, #6

SY5000: SS5Y5-41P- Stations -01, C6, C8

CAD

Note) [ ]: Values for AC

Scale: 35%

For Rc 1/8

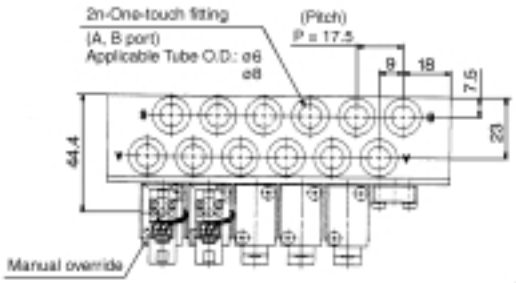

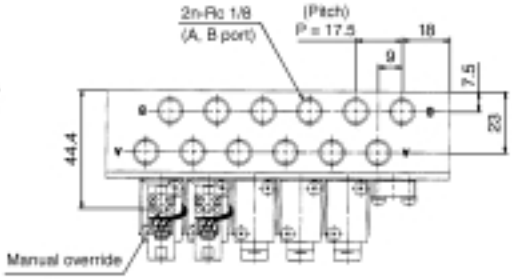

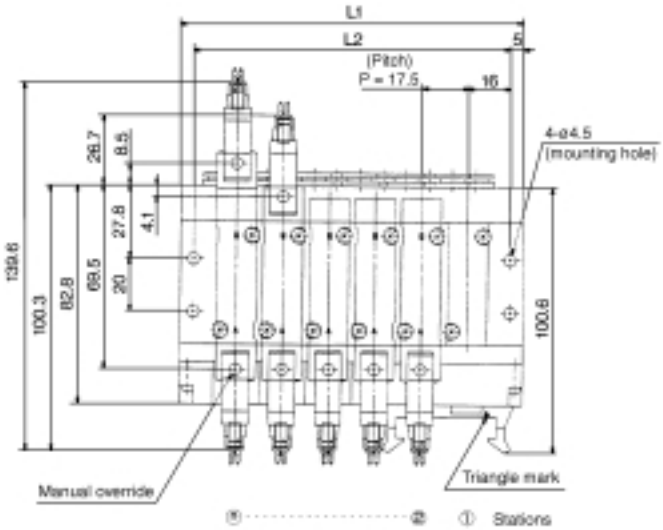

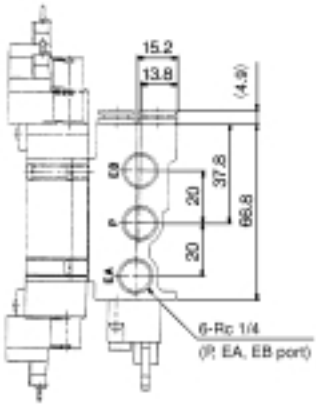

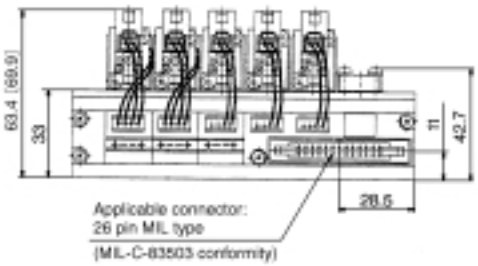

With interface regulator (with gauge)

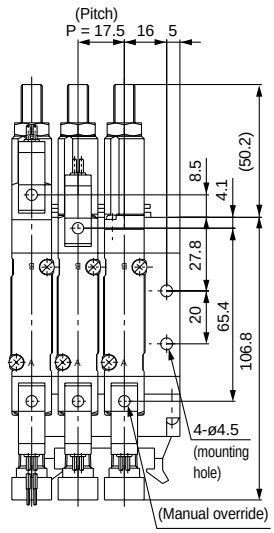

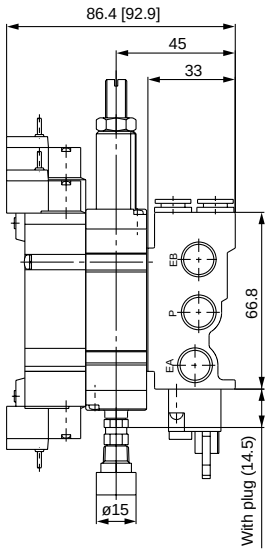

Stations n	3	4	5	6	7	8	9	10	11	12
L1	77	94.5	112	129.5	147	164.5	182	199.5	217	234.5
L2	67	84.5	102	119.5	137	154.5	172	189.5	207	224.5

CAD Type 41P manifold ... SS5Y52, #6

SY3000: SS5Y3-42P-Stations-01, C4, C6

CAD

Note) [ ]: Values for AC

Scale: 35%

For Rc 1/8

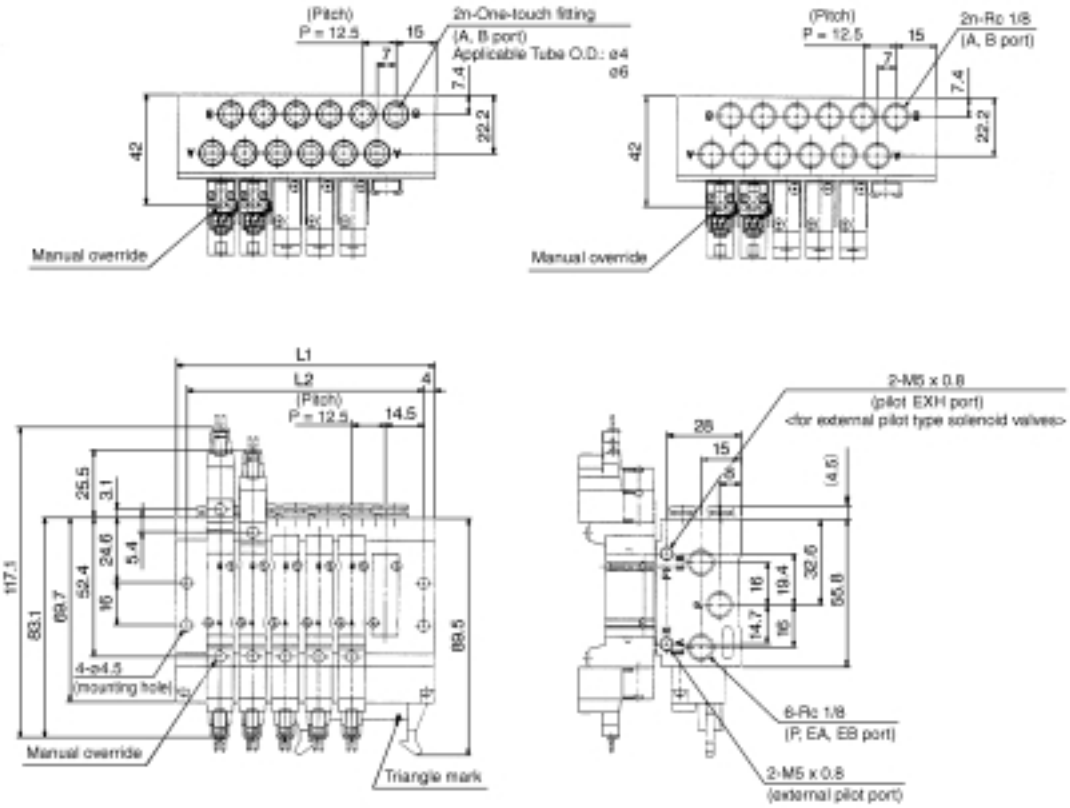

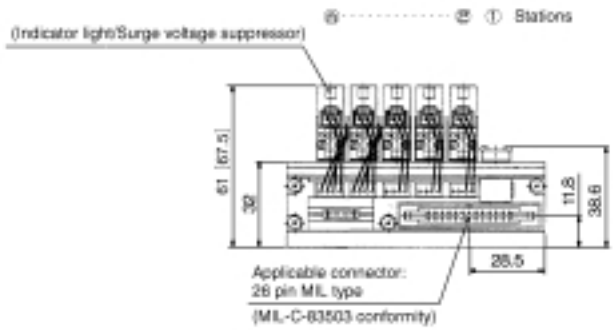

With interface regulator (with gauge)

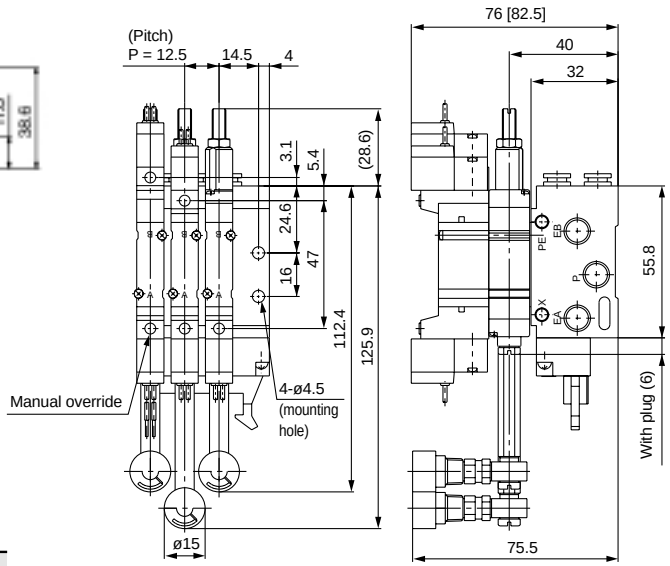

Stations n	4	5	6	7	8	9	10	11	12
L1	72.5	85	97.5	110	122.5	135	147.5	160	172.5
L2	64.5	77	89.5	102	114.5	127	139.5	152	164.5

CAD Type 42P manifold ... SS5Y32, #7

SY5000: SS5Y5-42P- Stations -02, C6, C8

Note) [ ]: Values for AC

For Rc 1/4

Scale: 35%

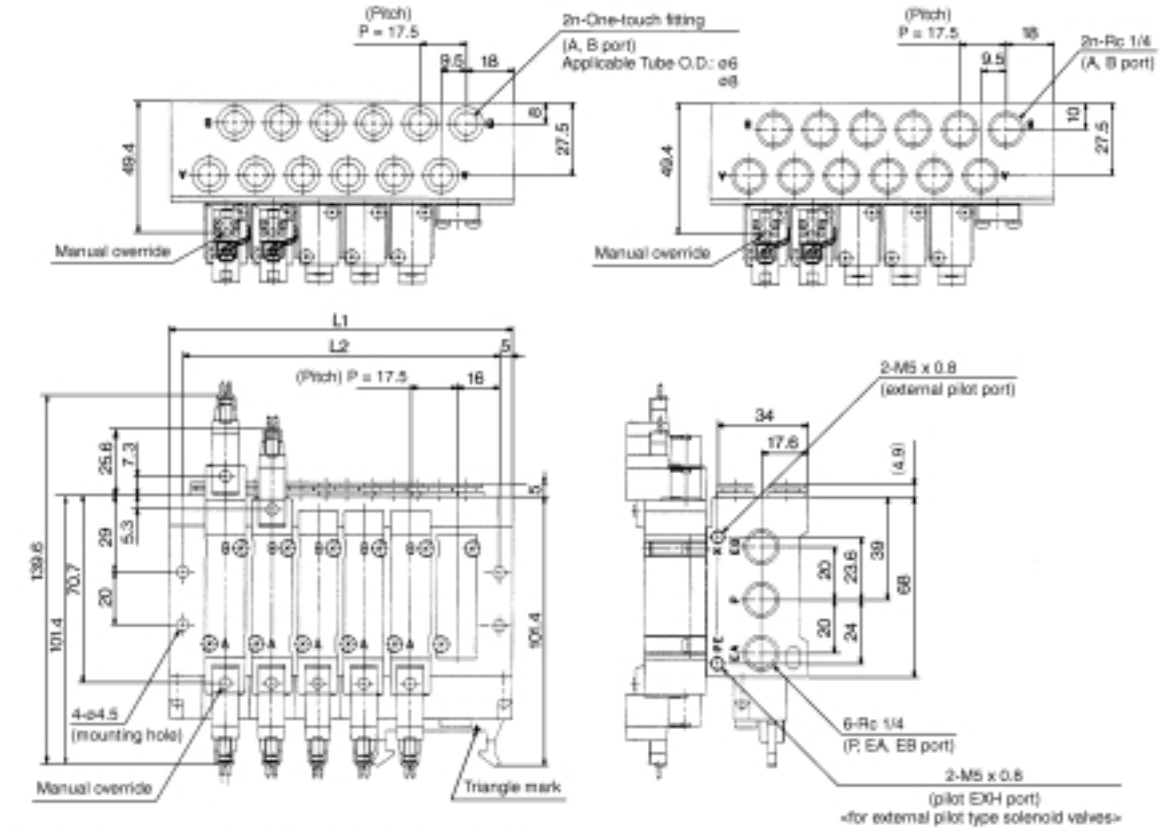

With interface regulator (with gauge)

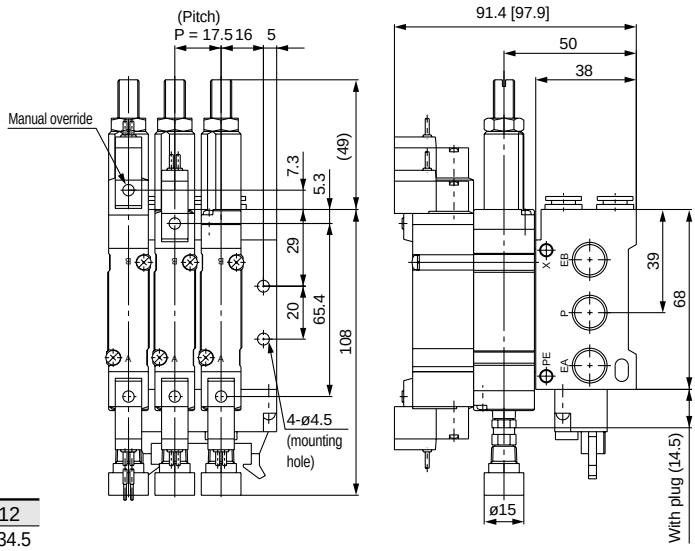

Stations n	3	4	5	6	7	8	9	10	11	12
L1	77	94.5	112	129.5	147	164.5	182	199.5	217	234.5
L2	67	84.5	102	119.5	137	154.5	172	189.5	207	224.5

Type 42P manifold ... SS5Y52, #7

SY7000: SS5Y7-42P- Stations -02, C10

CAD

Note) [ ]: Values for AC

For Rc 1/4

Scale: 35%

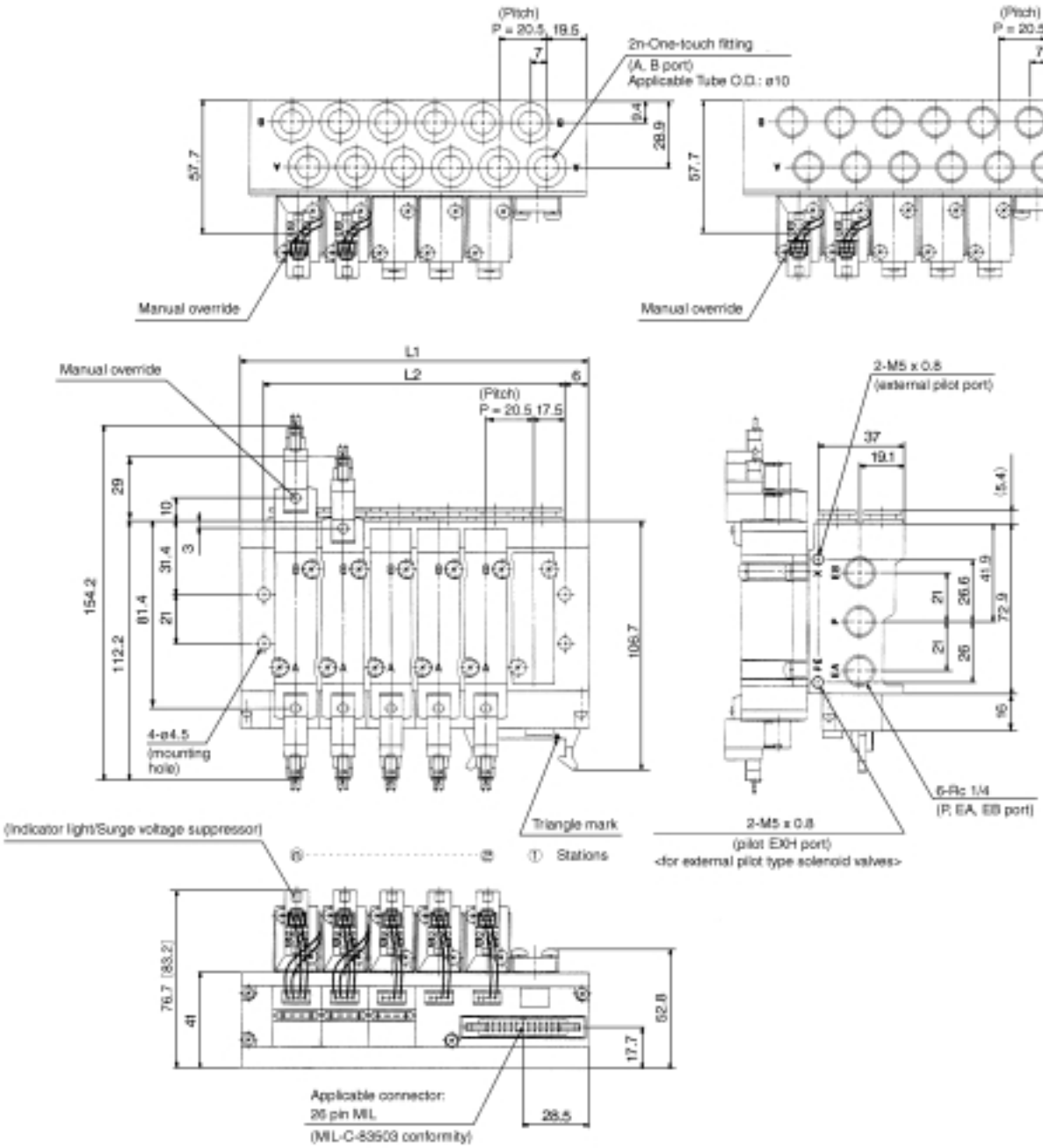

Stations n	3	4	5	6	7	8	9	10	11	12
L1	88	108.5	129	149.5	170	190.5	211	231.5	252	272.5
L2	76	96.5	117	137.5	158	178.5	199	219.5	240	260.5

CAD Type 42P manifold ... SS5Y72, #4

Type 43P

SY9000
Base Mounted Type Manifold
Stacking Type/Flat Ribbon Cable

How to Order Manifolds

SS5Y9 – 43P – 05 U [ ] – C8 – [ ]

Manifold series

9	SY9000

Stations

Symbol	Stations
04	4 stations
⋮	⋮
12	12 stations

∗ Includes the number of blanking plate assemblies.

P/R port position

Symbol	Position	Applicable stations
U	U side	4 to 10
D	D side	
B	Both sides	4 to 12

SUP/EXH block assembly specification

Symbol	Specification
Nil	Standard/Internal pilot
R	External pilot
S	Internal pilot with built-in silencer
RS	External pilot with built-in silencer

Option

Symbol	Mounting
Nil	Direct mount
D	DIN rail mount (with DIN rail)
DO	DIN rail mount (without DIN rail)
D∗	When a DIN rail longer than the specified stations is necessary, indicate the number of required stations at the "∗" symbol.

A/B port size

Symbol	Specification
C8	ø8 One-touch fitting
C10	ø10 One-touch fitting
C12	ø12 One-touch fitting
M	Mixed

∗ For mixed specifications, order separately on a manifold specification sheet.

How to Order Manifold Assemblies (Example)

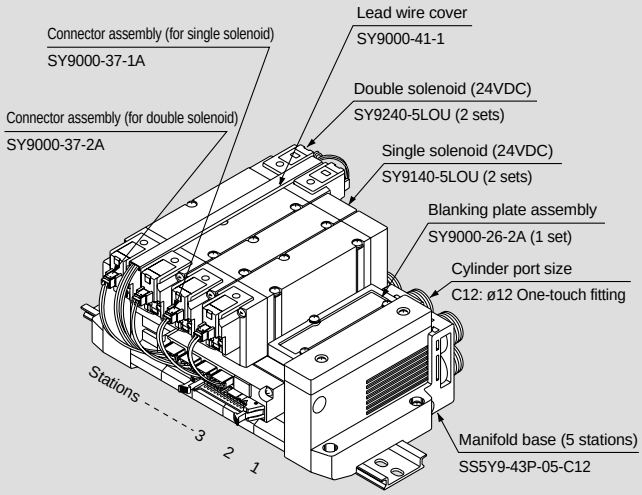

SS5Y9-43P-05B-C12 ..... 1 set (Type 43P, 5 station manifold base part no.)
∗ **SY9000-26-2A** …….. 1 set (Blanking plate assembly part no.)
∗ **SY9140-5LOU** …….. 2 sets (Single solenoid part no.)
∗ **SY9240-5LOU** ..... 2 sets (Double solenoid part no.)
∗ **SY9000-37-1A** ..... 2 sets (Connector assembly part no.)
∗ **SY9000-37-2A** ..... 2 sets (Connector assembly part no.)
∗ **SY9000-41-1** ..... 1 set (lead wire cover)

→ To order valves and options mounted onto the manifold at the factory, list the valve/option with an asterisk (∗) in front of each part number.

Add the valve and option part numbers in order starting from the first station as shown above. When entry of part numbers becomes complicated, indicate on a manifold specification sheet. (Manifold Specification Sheet on page 200)

How to Order Valves

For DC: **SY 9 1 40 □ – 5 LO Z □**

For AC: **SY 9 1 40 □ – 1 LOZ □**

Series

9	SY9000

Type of actuation

1	2 position single
2	2 position double
3	3 position closed center
4	3 position exhaust center
5	3 position pressure center

Pilot type

Nil	Internal pilot
R	External pilot

Rated voltage

5	24VDC
6	12VDC

Rated voltage

1	100VAC
3	110VAC (115VAC)

Manual override

Nil	Non-locking push type
D	Push-turn locking slotted type
E	Push-turn locking lever type

Indicator light/ Surge voltage suppressor

Z	With indicator light/ surge voltage suppressor
U	With indicator light/ surge voltage suppressor (non-polar type)

Note) For "Z", only positive COM specification is available.

Note) For flat ribbon cable type valves, "U" and "Z" are available for DC specifications, and only "Z" is available for AC specifications. However, with "Z" type for DC, only a positive common specification is available. Contact SMC for other combinations.

How to Order Connector Assemblies

For 12, 24VDC

Specification	SY9000
Single solenoid	SY9000-37-1A
Double solenoid/ 3 position	SY9000-37-2A
Single solenoid with spacer assembly	SY9000-37-3A
Double solenoid/3 position with spacer assembly	SY9000-37-4A

For 100VAC

Specification	SY9000
Single solenoid	SY9000-37-1B
Double solenoid/ 3 position	SY9000-37-2B
Single solenoid with spacer assembly	SY9000-37-3B
Double solenoid/3 position with spacer assembly	SY9000-37-4B

For 110VAC (115VAC)

Specification	SY9000
Single solenoid	SY9000-37-1C
Double solenoid/ 3 position	SY9000-37-2C
Single solenoid with spacer assembly	SY9000-37-3C
Double solenoid/3 position with spacer assembly	SY9000-37-4C

- **External wiring is bundled for one-touch wiring**
- **Clean appearance**

With the flat ribbon cable type, each valve is wired to the printed circuit board of the manifold base to allow the external wiring to be bundled with a 26 pin MIL connector for one-touch wiring.

Flat cable manifold specifications

Model		SS5Y9-43P
Applicable valve		SY9□40
Manifold type		Stacking type
P (SUP)/R (EXH) method		Common SUP/EXH
Valve stations		4 to 12 stations Note 1)
A, B port specifications	Location	Base
	Direction	Side
Port size	P, EA, EB port	C12 (ø12 One-touch fitting)
	A, B port	Rc 1/4 Rc 3/8 C8 (ø8 One-touch fitting) C10 (ø10 One-touch fitting) C12 (ø12 One-touch fitting)
Valve effective area Note 2) mm² (Cv factor)		C12: P to A/B 30.46 (1.69) A/B to EA/EB 32.98 (1.83)
Manifold base weight W (g) n: Number of stations		W = 114n + 343
Applicable flat ribbon cable connector		Flat ribbon cable connector, Socket: 26 pin MIL, With strain relief, MIL-C-83503 conformity
Internal wiring		Common positive and negative COM (Only positive COM for "Z" type)
Rated voltage		12, 24VDC/100, 110VAC

Note 1) For 10 stations or more, supply pressure to P port on both sides and exhaust from EA and EB ports on both sides.
Note 2) Value when manifold base (5 stations) is mounted, with single action 2 position type.
Note 3) The withstand voltage specification for the wiring unit is equivalent to JIS C0704, class 1.
Note 4) Refer to page 89 for manifold options.

Manifold internal wiring (non-polar type)

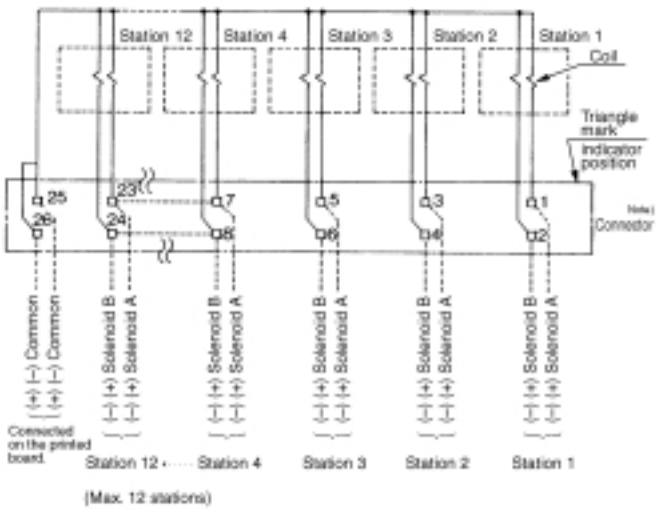

Note) Terminal numbers are not indicated on the connector. The terminal numbers indicated in the connector schematic shown above, show the correlation if the inserted connector's flat ribbon cable were numbered 1 to 26 from the triangle mark side, as shown in the figure to the right.

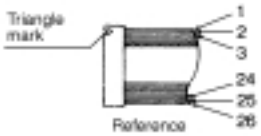

Note 1) For 10 stations or more, wire both of the common poles.
Note 2) For single solenoids, connect to the solenoid A side.
Note 3) The maximum number of stations is 12. Contact SMC if more than 12 stations are required.

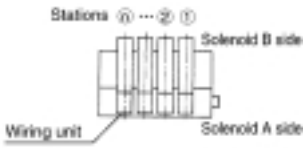

⚠Caution

Non-polar type (U) valves with DC electrical connection can be used for both negative and positive COM. However, always use the positive COM with the "Z" type, since valves will not be actuated when the negative COM is used.

SY9000: SS5Y9-43P-Stations D□-02, 03, C8, C10, C12-(D)

Note) [ ]: Values for AC

∗ When P/R ports are located on the D side, the designated P/R ports on the other side are plugged.

Scale: 25%

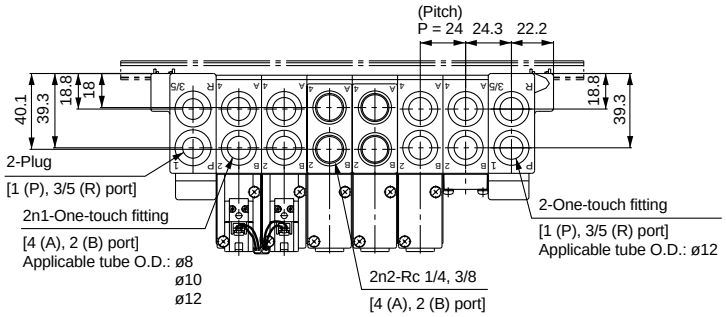

For external pilot specification

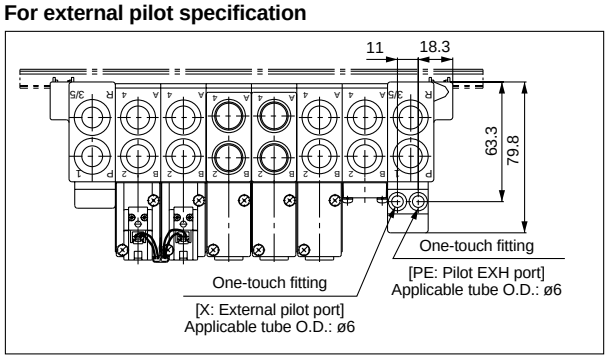

∗ The air outlet and external pilot locations for the built-in silencer type are on the D side.

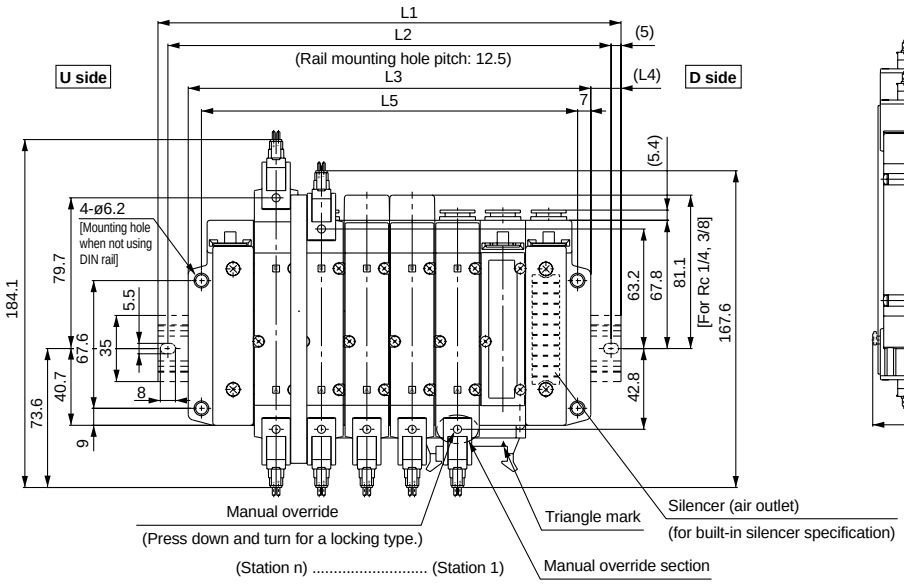

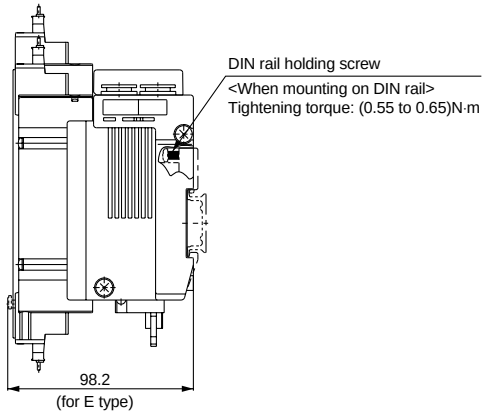

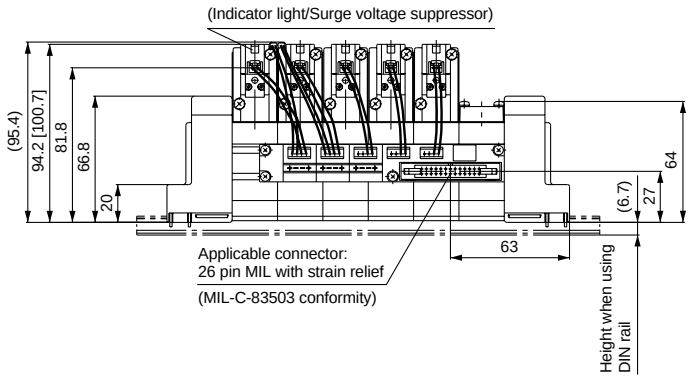

Stations n	4	5	6	7	8	9	10
L1	198	223	248	260.5	285.5	310.5	335.5
L2	187.5	212.5	237.5	250	275	300	325
L3	165	189	213	237	261	285	309
L4	16.5	17	17.5	12	12.5	13	13.5
L5	151	175	199	223	247	271	295

SY9000: SS5Y9-43P-Stations U□-02, 03, C8, C10, C12-(D)

Note) [ ]: Values for AC

∗ When P/R ports are located on the U side, the designated P/R ports on the other side are plugged.

Scale: 25%

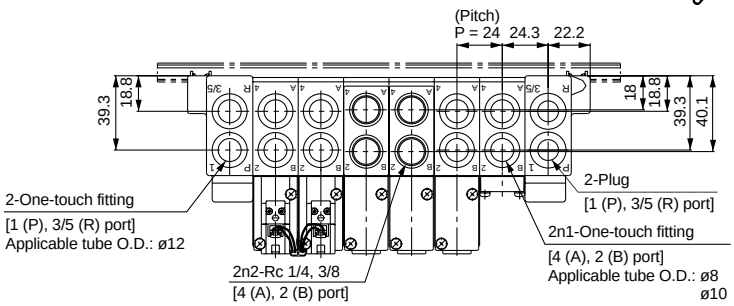

For external pilot specification

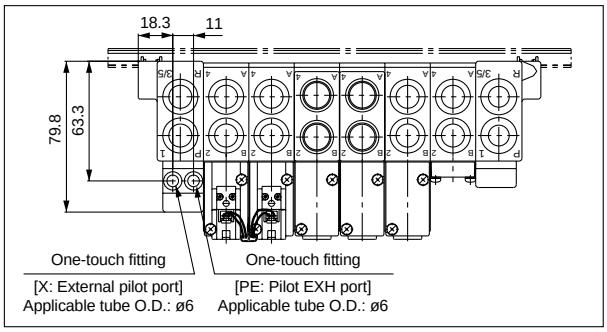

∗ The air outlet and external pilot locations for the built-in silencer type are on the U side.

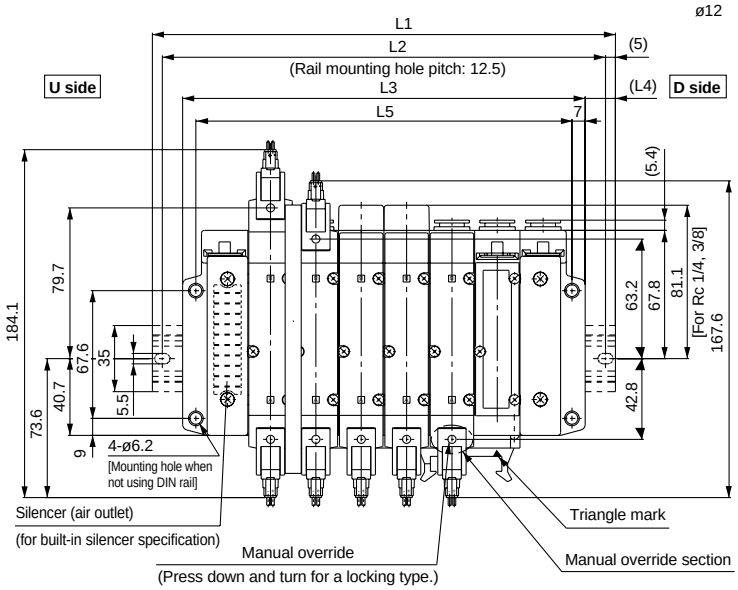

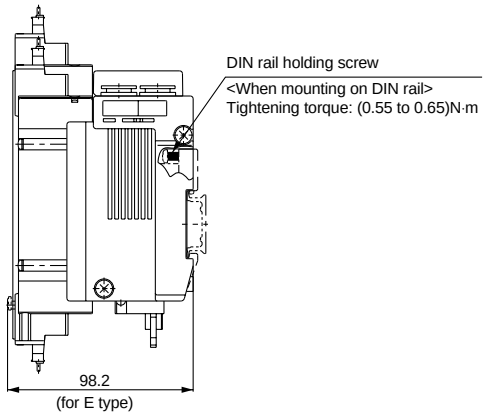

(Station n) ..... (Station 1)

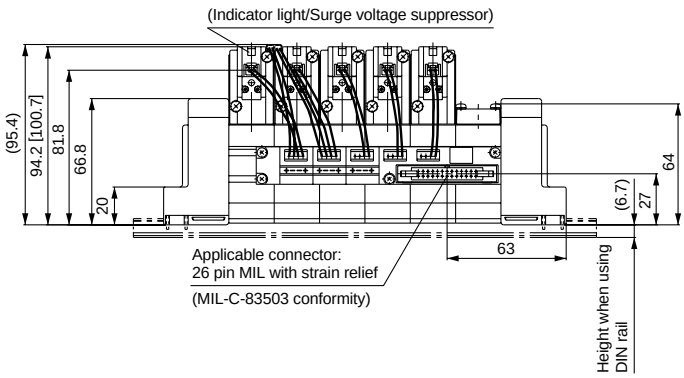

Stations n	4	5	6	7	8	9	10
L1	198	223	248	260.5	285.5	310.5	335.5
L2	187.5	212.5	237.5	250	275	300	325
L3	165	189	213	237	261	285	309
L4	16.5	17	17.5	12	12.5	13	13.5
L5	151	175	199	223	247	271	295

SY9000: SS5Y9-43P-Stations B□-02, 03, C8, C10, C12-(D)

Note) [ ]: Values for AC

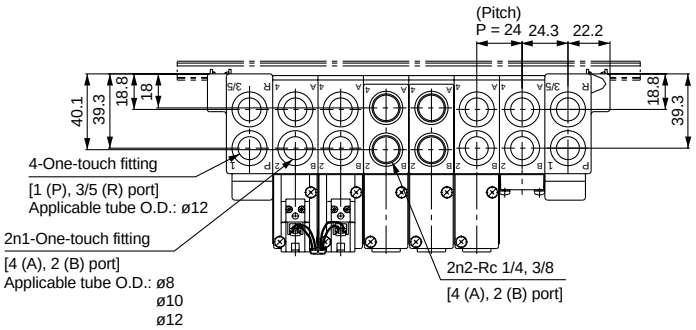

∗ When P/R ports are designated as B, P/R ports on both sides are open.

Scale: 25%

For external pilot specification

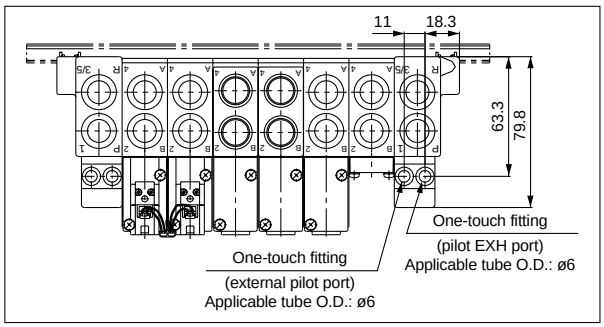

∗ The air outlet and external pilot locations for the built-in silencer type are on the B side (both sides) .

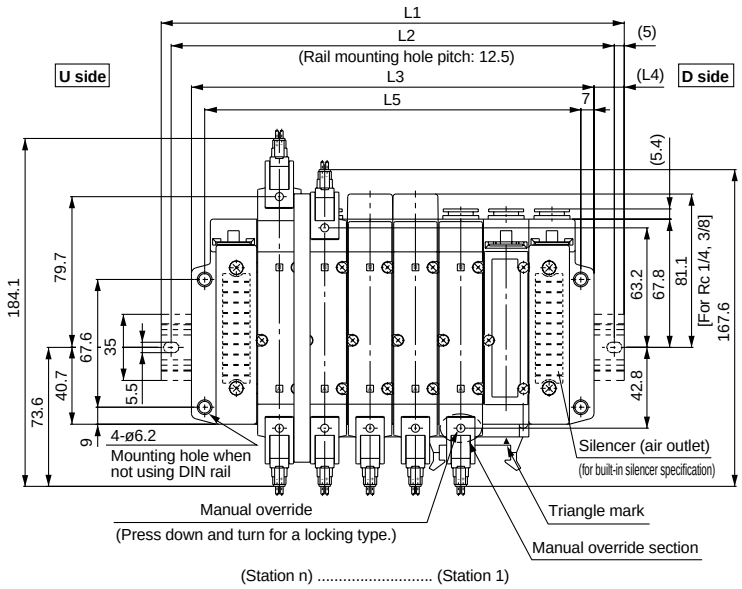

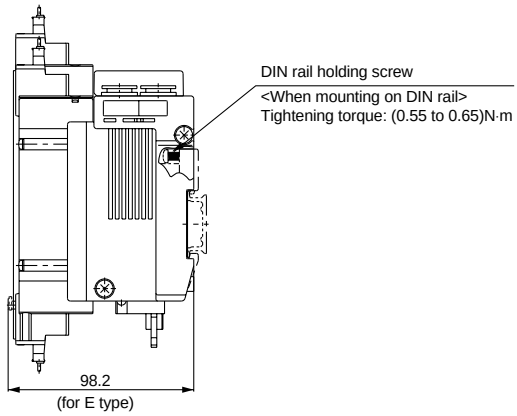

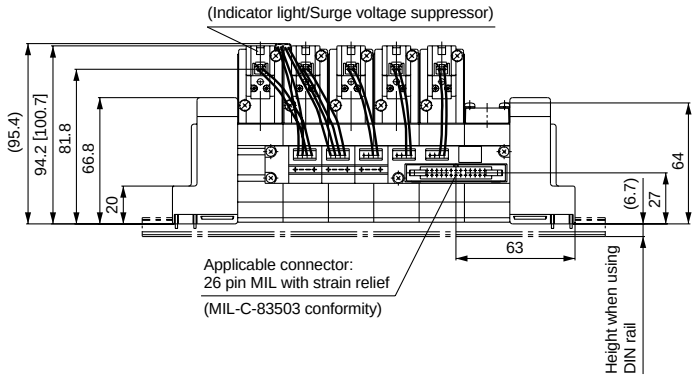

Staions n	4	5	6	7	8	9	10	11	12
L1	198	223	248	260.5	285.5	310.5	335.5	360.5	385.5
L2	187.5	212.5	237.5	250	275	300	325	350	375
L3	165	189	213	237	261	285	309	333	357
L4	16.5	17	17.5	12	12.5	13	13.5	14	14.5
L5	151	175	199	223	247	271	295	319	343

Manifold Options

■ For types 41, 42, 43 Blanking plate assembly

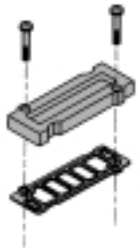

Series	Assembly part no.
SY3000	SY3000-26-9A
SY5000	SY5000-26-18A
SY7000	SY7000-26-20A
SY9000	SY9000-26-2A

■ For types 41P, 42P, 43P Blanking plate assembly

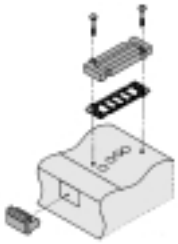

Series	Assembly part no.
SY3000	SY3000-26-10A
SY5000	SY5000-26-19A
SY7000	SY7000-26-21A
SY9000	SY9000-26-4A

■ Bolt & gasket part numbers

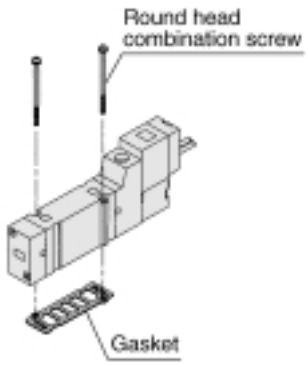

Series	Round head combination screw	Gasket
SY3000	SY3000-23-4 (M2 x 21)	SY3000-11-25
SY5000	M3 x 26 (Flat nickel plated)	SY5000-11-13
SY7000	M4 x 31 (Flat nickel plated)	SY7000-11-7
SY9000	SY9000-18-2 (M3 x 42)	SY9000-11-2

■ Individual EXH spacer assembly

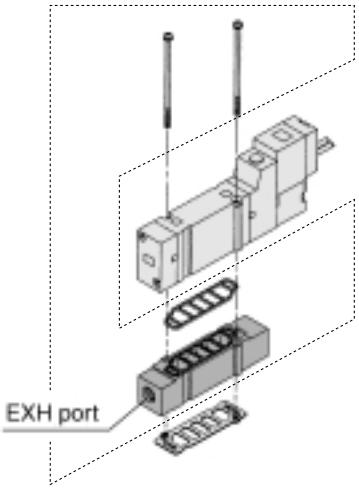

Series	Assembly part no.	Port size
SY3000	SY3000-39-2A	M5 x 0.8
SY5000	SY5000-39-2A	Rc 1/8
SY7000	SY7000-39-2A	Rc 1/4
SY9000	SY9000-39-2A	Rc 1/4

Note) In case of types 41P, 42P, and 43P, to protect from drainage, arrange the piping on the EA port (wiring unit side) so that the wiring unit will not be exposed to the direct exhaust from the valve.

■ Individual SUP spacer assembly

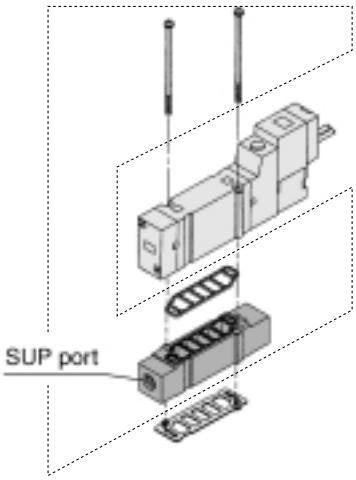

Series	Assembly part no.	Port size
SY3000	SY3000-38-2A	M5 x 0.8
SY5000	SY5000-38-2A	Rc 1/8
SY7000	SY7000-38-2A	Rc 1/4
SY9000	SY9000-38-2A	Rc 1/4

Note 1) The SUP port can be on the lead wire side or end plate side for SY3000/5000/7000. (The SUP port direction is as shown above when shipped already assembled.)

Note 2) For SY9000, the SUP port is only available on the end plate side.

⚠Caution

Mounting screw tightening torques

M2: 0.15N·m
M3: 0.6N·m
M4: 1.4N·m

■ Plug (white)

Insert into unused cylinder ports and SUP/EXH ports.
The minimum order quantity is 10 pieces. Order in multiples of 10.

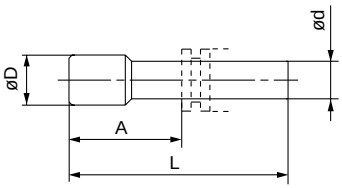

Dimensions

Applicable fitting size ød	Model	A	L	D
4	**KQ2P-04**	16	32	6
6	**KQ2P-06**	18	35	8
8	**KQ2P-08**	20.5	39	10
10	**KQ2P-10**	22	43	12
12	**KQ2P-12**	24	45.5	14

Manifold Options

■ SUP block disc (SY9000)

By installing a SUP block disc in the pressure supply passage of the manifold base, two or more different pressures, high or low, can be supplied to one manifold.

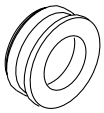

Series	Part no.
SY9000	SY9000-57-1A

■ EXH block disc (SY9000)

By installing an EXH block disc in the exhaust passage of the manifold base, the passage can be divided so that the exhaust from one valve will not affect another valve. (Two block discs are required to block both EXH ports.)

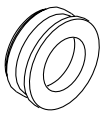

Series	Part no.
SY9000	SY9000-57-1A

■ Labels for block disc (SY9000)

Labels are applied to blocks with SUP and EXH block discs for external confirmation of blocked passages. (3 labels per package)

VZ3000-123-1A

SUP block disc label | EXH block disc label | SUP/EXH block disc label

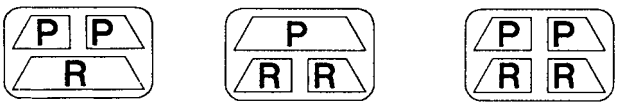

Note) When block discs are ordered with manifolds using a manifold specification sheet, block disc labels are already applied if the block discs are installed at the time of shipment.

■ Silencer with One-touch fitting (SY9000)

Can be attached with one touch to the R (EXH) port of the manifold.

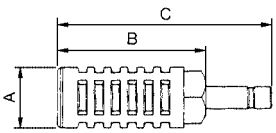

Series	Model	Effective area	A	B	C
For SY9000 (ø12)	AN300-KM12	41mm²	ø25	70	98

■ SY9000 DIN rail dimensions and weights

VZ1000－11－4－□

● **Refer to the table below for dimension L.**

∗ Specify a number inside □ from the DIN rail dimension table below.

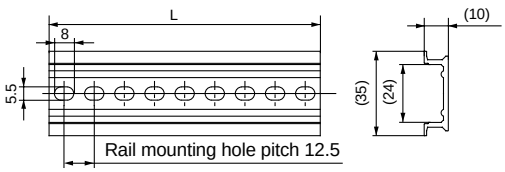

No.	0	1	2	3	4	5	6	7	8	9
Dimension L	98	110.5	123	135.5	148	160.5	173	185.5	198	210.5
Weight (g)	24.8	28	31.1	34.3	37.4	40.6	43.8	46.9	50.1	53.3

No.	10	11	12	13	14	15	16	17	18	19
Dimension L	223	235.5	248	260.5	273	285.5	298	310.5	323	335.5
Weight (g)	56.4	59.6	62.7	65.9	69.1	72.2	75.4	78.6	81.7	84.9

No.	20	21	22	23	24	25	26	27	28	29
Dimension L	348	360.5	373	385.5	398	410.5	423	435.5	448	460.5
Weight (g)	88	91.2	94.4	97.5	100.7	103.9	107	110.2	113.3	116.5

Note) Refer to page 236 regarding DIN rails. Refer to dimension L1 on pages 86 through 88 for lengths that correspond to the number of manifold stations.

■ Cable assembly

AXT100-FC26-1 2 3

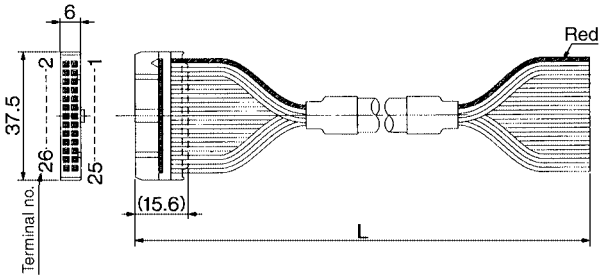

Flat ribbon cable connector assembly

Cable length (L)	Assembly part no.	Note
1.5m	AXT100-FC26-1	26 core cable x 28AWG
3m	AXT100-FC26-2	
5m	AXT100-FC26-3	

∗ For other commercial connectors, use a 26 pin type with strain relief conforming to MIL-C-83503.

Connector manufacturer examples

- **Hirose Electric Company**
- **Japan Aviation Electronics Industry, Ltd.**
- **Sumitomo/3-M Limited**
- **J.S.T. Mfg. Co., Ltd.**
- **Fujitsu, Ltd.**

Manifold Options

■ **How to order interface regulators (SY3000/5000 only)**

Series SY3000

ARBY3000 — 05 — P — 2

Regulated port

P	P port
A1	A port (P port control type A port regulated)
B1	B port (P port control type B port regulated)

Pressure gauge connection port

05	Pressure gauge (G15-10-01) [for odd number stations]
06	Pressure gauge (G15-10-01) [for even number stations]
M1	Plug (M-5P)

Note) Note that for series ARBY3000 with pressure gauge, part numbers differ for odd number and even number stations to prevent interference between the pressure gauges when mounted on the manifold.

Series SY5000

ARBY5000 — 00 — P — 2

Regulated port

P	P port
A1	A port (P port control type A port regulated)
B1	B port (P port control type B port regulated)

Pressure gauge connection port

00	Pressure gauge (G15-10-01)
M1	Plug (M-5P)

ARBY3000-05-□-2
(for mounting on odd number stations)

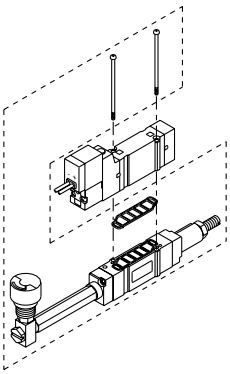

ARBY3000-06-□-2
(for mounting on even number stations)

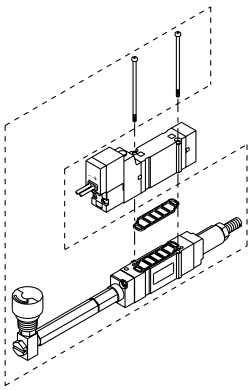

ARBY3000-M1-□-2

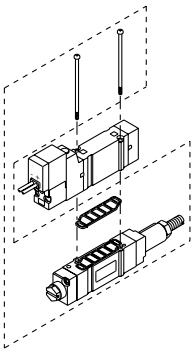

ARBY5000-00-□-2

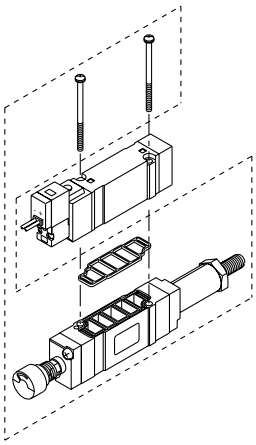

ARBY5000-M1-□-2

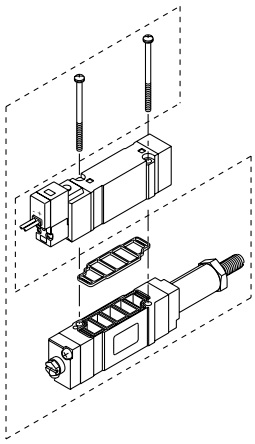

Accessories

Series	Round head combination screw	Gasket
ARBY3000	SY3000-23-10 (M2 x 36)	SX3000-57-4
ARBY5000	M3 x 48.5 (Flat nickel plated)	SX5000-57-5

⚠ Caution

Mounting screw tightening torques

M2: 0.15N·m
M3: 0.6N·m

Exploded View of Base Mounted Type Manifold

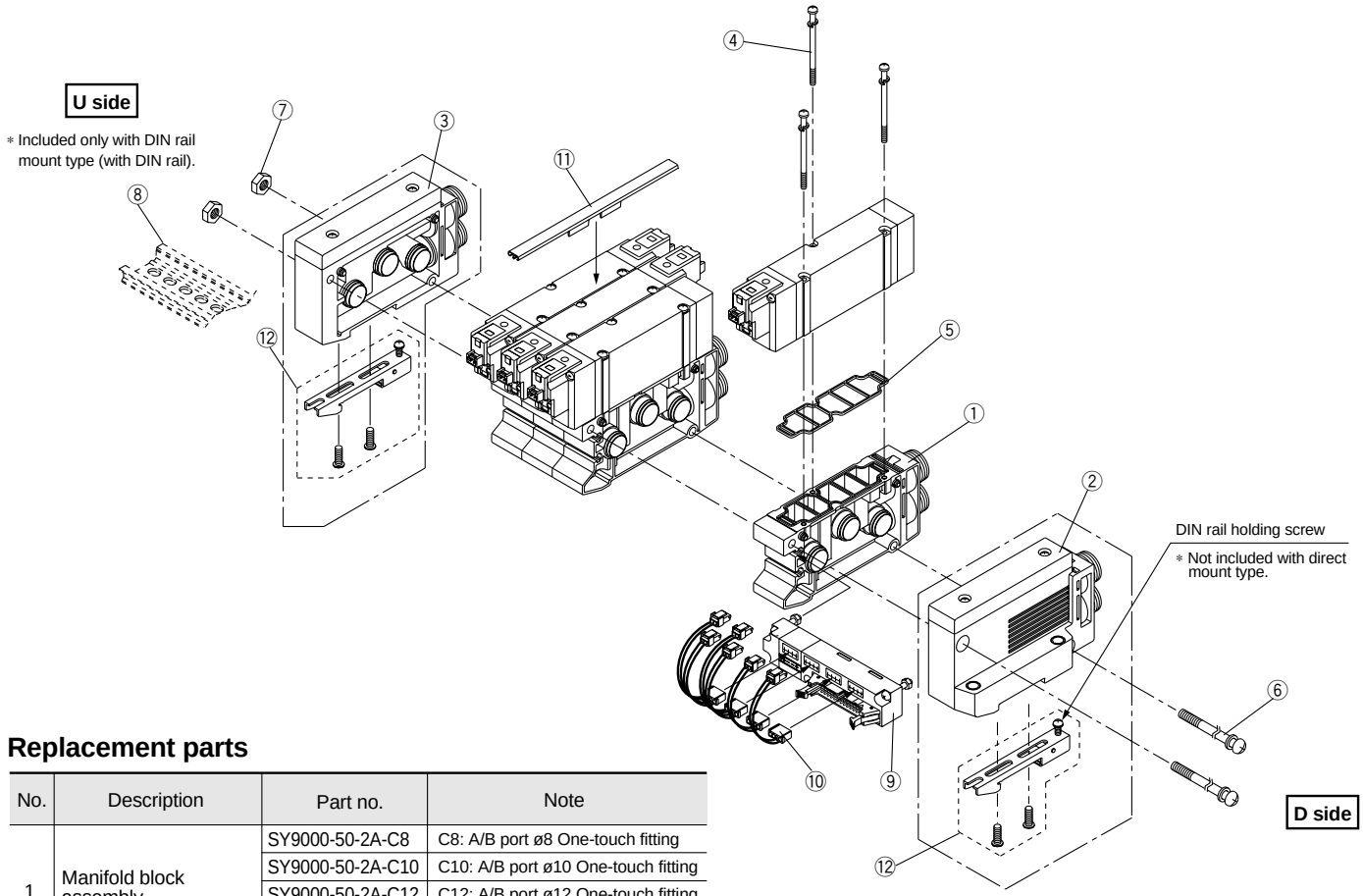

Replacement parts

No.	Description	Part no.	Note
1	Manifold block assembly	SY9000-50-2A-C8	C8: A/B port ø8 One-touch fitting
		SY9000-50-2A-C10	C10: A/B port ø10 One-touch fitting
		SY9000-50-2A-C12	C12: A/B port ø12 One-touch fitting
		SY9000-50-2A-02	02: A/B port Rc 1/4
		SY9000-50-2A-03	03: A/B port Rc 3/8
4	Round head combination screw	SY9000-18-2	M3 x 42 (Flat nickel plated)
5	Gasket	SY9000-11-2	
6	Tension bolt	SY9000-23-□	Specify the number of stations inside □ in the part number.
7	Hexagon nut	SY9000-25-1	
8	DIN rail	VZ1000-11-4-□	Refer to page 90.
9	Wiring unit assembly	SY9000-36-□A	Specify the number of stations (4 to 12) inside □ in the part number.
10	Connector assembly	SY9000-37-□□	Refer to page 84.
11	Lead wire cover	SY9000-41-1	
12	Clamp bracket sub-assembly	SY9000-30-1A	Included with the DIN rail mount type.

How to install lead wire cover

Lead wire cover is only used for double solenoid valves. As shown in the expanded view below, insert lead wires inside the lead wire cover and push until the cover is tightly in contact with the valve body.

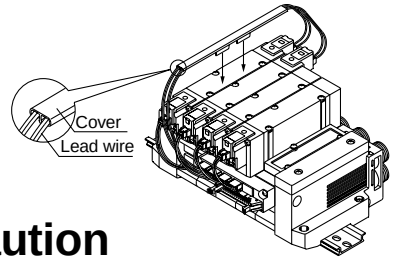

⚠Caution

For 43P type (flat ribbon cable manifold) of series SY9000, lead wire cover to bundle lead wire of each solenoid is available.
When double solenoid valves are added, order lead wire covers separately.

SUP/EXH Block Assembly ② Part Nos. (D Side Mount Type)

Direct mount type: **SY9000-70-□A-□**

DIN rail mount type: **SY9000-72-□A-□**

P/R port

C12	ø12 One-touch fitting
00	Plug

Specification

1	Internal pilot type
3	External pilot type
4	Internal pilot with built-in silencer type
5	External pilot with built-in silencer type

SUP/EXH Block Assembly ③ Part Nos. (U Side Mount Type)

Direct mount type: **SY9000-71-□A-□**

DIN rail mount type: **SY9000-73-□A-□**

P/R port

C12	ø12 One-touch fitting
00	Plug

Specification

1	Internal pilot type
3	External pilot type
4	Internal pilot with built-in silencer type
5	External pilot with built-in silencer type

Manifold Base Expansion (for SY9000 Only) Stations can be added in a desired location.

For type 43 manifold base expansion, tension bolts are required as well as a manifold block assembly. Tension bolts vary in length depending on the number of stations; therefore, order the appropriate tension bolts for the expanded (or reduced) manifold base. (Changes in the number of stations for type 43P manifolds require wiring units and lead wire assemblies for any additional stations.)

1. Loosen the two tension bolts ⑥ that connect the manifold base and remove them.

   (In case of a DIN rail type, also loosen the DIN rail holding screw on either the U side or D side.)
2. Separate the blocks at the location where a new station is to be added.
3. Mount the manifold block assembly to be added.
4. Hold the blocks so that there is no space between them, insert the appropriate tension bolts into the expanded manifold base and tighten them.

⚠Caution (Tightening torque: 2.9N·m)
(With the DIN rail type, be sure to tighten the tension bolts first, and then tighten the DIN rail holding screws. Tightening torque: 1.4N·m)

⚠Caution

1. Be sure to turn off the power supply and air supply before disassembling. Furthermore, confirm that the air is completely exhausted before beginning disassembly, since residual air may be present inside the actuator, piping, and manifold.
2. When disassembly and assembly are performed, insufficient tightening of the tension bolts will cause air leakage.
3. A type 43 manifold can be changed into a type 43P manifold by adding a wiring unit assembly.

Replacement of A/B Port Fitting Assembly

By replacing manifold block fitting assemblies or the threaded port block assembly of a type 43(P) manifold, the port size of the A and B ports can be changed. To replace these parts, remove the clip with a flat head screw driver after the valve has been removed. Insert the fitting assemblies or threaded port block assembly, and then reinsert the clip so that it does not protrude from the manifold block.

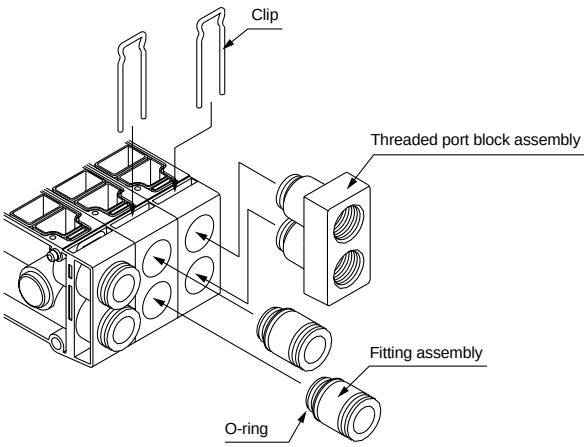

Fitting assembly part nos.

Connection port size	Part no.
ø8 One-touch fitting assembly	VVQ4000-50B-C8
ø10 One-touch fitting assembly	VVQ4000-50B-C10
ø12 One-touch fitting assembly	VVQ4000-50B-C12
Rc 1/4 Threaded port block assembly	SY9000-58A-02
Rc 3/8 Threaded port block assembly	SY9000-58A-03
Plug assembly	SY9000-62-1A

Note 1) Do not scratch or put foreign matter on the O-ring, as this will cause air leakage.

Note 2) One-touch fittings for P/R ports can be replaced also. However, if a fitting smaller than the standard size (ø12) is used, air supply and exhaust may be insufficient when there is frequent simultaneous operation of solenoid valves. Also, the fittings used are the same as those used for the A/B ports, however, threaded port block assemblies cannot be used.

Type 45

SY3000/5000
Base Mounted Type Manifold Stacking Type/DIN Rail Mount
Individual Wiring

CAD

How to Order Manifolds

SS5Y 3 – 45 – 05 U – C6 –

Manifold series

3	SY3000
5	SY5000

Stations

02	2 stations
⋮	⋮
20	20 stations

SUP/EXH block assembly mounting position

Symbol	Mounting position	Applicable stations
U	U side	2 to 10
D	D side	
B	Both sides	2 to 20
M*	Special specifications	

∗ For special specifications, order separately on a manifold specification sheet.

A/B port size

SY3000

Symbol	Port size
C4	ø4 One-touch fitting
C6	ø6 One-touch fitting
M*	Mixed

SY5000

Symbol	Port size
C4	ø4 One-touch fitting
C6	ø6 One-touch fitting
C8	ø8 One-touch fitting
M*	Mixed

∗ For mixed specifications, order separately on a manifold specification sheet.

Option

When a DIN rail longer than the specified stations is necessary, indicate the number of required stations. (Max. 20 stations)

Refer to pages starting with 183 regarding external pilot specifications and built-in silencer.

How to Order Manifold Assemblies (Example)

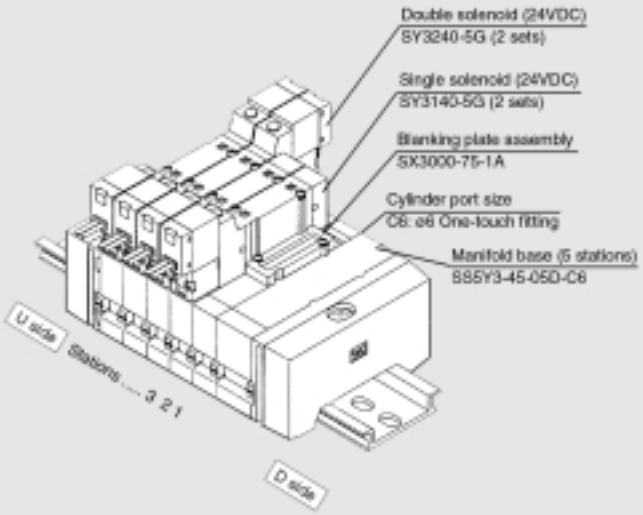

SS5Y3-45-05D-C6 ..... 1 set (Type 45, 5 station manifold base part no.)
∗ SX3000-75-1A .....1 set (Blanking plate assembly part no.)
∗ SY3140-5G ..... 2 sets (Single solenoid part no.)
∗ SY3240-5G ..... 2 sets (Double solenoid part no.)

→ To order valves and options mounted onto the manifold at the factory, list the valve/option with an asterisk (∗) in front of each part number.

Valves are assembled from the D side regardless of the location of the SUP/EXH block assembly. Add the valve and option part numbers in order starting from the first station on the D side. When entry of part numbers becomes complicated, indicate on a manifold specification sheet. (Manifold Specification Sheet on pages 201 and 202)

How to Order Valves

SY 5 2 40 — 5 L □ □

Series

3	SY3000
5	SY5000

Type of actuation

1	2 position single
2	2 position double
3	3 position closed center
4	3 position exhaust center
5	3 position pressure center

Rated voltage

DC specifications

5	24VDC
6	12VDC
V	6VDC
S	5VDC
R	3VDC

AC specifications (50/60Hz)

1	100VAC
2	200VAC
3	110V [115VAC]
4	220V [230AC]

Note 1) DC specifications for "D" and "DO" are only available in 24VDC and 12VDC.
Note 2) "D" and "DO" are available for SY5000 only.

Manual override

Nil	Non-locking push type
D	Push-turn locking slotted type
E	Push-turn locking lever type

Indicator light/Surge voltage suppressor

Electrical entry G, H, L, M

Nil	Without indicator light/surge voltage suppressor
S	With surge voltage suppressor
Z	With indicator light/surge voltage suppressor
R	With surge voltage suppressor (non-polar type)
U	With indicator light/surge voltage suppressor (non-polar type)

Note 1) For AC, there is no "S" specification, since it is integrated with the rectifier.
Note 2) "R" and "U" are available for DC only.

Electrical entry D

Nil	Without indicator light/surge voltage suppressor
S	With surge voltage suppressor (non-polar type)
Z	With indicator light/surge voltage suppressor (non-polar type)

Note 1) "DOZ" is not available.
Note 2) For AC, there is no "S" specification, since it is integrated with the rectifier.

Electrical entry

24V, 12V, 6V, 5V, 3VDC/100V, 110V, 200V, 220VAC			24V, 12VDC 100V, 110V, 200V, 220VAC
Grommet	**L type plug connector**	**M type plug connector**	**DIN terminal**
G: Lead wire length 300mm **H:** Lead wire length 600mm	**L:** With lead wire (length 300mm) **LN:** Without lead wire **LO:** Without connector	**M:** With lead wire (length 300mm) **MN:** Without lead wire **MO:** Without connector	**(SY5000 only)** **D:** With connector **DO:** Without connector

Note 1) "LN" and "MN" include 2 sockets.
Note 2) "D" and "DO" are available for SY5000 only.
Note 3) Refer to page 189 regarding DIN4365C standard DIN terminal "Y". Refer to page 189 for details.

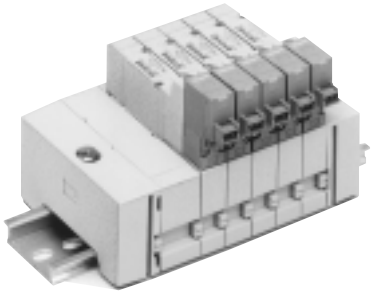

Manifold specifications

Model		SS5Y3-45	SS5Y5-45
Applicable valve		SY3□40	SY5□40
Manifold type		Stacking type/DIN rail	
P (SUP)/R (EXH) method		Common SUP/EXH	
Valve stations		2 to 20 stations Note 1)	
A, B port specifications	Location	Base	
	Direction	Side	
Port size	P, R port	C8 (ø8 One-touch fitting)	C10 (ø10 One-touch fitting)
	A, B port	C4 (ø4 One-touch fitting) C6 (ø6 One-touch fitting)	C4 (ø4 One-touch fitting) C6 (ø6 One-touch fitting) C8 (ø8 One-touch fitting)
Valve effective area Note 2) mm² (Cv factor)		C6: P to A/B 4.68 (0.26) A/B to R 4.68 (0.26)	C8: P to A/B 12.6 (0.7) A/B to R 12.6 (0.7)
Manifold base weight W (g) n: Number of stations		For 2 to 10 stations: W = 22n + 118 For 11 to 20 stations: W = 22n + 140	For 2 to 10 stations: W = 47n + 156 For 11 to 20 stations: W = 47n + 190

Note 1) For 11 stations or more, supply pressure to P port on both sides and exhaust from R port on both sides.

Note 2) Value when manifold base (5 stations) is mounted, with single action 2 position type.

Manifold Options

■ Individual SUP spacer assembly

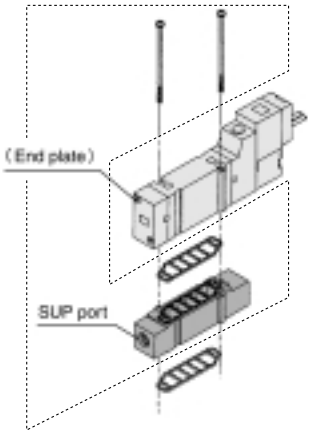

Series	Assembly part no.	Port size
SY3000	SY3000-38-2A	M5 x 0.8
SY5000	SY5000-38-2A	Rc 1/8

Note) The SUP port can be on the lead wire side or end plate side. (It is as shown above when shipped already assembled.)

■ Individual EXH spacer assembly

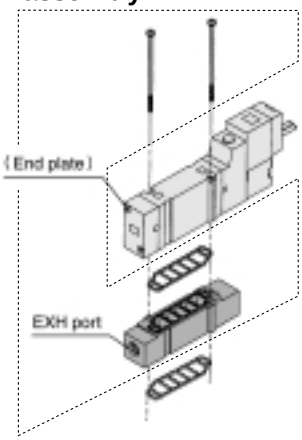

Series	Assembly part no.	Port size
SY3000	SY3000-39-2A	M5 x 0.8
SY5000	SY5000-39-2A	Rc 1/8

Note) The EXH port can be on the lead wire side or end plate side. (It is as shown above when shipped already assembled.)

■ Blanking plate assembly

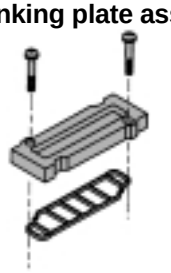

Series	Assembly part no.
SY3000	SX3000-75-1A
SY5000	SX5000-76-1A

⚠Caution

Mounting screw tightening torques

M2: 0.15N·m
M3: 0.6N·m
M4: 1.4N·m

■ DIN rail dimensions

VZ1000－11－1－□

● Refer to the table below for dimension L.

∗ Specify a number inside □ from the DIN rail dimension table

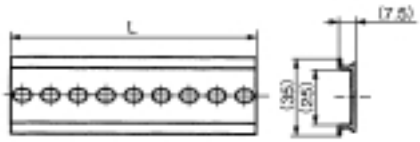

No.	0	1	2	3	4	5	6	7	8	9	10
Dimension L	98	110.5	123	135.5	148	160.5	173	185.5	198	210.5	223
No.	11	12	13	14	15	16	17	18	19	20	21
Dimension L	235.5	248	260.5	273	285.5	298	310.5	323	335.5	348	360.5
No.	22	23	24	25	26	27	28	29	30	31	32
Dimension L	373	385.5	398	410.5	423	435.5	448	460.5	473	485.5	498
No.	33	34	35	36	37	38	39	40	41	42	43
Dimension L	510.5	523	535.5	548	560.5	573	585.5	598	610.5	623	635.5
No.	44	45	46	47	48	49	50	51	52	53	54
Dimension L	648	660.5	673	685.5	698	710.5	723	735.5	748	760.5	773
No.	55	56	57	58	59	60	61	62	63	64	65
Dimension L	785.5	798	810.5	823	835.5	848	860.5	873	885.5	898	910.5
No.	66	67	68	69	70	71					
Dimension L	923	935.5	948	960.5	973	985.5					

Note) Refer to dimension L1 on pages starting with 101 for lengths that correspond to the number of manifold stations.

■ SUP block disc

By installing a SUP block disc in the pressure supply passage of the manifold base, two or more different pressures, high or low, can be supplied to one manifold.

Series	Part no.
SY3000	SX3000-77-1A
SY5000	SX5000-77-1A

■ EXH block disc

By installing an EXH block disc in the exhaust passage of the manifold base, the passage can be divided so that the exhaust from one valve will not affect other valves. (Two block discs are required to block both EXH ports.)

Series	Part no.
SY3000	SX3000-77-1A
SY5000	SX5000-77-1A

■ Labels for block disc

Labels are applied to blocks with SUP and EXH block discs for external confirmation of blocked passages. (3 labels per package)

VZ3000-123-1A

SUP block disc label

EXH block disc label

SUP/EXH block disc label

∗ When block discs are ordered with manifolds using a manifold specification sheet, block disc labels are already applied where block discs are installed at the time of shipment.

■ Silencer with One-touch fitting

Can be attached with one touch to the R (EXH) port of the manifold.

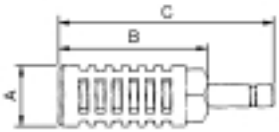

Series	Model	Effective area	A	B	C
SY3000 (ø8)	AN203-KM8	14mm²	ø16	26	51
SY5000 (ø10)	AN200-KM10	26mm²	ø22	53.8	80.8
	AN300-KM10	30mm²	ø25	70	97

■ Plug (white)

Insert into unused cylinder ports and SUP/EXH ports.
The minimum order quantity is 10 pieces. Order in multiples of 10.

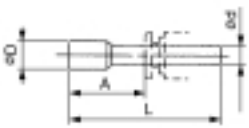

Dimensions

Applicable fitting size ød	Model	A	L	D
4	**KQ2P-04**	16	32	6
6	**KQ2P-06**	18	35	8
8	**KQ2P-08**	20.5	39	10
10	**KQ2P-10**	22	43	12

Manifold Options

■ How to order interface regulators (SY3000/5000 only)

Series SY3000

ARBY3000 — 05 — P — 2

Regulated port

P	P port
A1	A port (P port control type A port regulated)
B1	B port (P port control type B port regulated)

Pressure gauge connection port

05	Pressure gauge (G15-10-01) [for odd number stations]
06	Pressure gauge (G15-10-01) [for even number stations]
M1	Plug (M-5P)

Note) Note that for series ARBY3000 with pressure gauge, part numbers differ for odd number and even number stations to prevent interference between the pressure gauges when mounted on the manifold.

Series SY5000

ARBY5000 — 00 — P — 2

Regulated port

P	P port
A1	A port (P port control type A port regulated)
B1	B port (P port control type B port regulated)

Pressure gauge connection port

00	Pressure gauge (G15-10-01)
M1	Plug (M-5P)

ARBY3000-05-□-2
(for mounting on odd number stations)

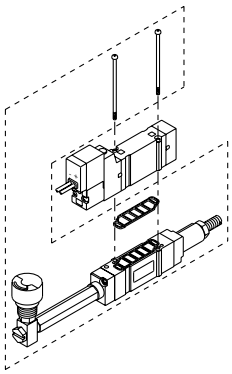

ARBY3000-06-□-2
(for mounting on even number stations)

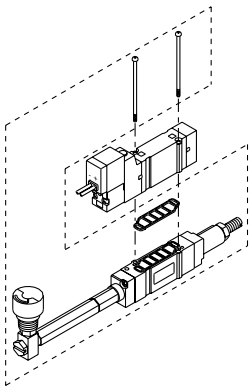

ARBY3000-M1-□-2

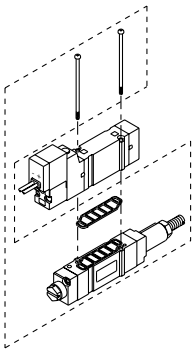

ARBY5000-00-□-2

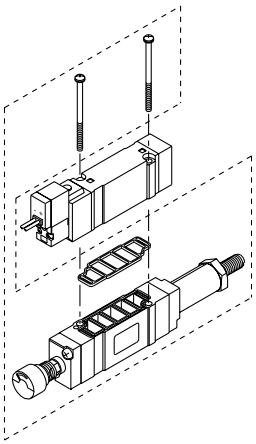

ARBY5000-M1-□-2

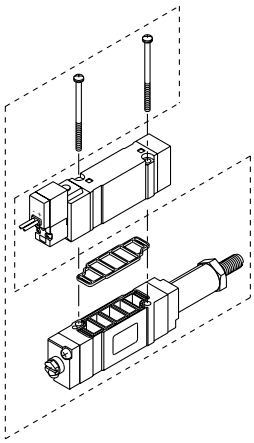

Accessories

Series	Round head combination screw	Gasket
ARBY3000	SY3000-23-10 (M2 x 36)	SX3000-57-4
ARBY5000	M3 x 48.5 (Flat nickel plated)	SX5000-57-5

⚠ Caution

Mounting screw tightening torques

M2: 0.15N·m
M3: 0.6N·m

Series SY3000 Dimensions

Note) [ ]: Values for AC
< >: Values with surge voltage suppressor

SS5Y3-45-Stations D-C4/C6

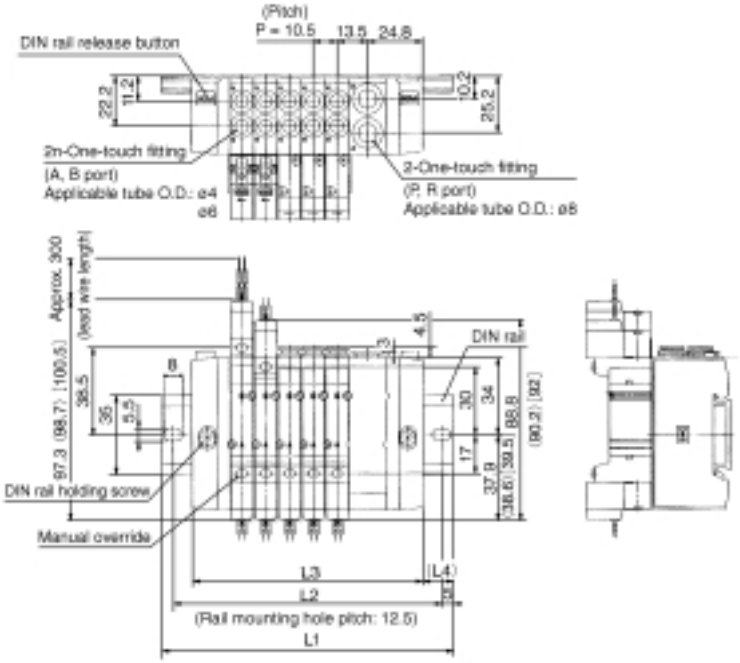

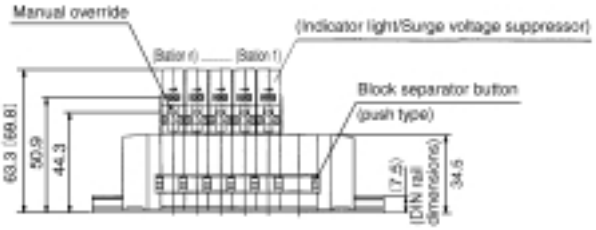

SS5Y3-45-Stations U-C4/C6

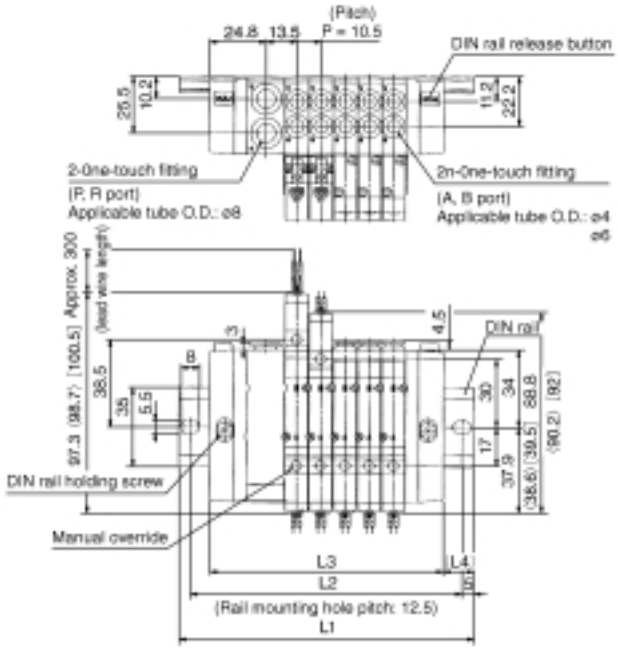

Stations n	2	3	4	5	6	7	8	9	10
L1	98	110.5	123	135.5	148	148	160.5	173	185.5
L2	87.5	100	112.5	125	137.5	137.5	150	162.5	175
L3	70.5	81	91.5	102	112.5	123	133.5	144	154.5
L4	13.5	14.5	15.5	16.5	17.5	12.5	13.5	14.5	15.5

With interface regulator (with gauge)

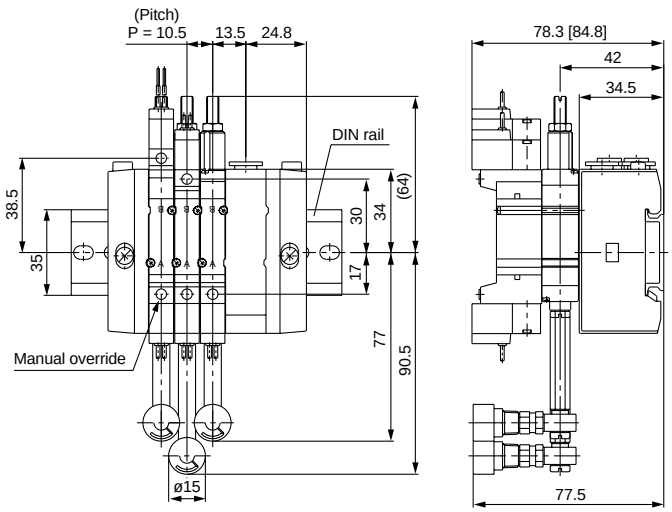

SS5Y3-45-□D ..... SS5Y33, #1 (#1 + #7 + #8 + #9)

Note) [ ]: Values for AC
< >: Values with surge voltage suppressor

SS5Y3-45-Stations B-C4/C6

Scale: 30%

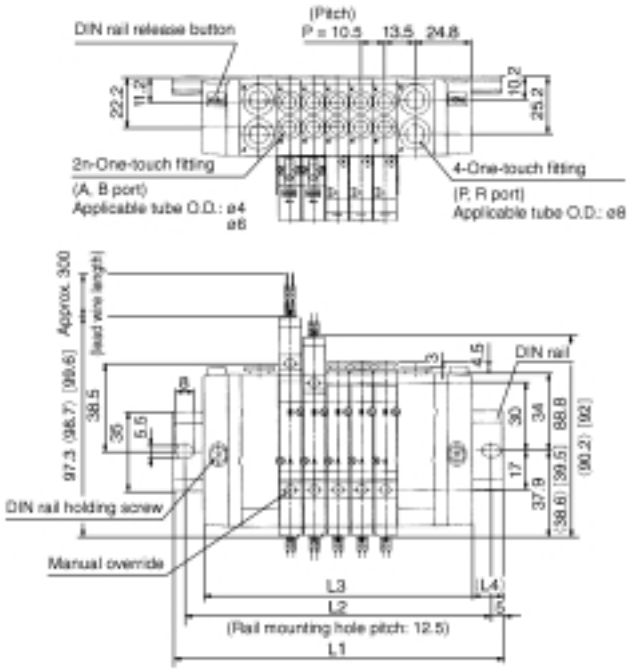

L type plug connector

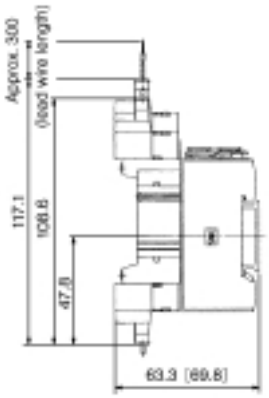

M type plug connector

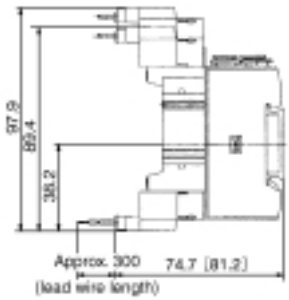

Stations n	2	3	4	5	6	7	8	9	10
L1	110.5	123	135.5	148	160.5	173	185.5	185.5	198
L2	100	112.5	125	137.5	150	162.5	175	175	187.5
L3	87	97.5	108	118.5	129	139.5	150	160.5	171
L4	11.5	12.5	13.5	14.5	15.5	16.5	17.5	12.5	13.5

Stations n	11	12	13	14	15	16	17	18	19	20
L1	210.5	223	235.5	248	248	260.5	273	285.5	298	310.5
L2	200	212.5	225	237.5	237.5	250	262.5	275	287.5	300
L3	181.5	192	202.5	213	223.5	234	244.5	255	265.5	276
L4	14.5	15.5	16.5	17.5	12	13	14	15	16	17

CAD SS5Y3-45-□B ..... SS5Y33, #2 (#2 + #8 + #9 + #10)

Series SY5000 Dimensions

Note) [ ]: Values for AC
< >: Values with surge voltage suppressor

SS5Y5-45-Stations D-C4/C6/C8

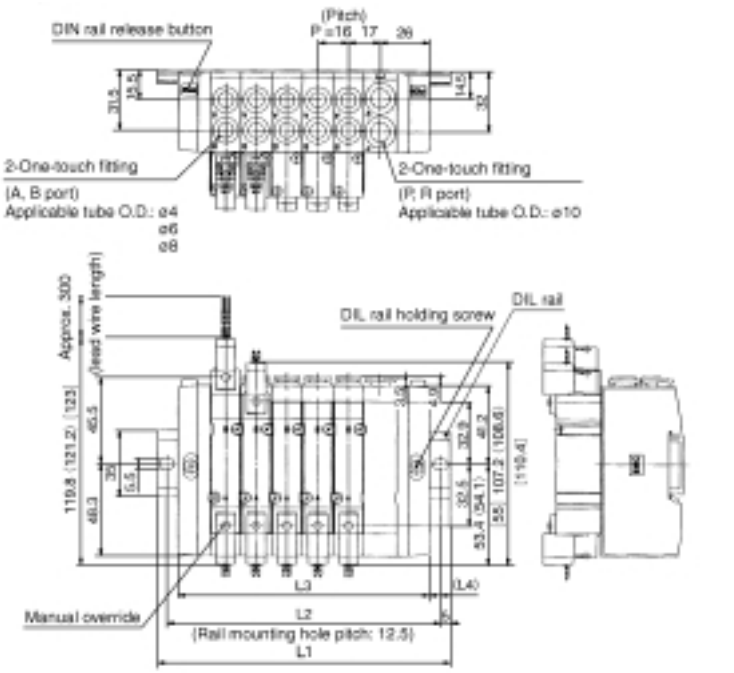

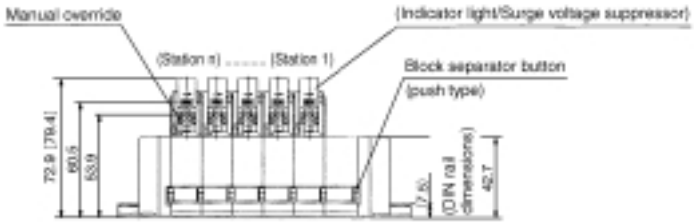

SS5Y5-45-Stations U-C4/C6/C8

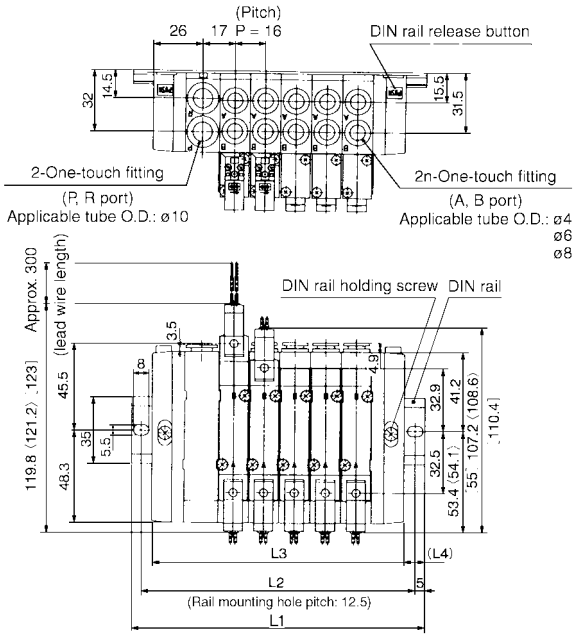

Stations n	2	3	4	5	6	7	8	9	10
L1	110.5	135.5	148	160.5	173	198	210.5	223	235.5
L2	100	125	137.5	150	162.5	187.5	200	212.5	225
L3	84	100	116	132	148	164	180	196	212
L4	13	17.5	16	14	12.5	17	15	13.5	11.5

With interface regulator (with gauge)

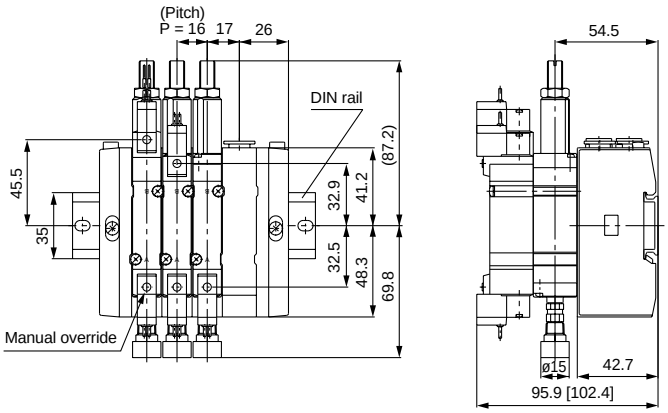

SS5Y5-45-□D ..... SS5Y53, #1 (#1 + #8 + #9 + #10 + #11)

Note) [ ]: Values for AC
< >: Values with surge voltage suppressor

SS5Y5-45-Stations B-C4/C6/C8

Scale: 25%

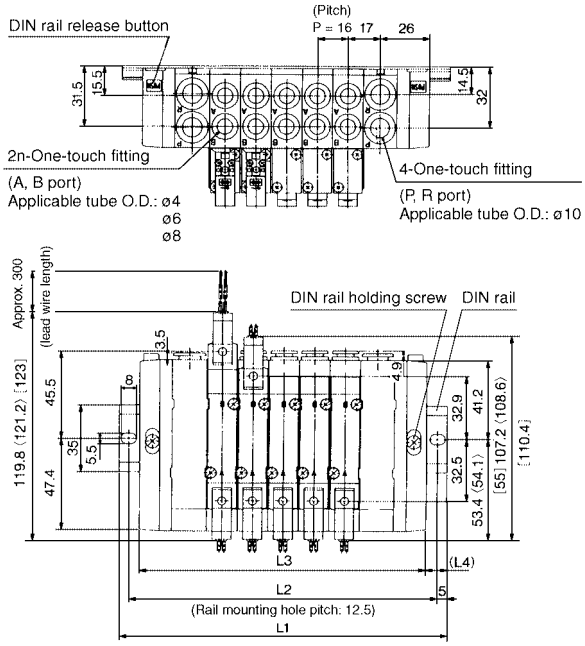

Stations n	2	3	4	5	6	7	8	9	10
L1	135.5	148	160.5	185.5	198	210.5	223	248	260.5
L2	125	137.5	150	175	187.5	200	212.5	237.5	250
L3	102	118	134	150	166	182	198	214	230
L4	16.5	15	13	17.5	16	14	12.5	17	15

Stations n	11	12	13	14	15	16	17	18	19	20
L1	273	285.5	310.5	323	335.5	360.5	373	385.5	398	423
L2	262.5	275	300	312.5	325	350	362.5	375	387.5	412.5
L3	246	262	278	294	310	326	342	358	374	390
L4	13.5	11.5	16	14.5	12.5	17	15.5	13.5	12	16.5

L type plug connector

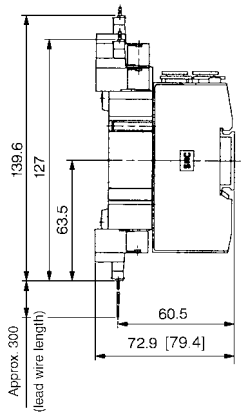

M type plug connector

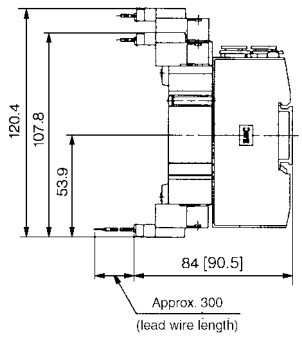

DIN terminal

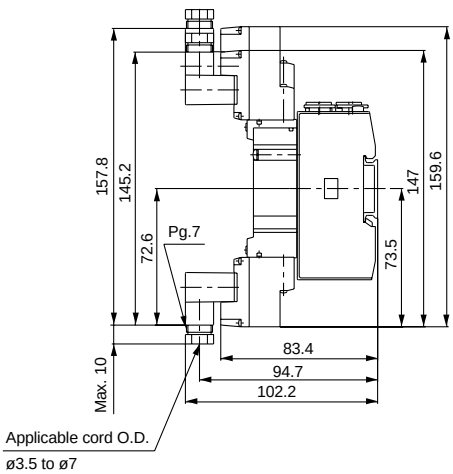

SS5Y5-45-□B-SS5Y53, #2 (#2 + #9 + #10 + #11 + #12)

Exploded View of DIN Rail Manifold

Type 45

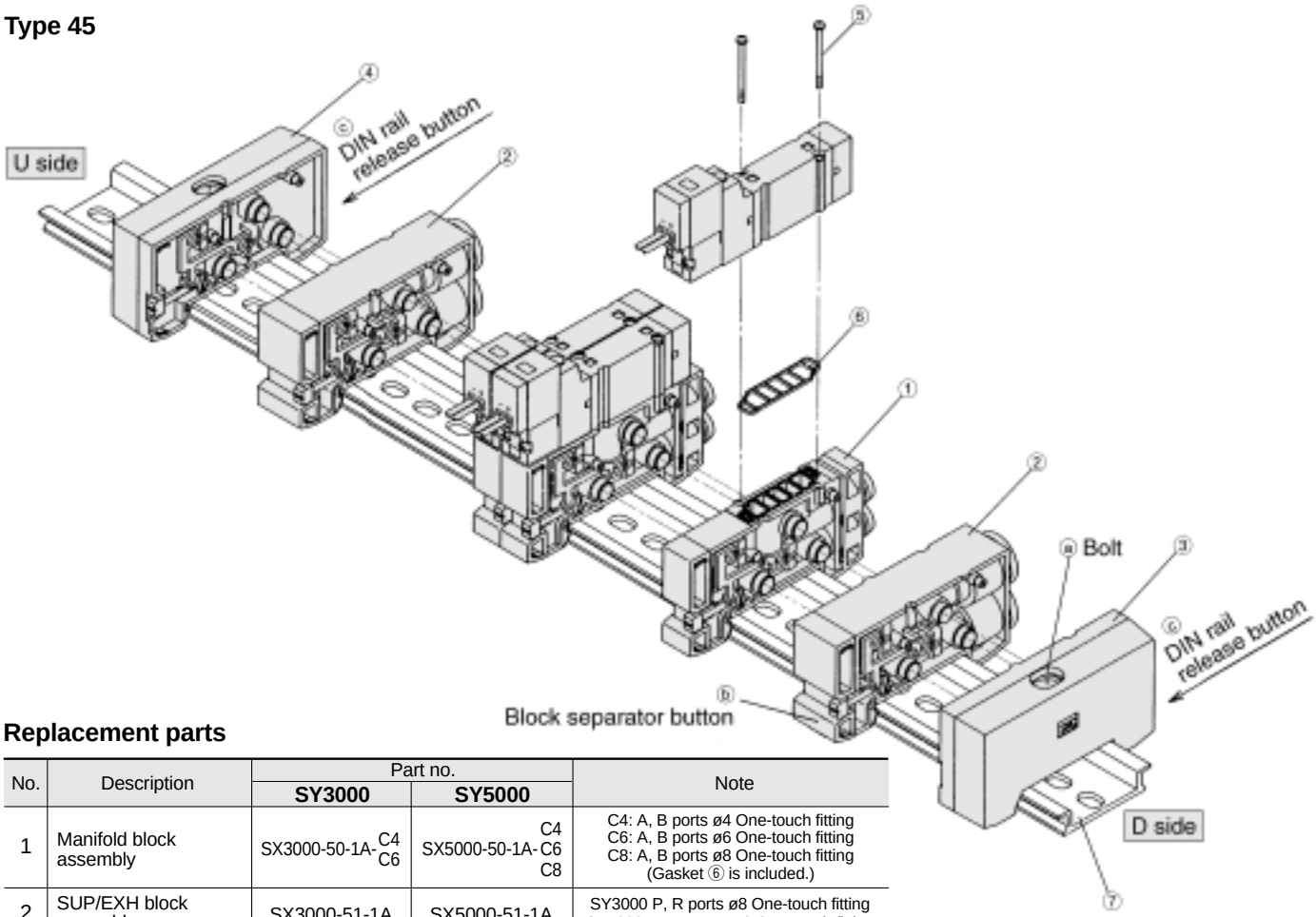

Replacement parts

No.	Description	Part no.		Note
		SY3000	SY5000	
1	Manifold block assembly	SX3000-50-1A-C4 / C6	SX5000-50-1A-C4 / C6 / C8	C4: A, B ports ø4 One-touch fitting C6: A, B ports ø6 One-touch fitting C8: A, B ports ø8 One-touch fitting (Gasket ⑥ is included.)
2	SUP/EXH block assembly	SX3000-51-1A	SX5000-51-1A	SY3000 P, R ports ø8 One-touch fitting SY5000 P, R ports ø10 One-touch fitting
3	End block assembly R	SX3000-52-1A	SX5000-52-1A	For D side
4	End block assembly L	SX3000-53-1A	SX5000-53-1A	For U side
5	Round head combination screw	SY3000-23-4	M3 x 26 (Flat nickel plated)	
6	Gasket	SX3000-57-4	SX5000-57-5	
7	DIN rail	VZ1000-11-1-□		Refer to page 98.

Manifold Base Expansion Stations can be added in a desired location.

1. Loosen bolts (a) which hold the manifold base until it begins to turn idly. (While pressing down the DIN rail release buttons (c) at two locations, remove the manifold base from the DIN rail.)
2. Press the manifold block assembly separator button (b) at the desired location until it locks, and then break the connection between block assemblies.
3. Mount the manifold block assembly to be added onto the DIN rail as shown in Figure 1.
4. Connect the manifold block assemblies by pressing them together until a click is heard, and secure them to the DIN rail with bolts (a).
   ⚠ **Caution** (Tightening torque: 1.4N·m)
   (To improve the sealing, after one end block has been secured, hold the block assemblies lightly while tightening the other end block.)

Figure 1. Block mounting

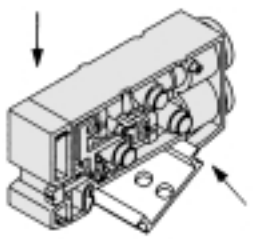

⚠ Caution

Note 1) When 10 or less stations are increased to 11 or more stations, add SUP/EXP block assemblies also.

Note 2) When disassembly and assembly are performed, insufficient connection of blocks or tightening of bolts (a) will cause air leakage. Be sure to confirm that there is no space between the manifold blocks and they are firmly secured on the DIN rail before supplying air. After supplying air, confirm that there is no air leakage.

How to Replace Fitting Assemblies

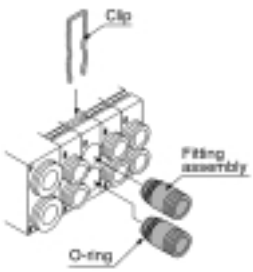

By replacing manifold block fitting assemblies on a type 45 manifold, the port size of the A and B ports can be changed.
To replace these parts, remove the clip with a flat head screw driver after the valve has been removed. Insert the fitting assemblies, and then reinsert the clip so that it does not protrude from the manifold block.

Fitting assembly part nos.

Port size	SY3000	SY5000
ø4 One-touch fitting	VVQ1000-50A-C4	VVQ1000-51A-C4
ø6 One-touch fitting	VVQ1000-50A-C6	VVQ1000-51A-C6
ø8 One-touch fitting	———	VVQ1000-51A-C8

Note 1) Fitting assemblies for P and R ports cannot be changed.
Note 2) Do not scratch or put foreign matter on the O-ring, as this will cause air leakage.

SY3000/5000
Base Mounted Type Manifold Stacking Type/DIN Rail Mount
Connector Box

CAD

How to Order Manifolds

SS5Y 3 – 45 – A U – 05 D – C6 –

Manifold series

3	SY3000
5	SY5000

Specification

Symbol	Specification
A	With connector box (positive COM specification)
NA	With connector box (negative COM specification)

The type of lead wire assemblies included is different.

Connector box mounting position

Symbol	Mounting position
U	U side
D	D side

Stations

Symbol	Stations	Note
02	2 stations	Up to 16 solenoids applicable
⋮	⋮	
16	16 stations	

SUP/EXH block assembly mounting position

Symbol	Mounting position	Applicable stations
U	U side	2 to 10
D	D side	
B	Both sides	2 to 16
M*	Special specification	

* For special specifications, order separately on a manifold specification sheet.

A/B port size

SY3000

Symbol	Port size
C4	ø4 One-touch fitting
C6	ø6 One-touch fitting
M*	Mixed

SY5000

Symbol	Port size
C4	ø4 One-touch fitting
C6	ø6 One-touch fitting
C8	ø8 One-touch fitting
M*	Mixed

* For mixed specifications, order separately on a manifold specification sheet.

Option

When a DIN rail longer than the specified stations is necessary, indicate the number of required stations. (Max. 20 stations)

Refer to page 183 regarding external pilot specifications and built-in silencer types.

How to Order Manifold Assemblies (Example)

(SY3000, positive COM, U side mounting)

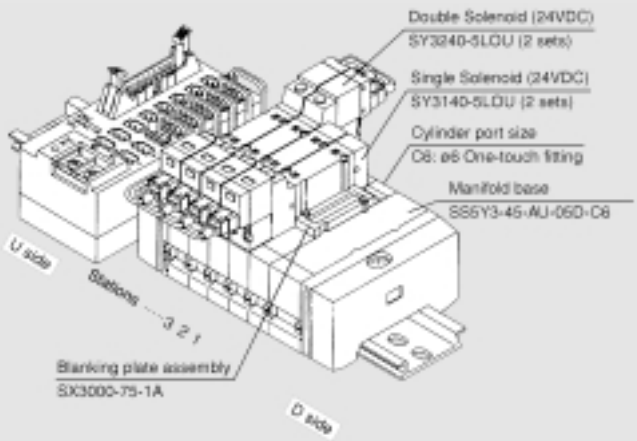

SS5Y3-45-AU-05D-C6 .....1 set (Type 45, 5 station manifold base part no.)
* **SX3000-75-1A** ..... 1 set (Blanking plate assembly part no.)
* **SY3140-5LOU** ..... 2 sets (Single solenoid part no.)
* **SY3240-5LOU** ..... 2 sets (Double solenoid part no.)

To order valves and options mounted onto the manifold at the factory, list the valve/option with an asterisk (*) in front of each part number.

Valves are assembled from the D side regardless of the mounting position of the connector box. Add the valve and option part numbers in order starting from the first station on the D side.
When entry of part numbers becomes complicated, indicate on a manifold specification sheet.
Also, SS5Y3/5-45-A U/D- □ □-C□ manifolds are only shipped with solenoid valves and lead wire assemblies mounted, therefore, be sure to list the part number for solenoid valves. When only the base unit is required, by listing the manifold part number on page 95 (specify the number which is 3 stations more than the required stations for the option at the end of S5Y3/5-45-□ □-C□-□), the connector box part number VZ3000-106-1A, and the rail stopper part number TXE1-SMC, the connector box can be mounted on the U side. (In this case, please note that dimensions L1 and L2 on pages 111 and 112 may vary.) Refer to page 113 regarding other parts.
(Manifold Specification Sheet on pages 203 and 204)

How to Order Valves

SY 5 2 40 – 5 LOU

Series

3	SY3000
5	SY5000

Type of actuation

1	2 position single
2	2 position double
3	3 position closed center
4	3 position exhaust center
5	3 position pressure center

Rated voltage

5	24VDC

Manual override

Nil	Non-locking push type
D	Push-turn locking slotted type
E	Push-turn locking lever type

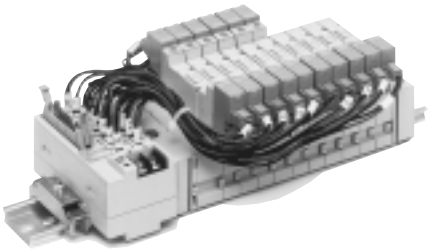

Manifold specifications

Model		SS5Y3-45-A/NA	SS5Y5-45-A/NA
Applicable valve		SY3□40	SY5□40
Manifold type		Stacking type/DIN rail	
P (SUP)/R (EXH) method		Common SUP/EXH	
Valve stations		2 to 16 stations Notes 1, 2)	
A, B port specifications	Location	Base	
	Direction	Side	
Port size	P, R port	C8 (ø8 One-touch fitting)	C10 (ø10 One-touch fitting)
	A, B port	C4 (ø4 One-touch fitting) C6 (ø6 One-touch fitting)	C4 (ø4 One-touch fitting) C6 (ø6 One-touch fitting) C8 (ø8 One-touch fitting)
Valve effective area Note 3) mm² (Cv factor)		C6: P to A/B 4.68 (0.26) A/B to R 4.68 (0.26)	C8: P to A/B 12.6 (0.7) A/B to R 12.6 (0.7)
Manifold base weight W (g) n: Number of stations		For 2 to 10 stations: W = 26n + 207 For 11 to 20 stations: W = 26n + 229	For 2 to 10 stations: W = 52n + 245 For 11 to 16 stations: W = 52n + 279
Applicable flat ribbon cable connector		Flat ribbon cable connector, Socket: 20 pin MIL type With strain relief, MIL-C-83503 conformity	
Wiring specifications		Positive COM specification (type 45-A), Negative COM specification (type 45-NA)	

Note 1) For 11 stations or more, supply pressure to P port on both sides and exhaust from R port on both sides.
Note 2) Due to restrictions depending on the number of solenoids, refer to the ordering procedures.
Note 3) Value when manifold base (5 stations) is mounted, with single action 2 position type.

Manifold wiring (Example layout circuit diagram)

Positive COM electrical circuit

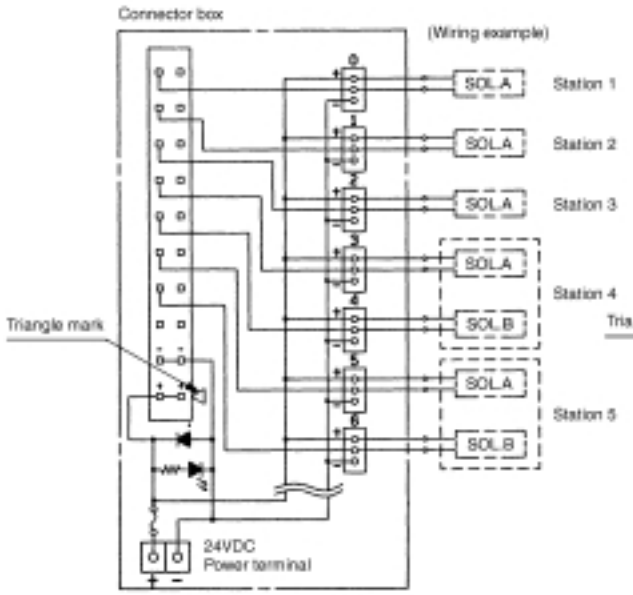

Negative COM electrical circuit

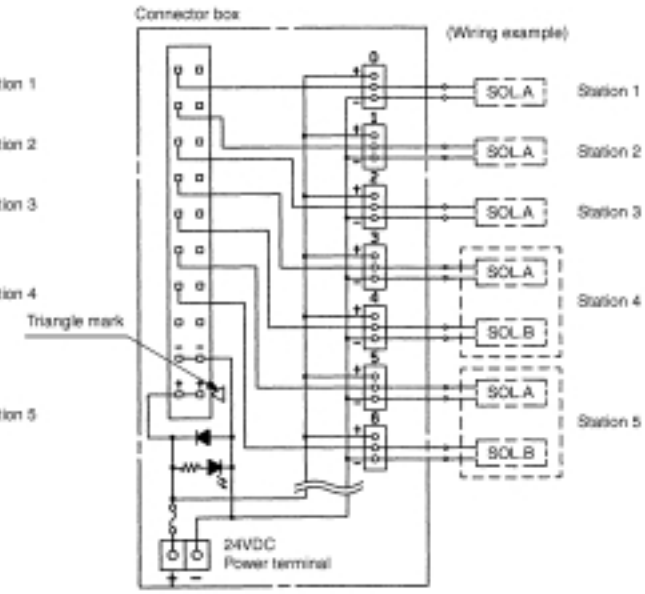

Note 1) Use of a connector box for positive COM allows direct connection of the transmission unit G71-OD16 manufactured by OMRON Corporation for the application of serial transmission. This can also be used with the PC wiring system.
Note 2) When an external power supply is required, connect the power supply to the power supply terminal. Since connecting the incorrect polarity will cause malfunction, be careful when connecting.
Note 3) Wiring is connected in order from 0 to 15 of the connector box on the D side where solenoids are placed.
Note 4) Use of other than non-polar type valves will cause a problem.

Example layout

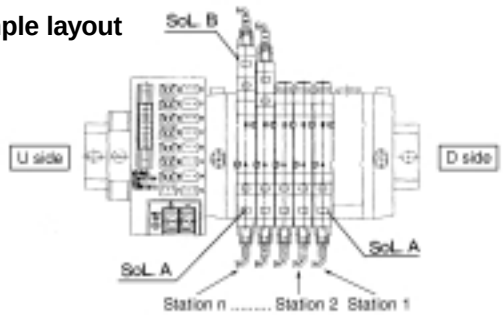

Manifold Options

■ Individual SUP spacer assembly

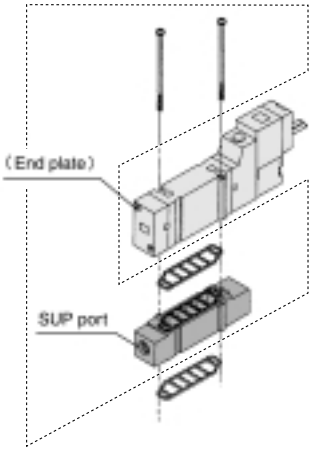

Series	Assembly part no.	Port size
SY3000	SY3000-38-2A	M5 x 0.8
SY5000	SY5000-38-2A	Rc 1/8

Note) The SUP port can be on the lead wire side or end plate side. (It is as shown above when shipped already assembled.)

■ Individual EXH spacer assembly

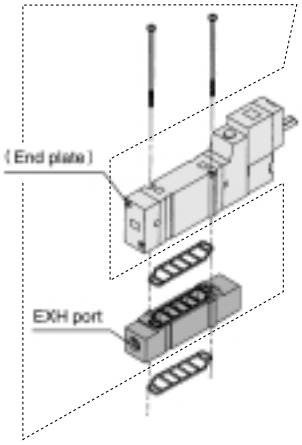

Series	Assembly part no.	Port size
SY3000	SY3000-39-2A	M5 x 0.8
SY5000	SY5000-39-2A	Rc 1/8

Note) The EXH port can be on the lead wire side or end plate side. (It is as shown above when shipped already assembled.)

■ Blanking plate assembly

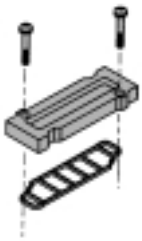

Series	Assembly part no.
SY3000	SX3000-75-1A
SY5000	SX5000-76-1A

⚠Caution

Mounting screw tightening torques

M2: 0.15N·m
M3: 0.6N·m
M4: 1.4N·m

■ Cable assembly

AXT100-FC20-$^{1}_{2}_{3}$

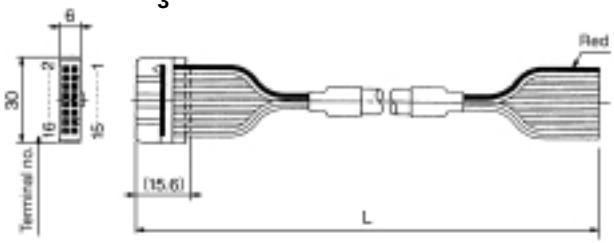

Flat ribbon cable connector assembly

Cable length (L)	Assembly part no.	Note
1.5m	AXT100-FC20-1	20 core cable x 22AWG
3m	AXT100-FC20-2	
5m	AXT100-FC20-3	

∗ For other commercial connectors, use a 20 pin type with strain relief conforming to MIL-C-83503.

Connector manufacturer examples

- **Sumitomo/3-M Limited**
- **Fujitsu, Ltd.**
- **Japan Aviation Electronics Industry, Ltd.**
- **J.S.T. Mfg. Co., Ltd.**

■ SUP block disc

By installing a SUP block disc in the pressure supply passage of the manifold base, two or more different pressures, high or low, can be supplied to one manifold.

Series	Part no.
SY3000	SX3000-77-1A
SY5000	SX5000-77-1A

■ EXH block disc

By installing an EXH block disc in the exhaust passage of the manifold base, the passage can be divided so that the exhaust from one valve will not affect other valves. (Two block discs are required to block both EXH ports.)

Series	Part no.
SY3000	SX3000-77-1A
SY5000	SX5000-77-1A

■ Labels for block disc

Labels are applied to blocks with SUP and EXH block discs for external confirmation of blocked passages. (3 labels per package)

VZ3000-123-1A

SUP block disc label

EXH block disc label

SUP/EXH block disc label

∗ When block discs are ordered with manifolds using a manifold specification sheet, block disc labels are already applied where block discs are installed at the time of shipment.

■ Silencer with One-touch fitting

Can be attached with one touch to the R (EXH) port of the manifold.

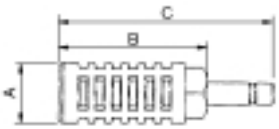

Series	Model	Effective area	A	B	C
SY3000 (ø8)	AN203-KM8	14mm²	ø16	26	51
SY5000 (ø10)	AN200-KM10	26mm²	ø22	53.8	80.8
	AN300-KM10	30mm²	ø25	70	97

■ Plug (white)

Insert into unused cylinder ports and SUP/EXH ports.
The minimum order quantity is 10 pieces. Order in multiples of 10.

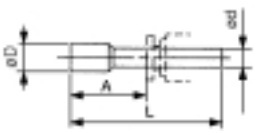

Dimensions

Applicable fitting size ød	Model	A	L	D
4	**KQ2P-04**	16	32	6
6	**KQ2P-06**	18	35	8
8	**KQ2P-08**	20.5	39	10
10	**KQ2P-10**	22	43	12

Manifold Options

■ How to order interface regulators (SY3000/5000 only)

Series SY3000

ARBY3000 — 05 — P — 2

Regulated port

P	P port
A1	A port (P port control type A port regulated)
B1	B port (P port control type B port regulated)

Pressure gauge connection port

05	Pressure gauge (G15-10-01) [for odd number stations]
06	Pressure gauge (G15-10-01) [for even number stations]
M1	Plug (M-5P)

Note) Note that for series ARBY3000 with pressure gauge, part numbers differ for odd number and even number stations to prevent interference between the pressure gauges when mounted on the manifold.

Series SY5000

ARBY5000 — 00 — P — 2

Regulated port

P	P port
A1	A port (P port control type A port regulated)
B1	B port (P port control type B port regulated)

Pressure gauge connection port

00	Pressure gauge (G15-10-01)
M1	Plug (M-5P)

ARBY3000-05-□-2
(for mounting on odd number stations)

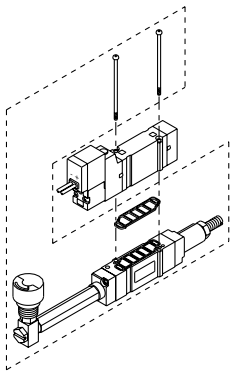

ARBY3000-06-□-2
(for mounting on even number stations)

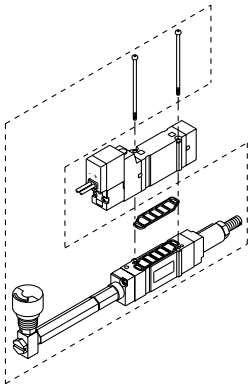

ARBY3000-M1-□-2

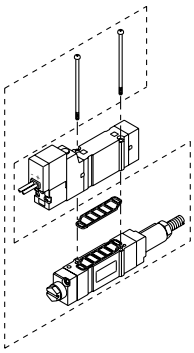

ARBY5000-00-□-2

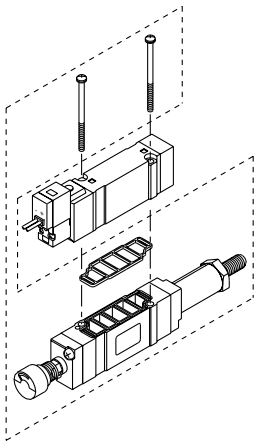

ARBY5000-M1-□-2

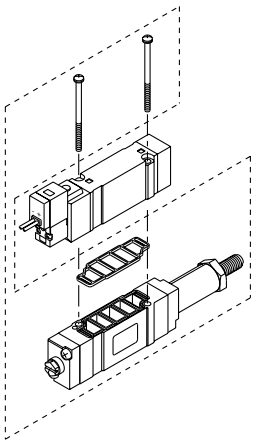

Accessories

Series	Round head combination screw	Gasket
ARBY3000	SY3000-23-10 (M2 x 36)	SX3000-57-4
ARBY5000	M3 x 48.5 (Flat nickel plated)	SX5000-57-5

⚠ Caution

Mounting screw tightening torques

M2: 0.15N·m
M3: 0.6N·m

Series SY3000 Dimensions CAD

SS5Y3-45-AU- Stations D-C4/C6

Scale: 30%

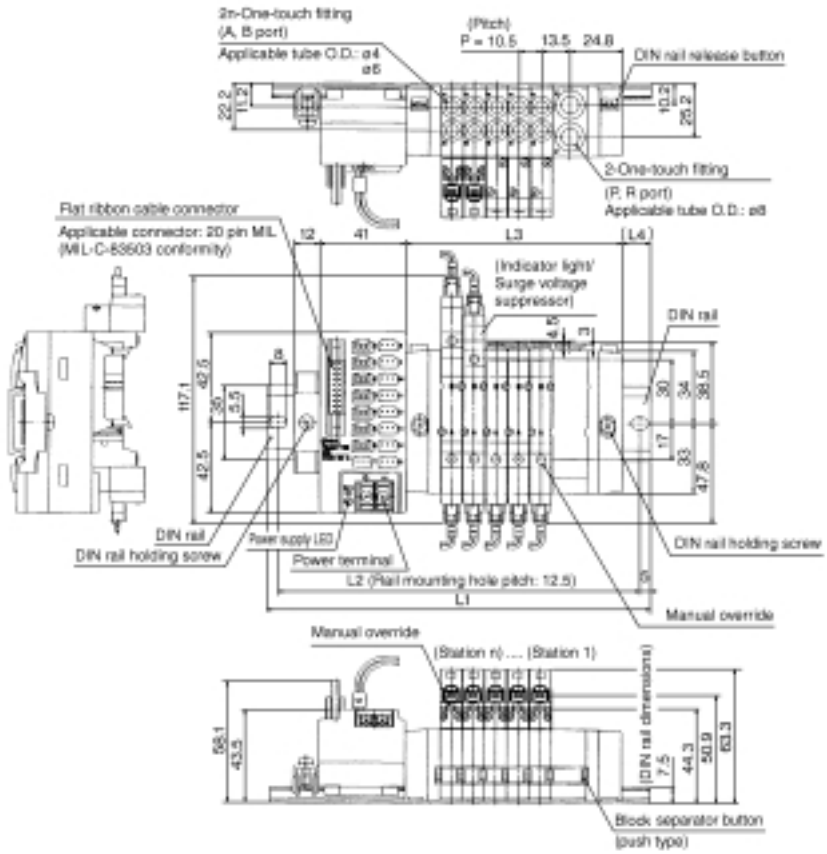

With interface regulator (with gauge)

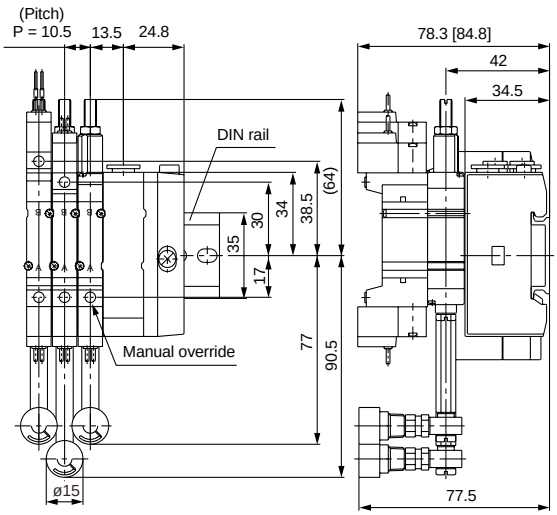

SS5Y3-45-AD- Stations U-C4/C6

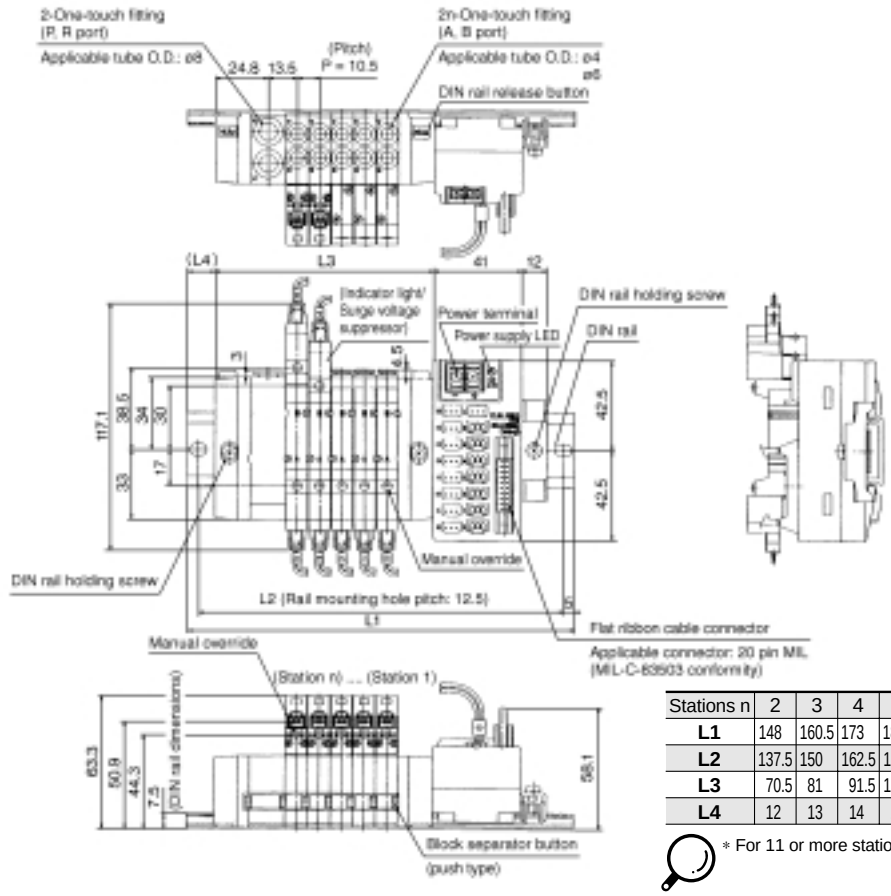

CAD SS5Y3-45-AU ..... SS5Y33, #3 (#3 + #7 + #8 + #9)
SS5Y3-45-AD ..... SS5Y33, #5 (#5 + #8 + #9 + #11)

Stations n	2	3	4	5	6	7	8	9	10	11	12	13	14	15	16
L1	148	160.5	173	185.5	198	210.5	210.5	223	235.5	260.5	273	285.5	298	310.5	310.5
L2	137.5	150	162.5	175	187.5	200	200	212.5	225	250	262.5	275	287.5	300	300
L3	70.5	81	91.5	102	112.5	123	133.5	144	154.5	181.5	192	202.5	213	223.5	234
L4	12	13	14	15	16	17	12	13	14	13	14	15	16	17	11.5

∗ For 11 or more stations, two SUP/EXH blocks are included.

Series SY5000 Dimensions CAD

SS5Y5-45-AU-Stations D-C4/C6/C8

Scale: 30%

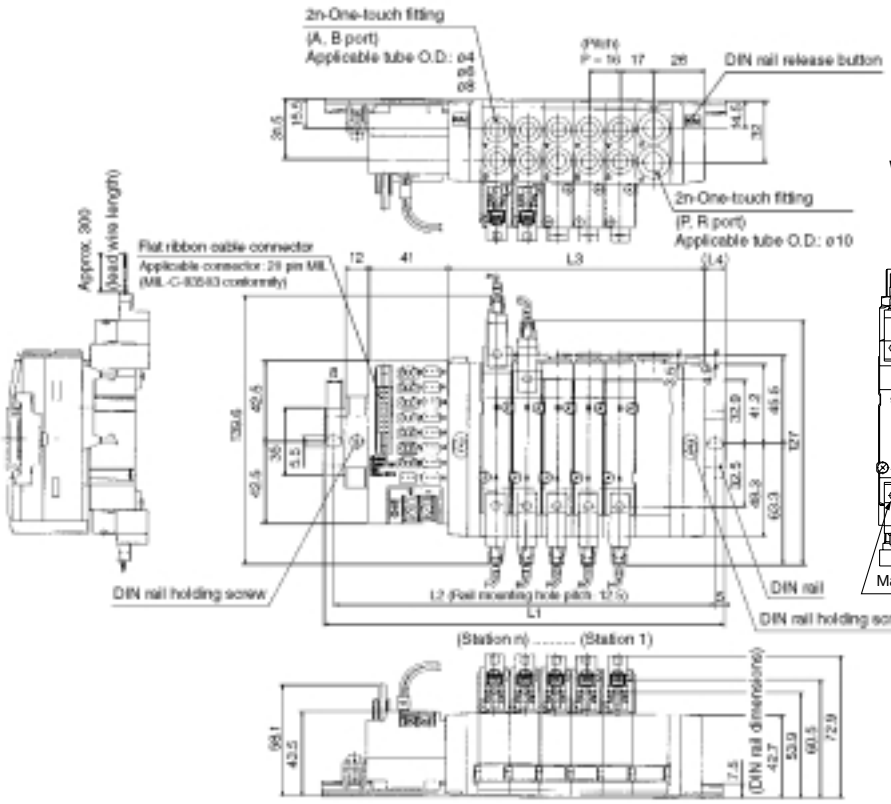

With interface regulator (with gauge)

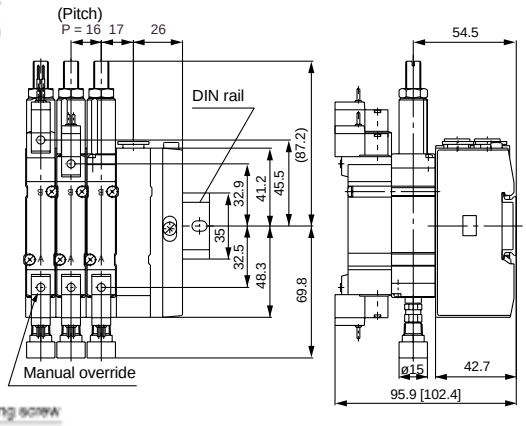

SS5Y5-45-AD-Stations U-C4/C6/C8

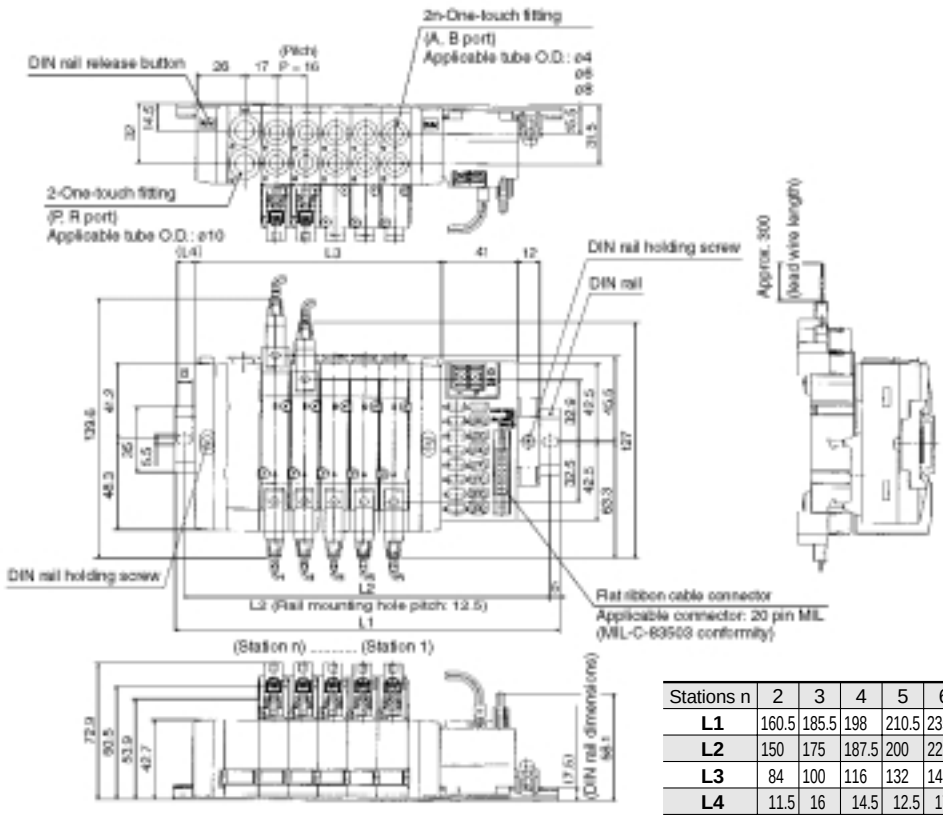

Stations n	2	3	4	5	6	7	8	9	10	11	12	13	14	15	16
L1	160.5	185.5	198	210.5	235.5	248	260.5	273	298	323	348	360.5	373	398	410.5
L2	150	175	187.5	200	225	237.5	250	262.5	287.5	312.5	337.5	350	362.5	387.5	400
L3	84	100	116	132	148	164	180	196	212	246	262	278	294	310	326
L4	11.5	16	14.5	12.5	17	15.5	13.5	12	16.5	12	16.5	14.5	13	17.5	15.5

CAD SS5Y5-45-AU ..... SS5Y53, #3 (#3 + #5 + #9 + #10 + #11)
SS5Y5-45-AD ..... SS5Y53, #5 (#5 + #9 + #10 + #11 + #13)

∗ For 11 or more stations, two SUP/EXH blocks are included.

Exploded View of DIN Rail Manifold

Type 45-$^{A}_{NA}$

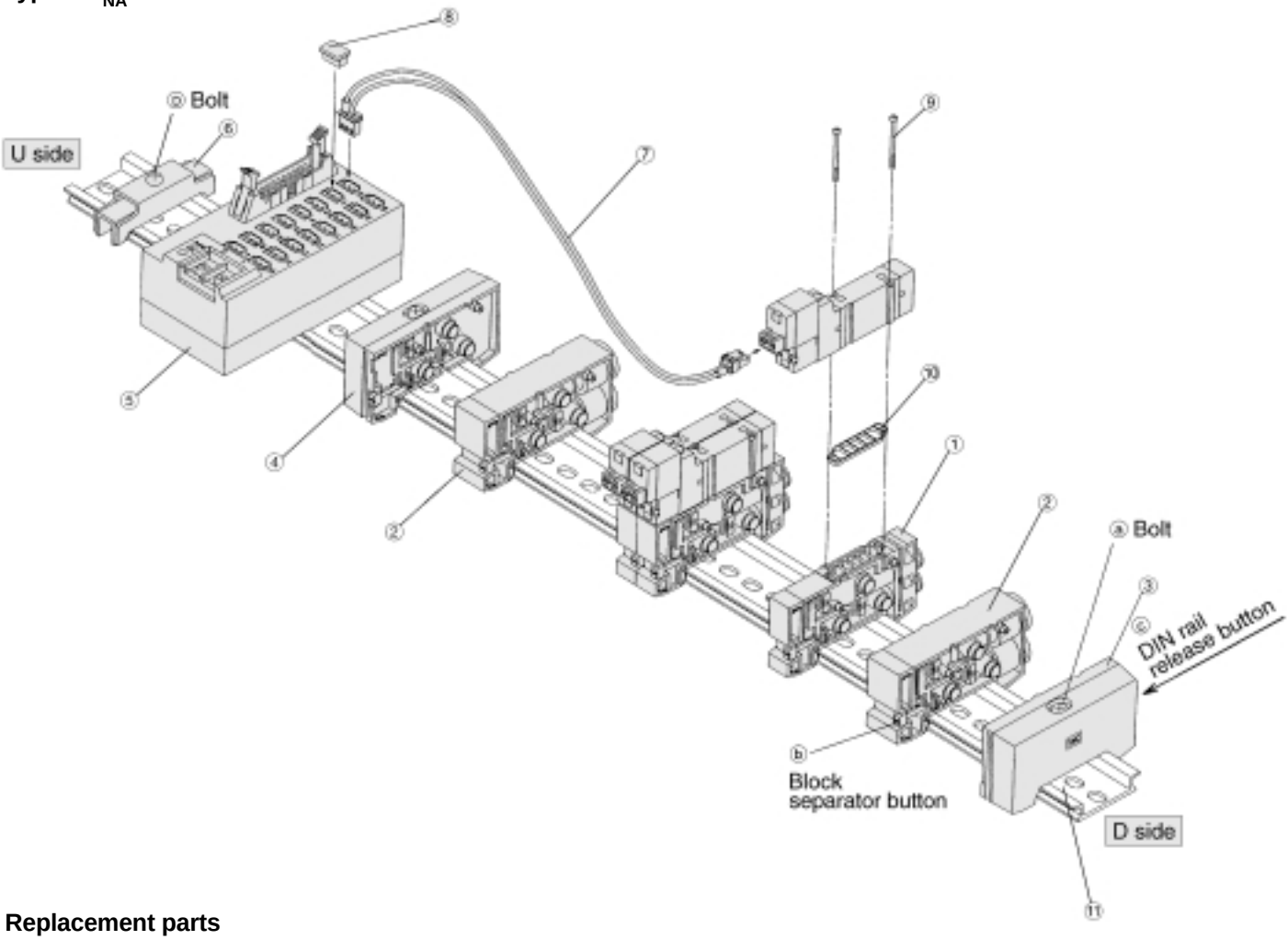

Replacement parts

No.	Description	Part no. SY3000	Part no. SY5000	Note
1	Manifold block assembly	SX3000-50-1A-C4 C6	SX5000-50-1A-C4 C6 C8	C4: A, B ports ø4 One-touch fitting C6: A, B ports ø6 One-touch fitting C8: A, B ports ø8 One-touch fitting (Gasket ⑩ is included.)
2	SUP/EXH block assembly	SX3000-51-1A	SX5000-51-1A	P, R ports SY3000 ø8 One-touch fitting P, R ports SY5000 ø10 One-touch fitting
3	End block assembly R	SX3000-52-1A	SX5000-52-1A	For D side
4	End block assembly L	SX3000-53-1A	SX5000-53-1A	For U side
5	Connector box	VZ3000-106-1A		24VDC only
6	Rail stopper	TXE1-SMC		Made by Kasuga Electronic Works, Ltd.
7	Connector assembly	SY3000-43-1A-□	SY3000-43-2A-□	Positive COM Type D, 2 to 8 stations Type U, 9 to 16 stations
		SY3000-43-2A-□	SY3000-43-3A-□	Positive COM Type D, 9 to 16 stations Type U, 2 to 8 stations
		SY3000-43-1NA-□	SY3000-43-2NA-□	Negative COM Type D, 2 to 8 stations Type U, 9 to 16 stations
		SY3000-43-2NA-□	SY3000-43-3NA-□	Negative COM Type D, 9 to 16 stations Type U, 2 to 8 stations
8	Dust cap	VZ3000-63-2		
9	Round head combination screw	SY3000-23-4	M3 x 26 (Flat nickel plated)	
10	Gasket	SX3000-57-4	SX5000-57-5	
11	DIN rail	VZ1000-11-1-□		Refer to page 98.

Manifold Base Expansion

Stations can be added in a desired location.

1. Loosen bolts (a) which hold the manifold base until it begins to turn idly. (While pressing down the DIN rail release buttons (c) at two locations, remove the manifold base from the DIN rail.)
2. Press the manifold block assembly separator button (b) at the desired location until it locks, and then break the connection between block assemblies.
3. Mount the manifold block assembly to be added onto the DIN rail as shown in Figure 1.
4. Connect the manifold block assemblies by pressing them together until a click is heard, and secure them to the DIN rail with bolts (a).
   ⚠ **Caution** (Tightening torque: 1.4N·m)
   (To improve the sealing, after one end block has been secured, hold the block assemblies lightly while tightening the other end block.)
5. To remove the connector box from the DIN rail, loosen the rail stopper bolt (D) and remove it. To remount it, press it against the connector block and tighten bolt (D).

Figure 1. Block mounting

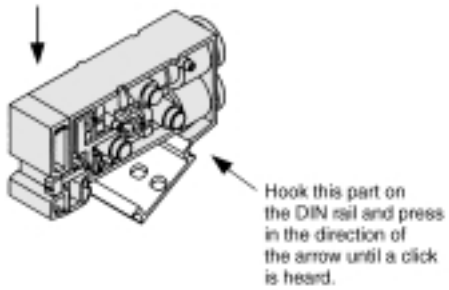

⚠ Caution

Note 1) When 10 or less stations are increased to 11 or more stations, add SUP/EXP block assemblies also.

Note 2) When disassembly and assembly are performed, insufficient connection of blocks or tightening of bolts (a) will cause air leakage. Be sure to confirm that there is no space between the manifold blocks and they are firmly secured on the DIN rail before supplying air. After supplying air, confirm that there is no air leakage.

Note 3) One connector assembly is required for each solenoid.
Also, if a number is required for the connector assembly mark tube, indicate the number at the end of the part number. (Numbers 0 to 15 are available for mark tube numbering.)
Example) Positive COM specification, type D for 2 to 8 stations, with number 10
SY3000-43-1A-10

How to Replace Fitting Assembly

By replacing manifold block fitting assemblies on a type 45 manifold, the port size of the A and B ports can be changed.
To replace these parts, remove the clip with a flat head screw driver after the valve has been removed. Insert the fitting assemblies, and then reinsert the clip so that it does not protrude from the manifold block.

Fitting assembly part nos.

Port size	SY3000	SY5000
ø4 One-touch fitting	VVQ1000-50A-C4	VVQ1000-51A-C4
ø6 One-touch fitting	VVQ1000-50A-C6	VVQ1000-51A-C6
ø8 One-touch fitting	———	VVQ1000-51A-C8

Note 1) Fitting assemblies for P and R ports cannot be changed.
Note 2) Do not scratch or put foreign matter on the O-ring, as this will cause air leakage.

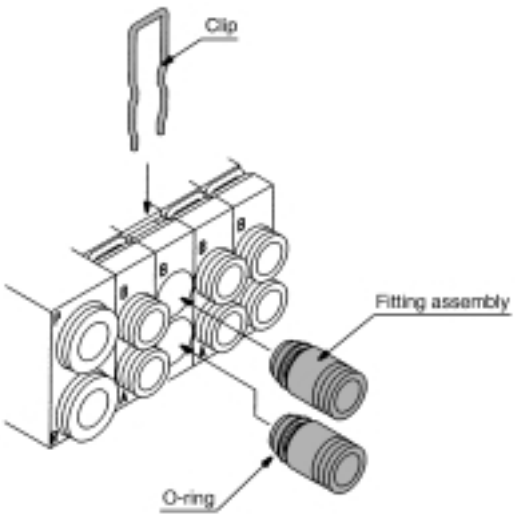

Type 45□

SY3000/5000
Base Mounted Type Manifold Stacking Type/DIN Rail Mount
Plug-in

CAD

How to Order Manifolds

Type 45F (D-sub connector 25 pin type)

SS5Y 3 – 45 □ F D – 05 U – C4 – □ – □

Manifold series

3	SY3000
5	SY5000

Common specification

Nil	Positive COM
N	Negative COM

Connector mounting position

Symbol	Mounting position
U	U side
D	D side

Stations

Symbol	Stations	Note
02	2	Single wiring specification (Up to 20 solenoids applicable)
⋮	⋮	
20	20	

Note 1) Includes the number of blanking plate assemblies.
Note 2) Two manifold stations are required for double solenoid 3 position valves (dual body type).

SUP/EXH block assembly mounting position

Symbol	Mounting position	Applicable stations
U	U side	2 to 10
D	D side	2 to 10
B	Both sides	2 to 20
M*	Special specifications	

* For special specifications, order separately on a manifold specification sheet.

A/B port size

SY3000

Symbol	Port size
C4	ø4 One-touch fitting
C6	ø6 One-touch fitting
M*	Mixed

SY5000

Symbol	Port size
C4	ø4 One-touch fitting
C6	ø6 One-touch fitting
C8	ø8 One-touch fitting
M*	Mixed

* For mixed specifications, order separately on a manifold specification sheet.

Voltage specification

Nil	24VDC
12V	12VDC

Option

When a DIN rail longer than the specified stations is necessary, indicate the number of required stations. (Max. 20 stations)

Refer to page 184 regarding external pilot specifications and built-in silencer.

How to Order Manifold Assemblies (Example)

(Type 45F/D-sub connector 25 pin type)

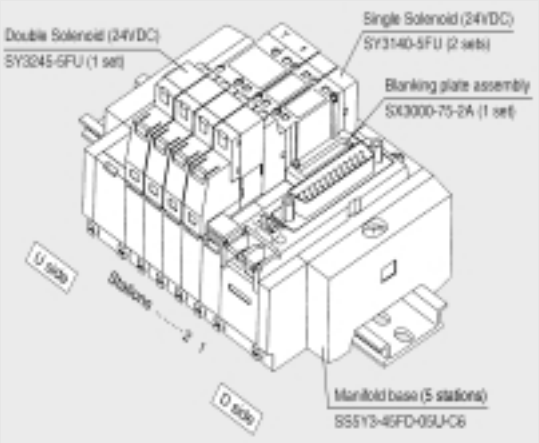

SS5Y3-45FD-05U-C6 ..... 1 set (Type 45F, D-sub connector 5 station manifold base part no.)
* **SX3000-75-2A** ..... 1 set (Blanking plate assembly part no.)
* **SY3140-5FU** ..... 2 sets (Single solenoid part no.)
* **SY3245-5FU** ..... 1 set (Double solenoid part no.)

To order valves and options mounted onto the manifold at the factory, list the valve/option with an asterisk (*) in front of each part number.

Valves are assembled from the D side regardless of the location of the connector. Since double solenoid 3 position valves (dual body type) require 2 manifold stations, be sure to specify the appropriate number of stations with the manifold part number. (Manifold Specification Sheet on pages 205 to 218)

How to Order Valves

(Types 45F, 45P□, 45T, 45T1)

2 position single **SY 3 1 4 0 – 5 FU □**

Double solenoid 3 position **SY 3 2 4 5 – 5 FU □**

Series

3	SY3000
5	SY5000

Type of actuation

2	2 position double
3	3 position closed center
4	3 position exhaust center
5	3 position pressure center

Dual body type (double solenoid 3 position)

Rated voltage

5	24VDC
6	12VDC

Manual override

Nil	Non-locking push type
D	Push-turn locking slotted type
E	Push-turn locking lever type

SMC

How to Order Manifolds

Type 45P□ (Flat ribbon cable type)

SS5Y 3 – 45 □ P □ D – 05 U – C4 – □ □

Manifold series

3	SY3000
5	SY5000

Common specification

Nil	Positive COM
N	Negative COM

Number of connector pins

Symbol	Pins	Applicable stations
Nil	26	2 to 20
G	20	2 to 16
H	10	2 to 8

Connector mounting position

Symbol	Mounting position
U	U side
D	D side

Stations (Includes the number of blanking plate assemblies.)

Option

When a DIN rail longer than the specified stations is necessary, indicate the number of required stations. (Max. 20 stations)

Rated voltage

Nil	24VDC
12V	12VDC

A/B port size

SY3000

Symbol	Port size
C4	ø4 One-touch fitting
C6	ø6 One-touch fitting
M*	Mixed

SY5000

Symbol	Port size
C4	ø4 One-touch fitting
C6	ø6 One-touch fitting
C8	ø8 One-touch fitting
M*	Mixed

∗ For mixed specifications, order separately on a manifold specification sheet.

SUP/EXH block assembly mounting position

Symbol	Mounting position	Applicable stations
U	U side	2 to 10
D	D side	2 to 10
B	Both sides	2 to 20
M*	Special specification	

∗ For special specifications, order separately on a manifold specification sheet.

26 pin connector (P)

Symbol	Stations	Note
02	2	Single wiring specification (Up to 20 solenoids applicable)
⋮	⋮	
20	20	

20 pin connector (PG)

Symbol	Stations	Note
02	2	Single wiring specification (Up to 16 solenoids applicable)
⋮	⋮	
20	16	

10 pin connector (PH)

Symbol	Stations	Note
02	2	Single wiring specification (Up to 8 solenoids applicable)
⋮	⋮	
08	8	

Note) Two manifold stations are required for double solenoid 3 position valves (dual body type).

Type 45T (9 pin terminal block type)

SS5Y 3 – 45T D – 05 U – C4 – □

Manifold series

3	SY3000
5	SY5000

Terminal block mounting position

Symbol	Mounting position
U	U side
D	D side

Stations

Symbol	Stations	Note
02	2	Single wiring specification (Up to 8 solenoids applicable)
⋮	⋮	
08	8	

Note 1) Includes the number of blanking plate assemblies.

Note 2) Two manifold stations are required for double solenoid 3 position valves (dual body type).

SUP/EXH block assembly mounting position

Symbol	Mounting position	Applicable stations
U	U side	2 to 8
D	D side	2 to 8
B	Both sides	2 to 8
M*	Special specifications	

∗ For special specifications, order separately on a manifold specification sheet.

Option

When a DIN rail longer than the specified stations is necessary, indicate the number of required stations. (Max. 20 stations)

A/B port size

SY3000

Symbol	Port size
C4	ø4 One-touch fitting
C6	ø6 One-touch fitting
M*	Mixed

SY5000

Symbol	Port size
C4	ø4 One-touch fitting
C6	ø6 One-touch fitting
C8	ø8 One-touch fitting
M*	Mixed

∗ For mixed specifications, order separately on a manifold specification sheet.

Type 45T1 (18 pin terminal block type)

SS5Y 3 – 45T1 D – 15 B – C4 – □

Manifold series

3	SY3000
5	SY5000

Terminal block mounting position

Symbol	Mounting position
U	U side
D	D side

Stations

Symbol	Stations	Note
02	2	Single wiring specification (Up to17 solenoids applicable)
⋮	⋮	
17	17	

Note 1) Includes the number of blanking plate assemblies.

Note 2) Two manifold stations are required for double solenoid 3 position valves (dual body type).

SUP/EXH block assembly mounting position

Symbol	Mounting position	Applicable stations
U	U side	2 to 10
D	D side	2 to 10
B	Both sides	2 to 17
M*	Special specifications	

∗ For special specifications, order separately on a manifold specification sheet.

Option

When a DIN rail longer than the specified stations is necessary, indicate the number of required stations. (Max. 20 stations)

A/B port size

SY3000

Symbol	Port size
C4	ø4 One-touch fitting
C6	ø6 One-touch fitting
M*	Mixed

SY5000

Symbol	Port size
C4	ø4 One-touch fitting
C6	ø6 One-touch fitting
C8	ø8 One-touch fitting
M*	Mixed

∗ For mixed specifications, order separately on a manifold specification sheet.

Note) The terminal block (type 45T□) manifold has no common polarity. It can be used for both positive and negative COM.

How to Order Manifolds

Type 45G (Flat ribbon cable/PC wiring applicable)

SS5Y 3 – 45G D – 05 U □ – C4 – □

Manifold series

3	SY3000
5	SY5000

Connector mounting position

Symbol	Mounting position
U	U side
D	D side

Stations

Symbol	Stations	Note
02	2	Single wiring specification (Up to 16 solenoids applicable)
⋮	⋮	
16	16	

Note 1) Two manifold stations are required for double solenoid 3 position valves (dual body type).

Note 2) Includes the number of blanking plate assemblies.

Option

When a DIN rail longer than the specified stations is necessary, indicate the number of required stations. (Max. 20 stations)

A/B port size

SY3000

Symbol	Port size
C4	ø4 One-touch fitting
C6	ø6 One-touch fitting
M*	Mixed

SY5000

Symbol	Port size
C4	ø4 One-touch fitting
C6	ø6 One-touch fitting
C8	ø8 One-touch fitting
M*	Mixed

* For mixed specifications, order separately on a manifold specification sheet.

SUP/EXH block assembly specification

Symbol	Specification
Nil	Internal pilot
R	External pilot
S	Internal pilot with built-in silencer
RS	External pilot with built-in silencer

SUP/EXH block assembly mounting position

Symbol	Mounting position	Applicable stations
U	U side	2 to 10
D	D side	2 to 10
B	Both sides	2 to 16
M*	Special specifications	

* For special specifications, order separately on a manifold specification sheet.

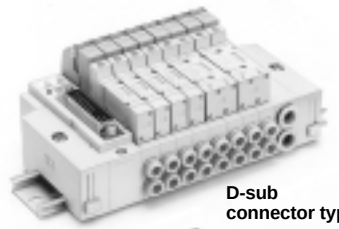

D-sub connector type

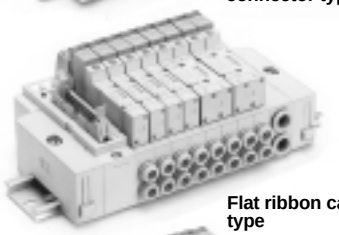

Flat ribbon cable type

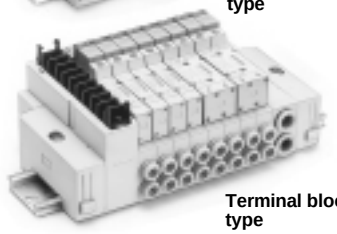

Terminal block type

Manifold specifications

Model			D-sub connector type 45F	Flat ribbon cable type 45P□			Terminal block type		Flat ribbon cable PC wiring applicable
				45P	45PG	45PH	45T	45T1	45G
Manifold type			Plug-in type						
P (SUP)/R (EXH) method			Common SUP/EXH						
Valve stations Notes 1, 2)			2 to 20		2 to 16	2 to 8		2 to 17	2 to 16
A, B port specifications		Location	Base						
		Direction	Side						
Port size	P, R port	SY3000	C8 (ø8 One-touch fitting)						
		SY5000	C10 (ø10 One-touch fitting)						
	A, B port	SY3000	C4 (ø4 One-touch fitting)/C6 (ø6 One-touch fitting)						
		SY5000	C4 (ø4 One-touch fitting)/C6 (ø6 One-touch fitting)/C8 (ø8 One-touch fitting)						
Valve effective area Note 3) mm² (Cv factor)		SY3000	C6: P to A/B 4.68 (0.26), A/B to R 4.68 (0.26)						
		SY5000	C8: P to A/B 12.6 (0.7), A/B to R 12.6 (0.7)						
Applicable connector			D-sub connector Conforming to MIL-C-24308 JIS-X-5101	Flat ribbon cable connector Socket: 26 pin MIL type With strain relief Conforming to MIL-C-83503	Flat ribbon cable connector Socket: 20 pin MIL type With strain relief Conforming to MIL-C-83503	Flat ribbon cable connector Socket: 10 pin MIL type With strain relief Conforming to MIL-C-83503	Terminal block (M3) 9 pins	Terminal block (M3) 18 pins	Flat ribbon cable connector Socket: 20 pin MIL type With strain relief Conforming to MIL-C-83503
Internal wiring			Positive COM (45□), Negative COM (45N□)				Common positive and negative COM		Positive COM
Manifold base weight W (g) n: Number of stations (For D-sub connector)		SY3000	For 2 to 10 stations: W = 26n + 172 For 11 to 20 stations: W = 26n + 199				Valve weight Single: 51 Double: 77 3 position: 82		
		SY5000	For 2 to 10 stations: W = 54n + 227 For 11 to 20 stations: W = 54n + 264				Valve weight Single: 59 Double: 102 3 position: 112.6		

Note 1) For 11 stations or more, supply pressure to P port on both sides and exhaust from R port on both sides.
Note 2) Due to restrictions depending on the number of solenoids, refer to the ordering procedures.
Note 3) Value when manifold base (5 stations) is mounted, with single action 2 position type.

Manifold Options

■ Blanking plate assembly

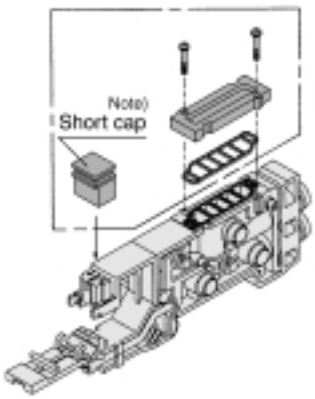

Series	Assembly part no.
SY3000	SX3000-75-2A
SY5000	SX5000-76-2A

Note 1) When mounting a blanking plate, be sure to mount a short cap also.
Note 2) Two manifold stations are required for double solenoid 3 position valves (dual body type).

■ SUP block disc

By installing a SUP block disc in the pressure supply passage of the manifold base, two or more different pressures, high or low, can be supplied to one manifold.

Series	Part no.
SY3000	SX3000-77-1A
SY5000	SX5000-77-1A

■ EXH block disc

By installing an EXH block disc in the exhaust passage of the manifold base, the passage can be divided so that the exhaust from one valve will not affect another valve. (Two block discs are required to block both EXH ports.)

Series	Part no.
SY3000	SX3000-77-1A
SY5000	SX5000-77-1A

■ Labels for block disc

Labels are applied to blocks with SUP and EXH block discs for external confirmation of blocked passages. (3 labels per package)

VZ3000-123-1A (SY3000/5000 common)

SUP block disc label

EXH block disc label

SUP/EXH block disc label

∗ When block discs are ordered with manifolds using a manifold specification sheet, block disc labels are already applied where block discs are installed at the time of shipment.

■ Silencer with One-touch fitting

Can be attached with one touch to the R (EXH) port of the manifold.

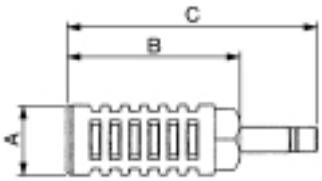

Series	Model	Effective area	A	B	C
SY3000 (ø8)	AN203-KM8	14mm²	ø16	26	51
SY5000 (ø10)	AN200-KM10	26mm²	ø22	53.8	80.8
	AN300-KM10	30mm²	ø25	70	97

■ Plug (white)

Insert into unused cylinder ports and SUP/EXH ports.
The minimum order quantity is 10 pieces. Order in multiples of 10.

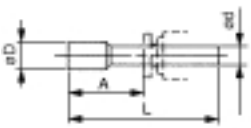

Dimensions

Applicable fitting size ød	Model	A	L	D
4	**KQ2P-04**	16	32	6
6	**KQ2P-06**	18	35	8
8	**KQ2P-08**	20.5	39	10
10	**KQ2P-10**	22	43	12

⚠Caution

Mounting screw tightening torques

M2: 0.15N·m
M3: 0.6N·m
M4: 1.4N·m

Manifold Options

■ D-sub connector (25 pins)/Cable assembly

AXT100-DS25-015 / 030 / 050

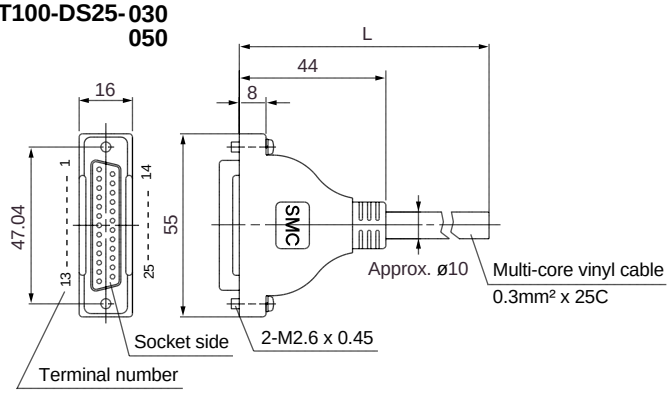

D-sub connector cable assembly wire color by terminal number

Terminal no.	Lead wire color	Dot marking
1	Black	None
2	Brown	None
3	Red	None
4	Orange	None
5	Yellow	None
6	Pink	None
7	Blue	None
8	Purple	White
9	Gray	Black
10	White	Black
11	White	Red
12	Yellow	Red
13	Orange	Red
14	Yellow	Black
15	Pink	Black
16	Blue	White
17	Purple	None
18	Gray	None
19	Orange	Black
20	Red	White
21	Brown	White
22	Pink	Red
23	Gray	Red
24	Black	White
25	White	None

D-sub connector cable assembly

Cable length (L)	Assembly part no.	Note
1.5m	AXT100-DS25-015	25 core cable x 24AWG
3m	AXT100-DS25-030	
5m	AXT100-DS25-050	

∗ For other commercial connectors, use a 25 pin type female connector conforming to MIL-C-24308.

Electrical characteristics

Item	Characteristics
Conductor resistance Ω/km, 20°C	65 or less
Withstand voltage V, 1min., AC	1000
Insulation resistance MΩkm, 20°C	5 or more

Note) The minimum bending radius for D-sub connector is 20mm.

Connector manufacturer examples

- **Hirose Electric Company**
- **Fujitsu, Ltd.**
- **Japan Aviation Electronics Industry, Ltd.**
- **J.S.T. Mfg. Co., Ltd.**

■ Flat ribbon cable type/Cable assembly

AXT100-FC□-1 / 2 / 3

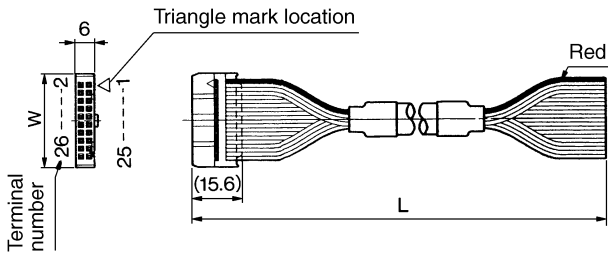

Flat ribon cable assembly

Cable length (L)	10 pins	20 pins	26 pins
1.5m	AXT100-FC10-1	AXT100-FC20-1	AXT100-FC26-1
3m	AXT100-FC10-2	AXT100-FC20-2	AXT100-FC26-2
5m	AXT100-FC10-3	AXT100-FC20-3	AXT100-FC26-3
Connector width (W)	17.2	30	37.5

∗ For other commercial connectors, use a type with strain relief conforming to MIL-C-83503.

Connector manufacturer examples

- **Hirose Electric Company**
- **Sumitomo/3-M Limited**
- **Fujitsu, Ltd.**
- **Japan Aviation Electronics Industry, Ltd.**
- **J.S.T. Mfg. Co., Ltd.**

■ DIN rail dimensions

VZ1000-11-1-□

● Refer to the table below for dimension L.

∗ Specify a number inside □ from the DIN rail dimension table below.

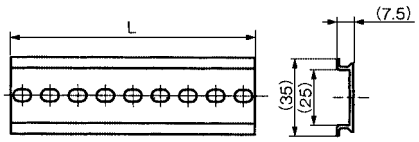

No.	0	1	2	3	4	5	6	7	8	9	10
Dimension L	98	110.5	123	135.5	148	160.5	173	185.5	198	210.5	223
No.	11	12	13	14	15	16	17	18	19	20	21
Dimension L	235.5	248	260.5	273	285.5	298	310.5	323	335.5	348	360.5
No.	22	23	24	25	26	27	28	29	30	31	32
Dimension L	373	385.5	398	410.5	423	435.5	448	460.5	473	485.5	498
No.	33	34	35	36	37	38	39	40	41	42	43
Dimension L	510.5	523	535.5	548	560.5	573	585.5	598	610.5	623	635.5
No.	44	45	46	47	48	49	50	51	52	53	54
Dimension L	648	660.5	673	685.5	698	710.5	723	735.5	748	760.5	773
No.	55	56	57	58	59	60	61	62	63	64	65
Dimension L	785.5	798	810.5	823	835.5	848	860.5	873	885.5	898	910.5
No.	66	67	68	69	70	71					
Dimension L	923	935.5	948	960.5	973	985.5					

Note) Refer to dimension L1 on pages starting with 125 for lengths that correspond to the number of manifold stations.

Manifold Internal Wiring

45(N)F/D-sub Connector Type

Use of a D-sub connector for electrical connection helps to achieve simplification and labor savings in connection procedures. Also, connectors conforming to MIL standards are used for wide interchangeability.

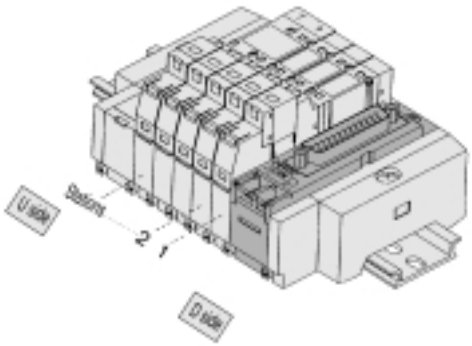

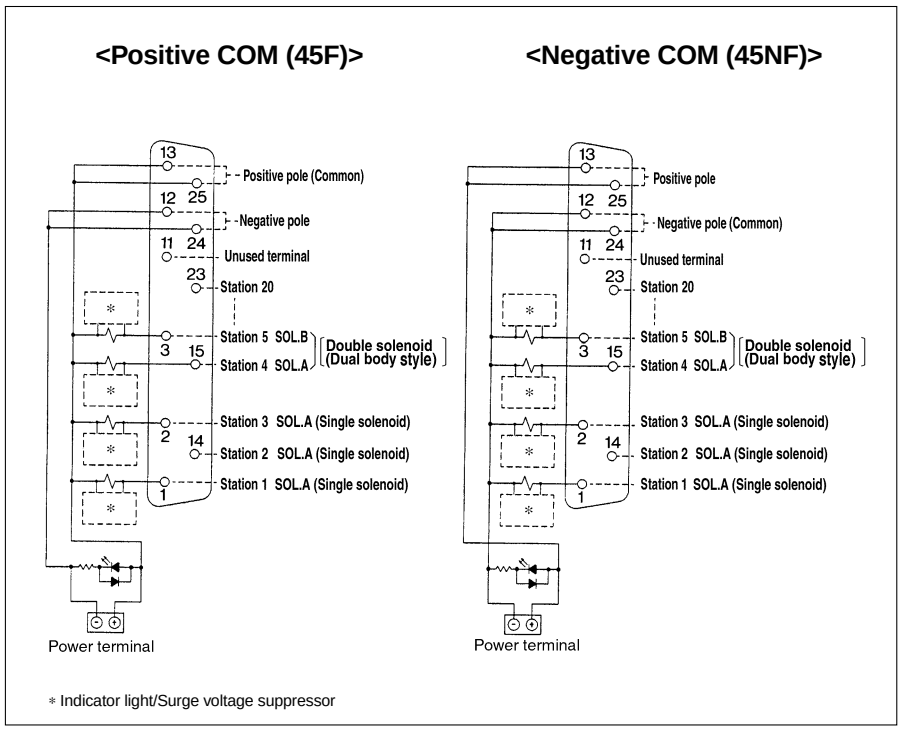

Note 1) When an external power supply is required, connect the power supply to the power terminal.

Note 2) A maximum of 20 manifold stations and 20 solenoids can be used. (Contact SMC if more than these quantities are required.)

Note 3) Valves are numbered from the D side regardless of the mounting position of the connector.

45(N)P/Flat Ribbon Cable Type (26 Pins)

Use of a flat ribbon cable connector for electrical connection helps to achieve simplification and labor savings in connection procedures. Also, connectors conforming to MIL standards are used for wide interchangeability.

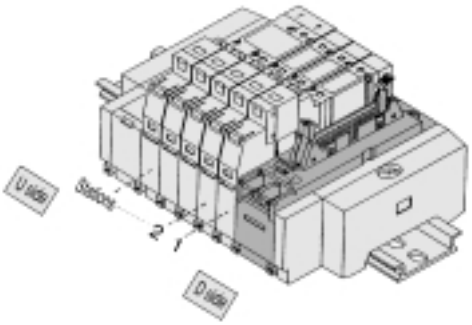

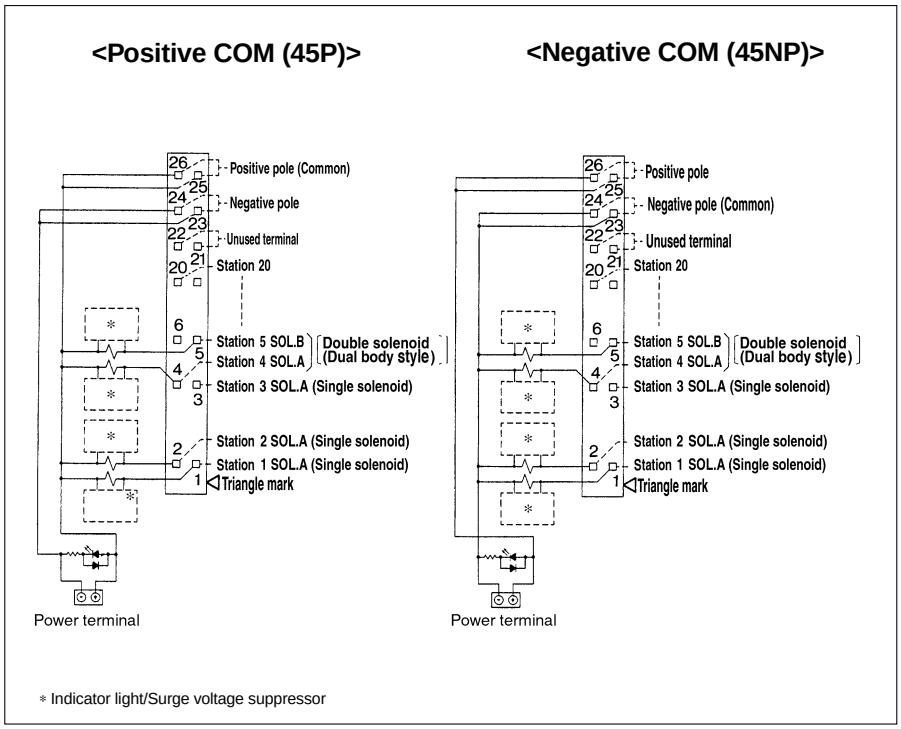

Note 1) When an external power supply is required, connect the power supply to the power terminal.

Note 2) A maximum of 20 manifold stations and 20 solenoids can be used. (Contact SMC if more than these quantities are required.)

Note 3) Valves are numbered from the D side regardless of the mounting position of the connector.

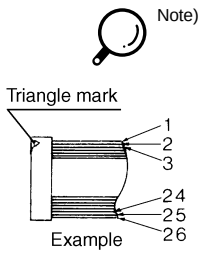

Note) Terminal numbers are not indicated on the connectors. The terminal numbers indicated in the connector schematic shown on the right show the correlation if the inserted connector's flat ribbon cable were numbered 1 to 26 from the triangle mark side, as shown in the figure to the left.

45(N)PG/Flat Ribbon Cable Type (20 Pins)

Use of a flat ribbon cable connector for electrical connection helps to achieve simplification and labor savings in connection procedures. Also, connectors conforming to MIL standards are used for wide interchangeability.

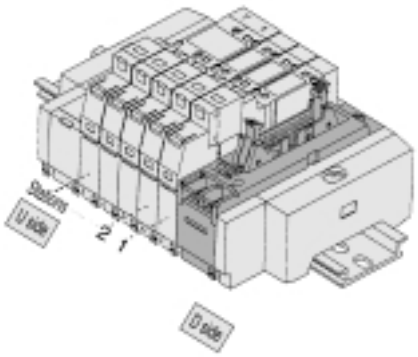

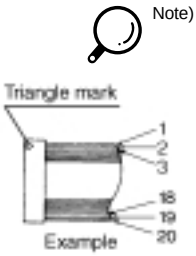

Note) Terminal numbers are not indicated on the connectors. The terminal numbers indicated in the connector schematic shown on the right show the correlation if the inserted connector's flat ribbon cable were numbered 1 to 20 from the triangle mark side, as shown in the figure to the left.

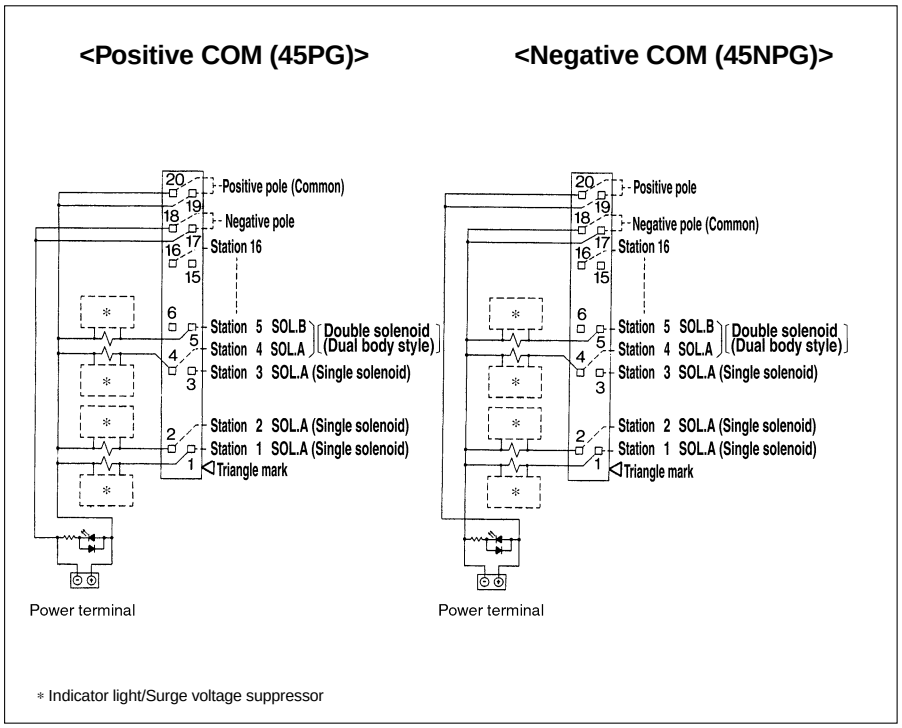

Note 1) When an external power supply is required, connect the power supply to the power terminal.

Note 2) A maximum of 16 manifold stations and 16 solenoids can be used. (Contact SMC if more than these quantities are required.)

Note 3) Valves are numbered from the D side regardless of the mounting position of the connector.

45(N)PH/Flat Ribbon Cable Type (10 Pins)

Use of a flat ribbon cable connector for electrical connection helps to achieve simplification and labor savings in connection procedures. Also, connectors conforming to MIL standards are used for wide interchangeability.

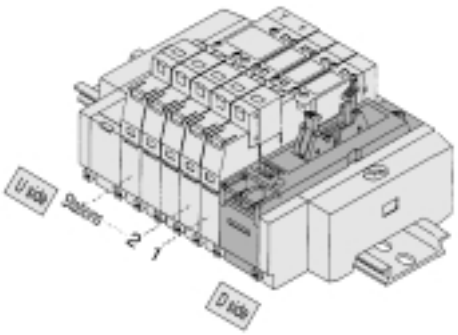

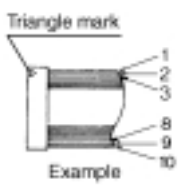

Note) Terminal numbers are not indicated on the connectors. The terminal numbers indicated in the connector schematic shown on the right show the correlation if the inserted connector's flat ribbon cable were numbered 1 to 10 from the triangle mark side, as shown in the figure to the left.

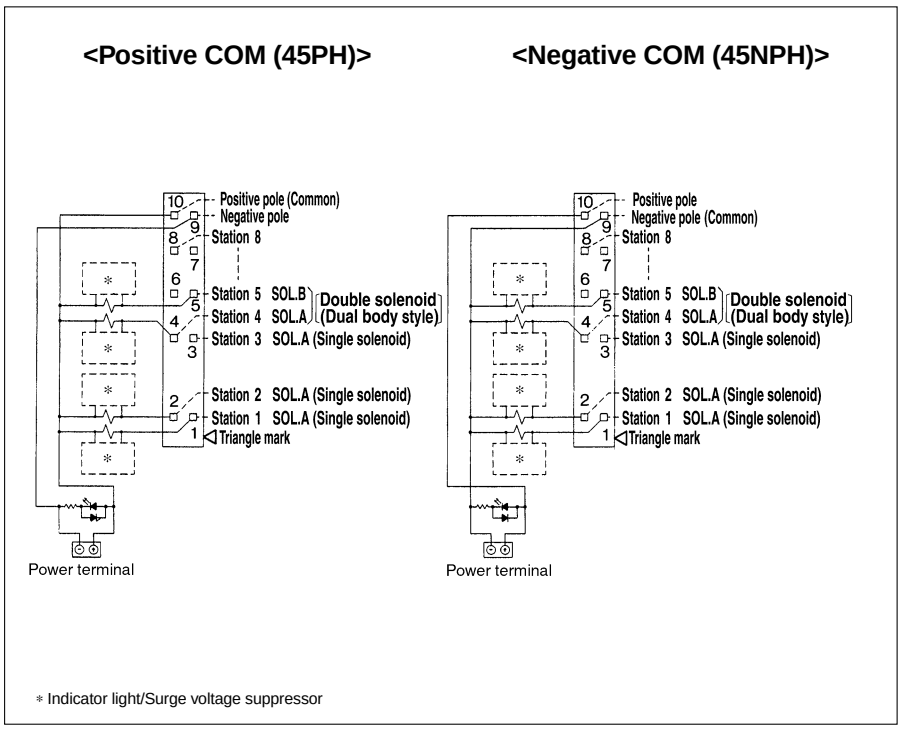

Note 1) When an external power supply is required, connect the power supply to the power terminal.

Note 2) A maximum of 8 manifold stations and 8 solenoids can be used. (Contact SMC if more than these quantities are required.)

Note 3) Valves are numbered from the D side regardless of the mounting position of the connector.

Manifold Internal Wiring

45T/Terminal Block Type

Use of a terminal block type for electrical connection allows direct connection without lead wire work.

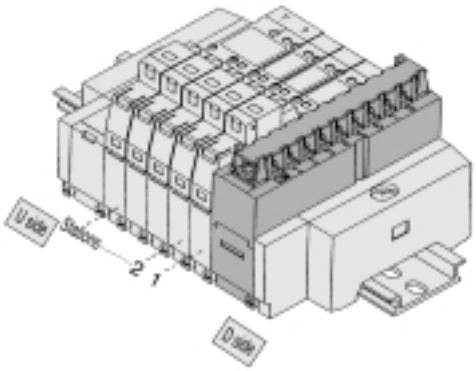

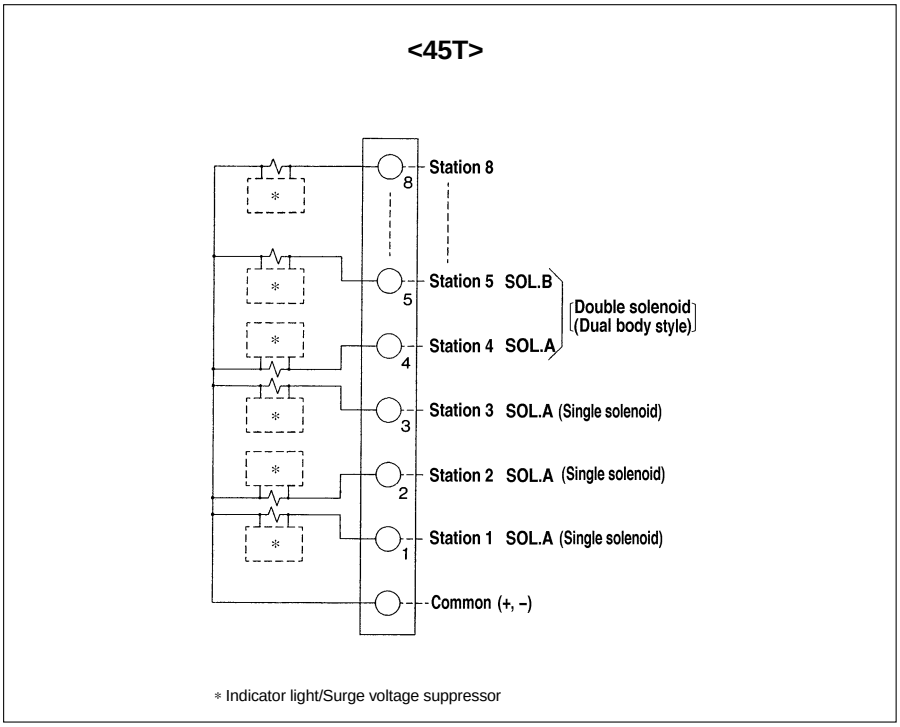

Note 1) A maximum of 8 manifold stations and 8 solenoids can be used. (Contact SMC if more than these quantities are required.)

Note 2) Valves are numbered from the D side regardless of the mounting position of the connector.

Note 3) Since the COM wiring does not have polarity, use a positive power supply for the positive COM specification and a negative power supply for the negative COM specification.

45T1/Terminal Block Type

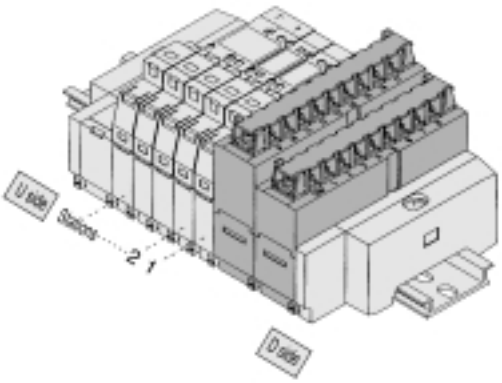

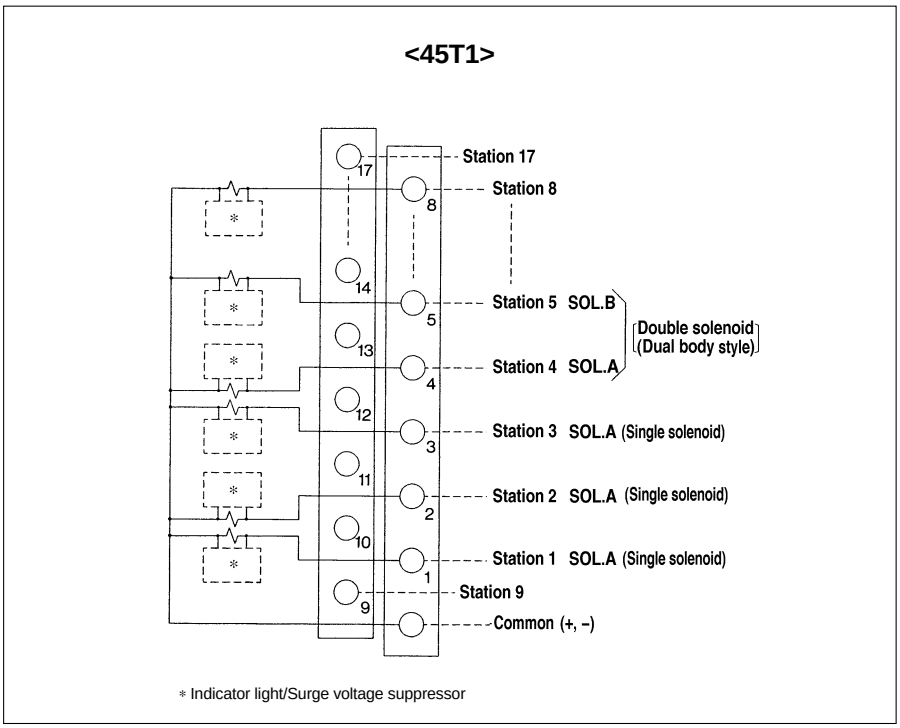

Note 1) A maximum of 17 manifold stations and 17 solenoids can be used. (Contact SMC if more than these quantities are required.)

Note 2) Valves are numbered from the D side regardless of the mounting position of the connector.

Note 3) Since the COM wiring does not have polarity, use a positive power supply for the positive COM specification and a negative power supply for the negative COM specification.

Manifold Internal Wiring

45G/Flat Ribbon Cable Type (PC wiring applicable)

A 20 pin flat ribbon cable connector type manifold that can be used with the PC wiring system.

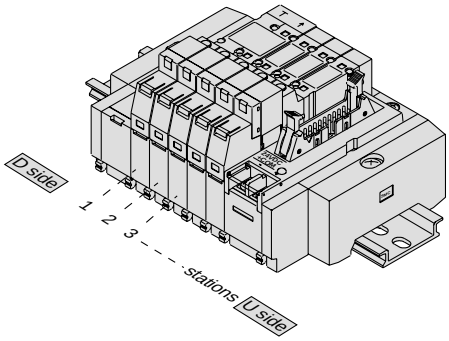

Electrical circuit diagram (wiring shown below are all double solenoid connections)

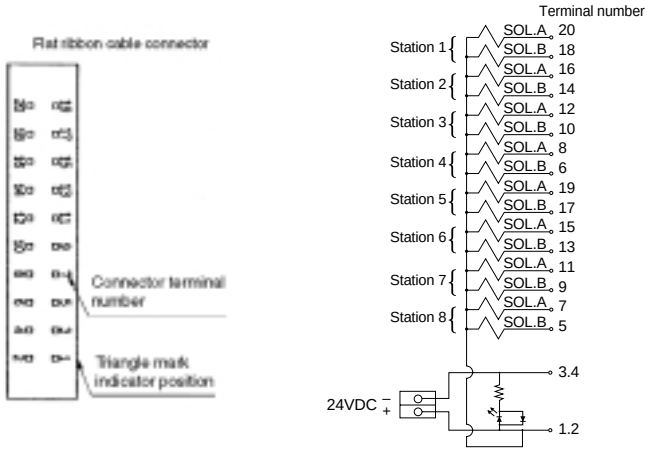

Note 1) A maximum of 16 manifold stations and 16 solenoids can be used. (Contact SMC if more than these quantities are required.)

Note 2) Valves are numbered from the D side regardless of the mounting position of the connector.

(Refer to the separate catalog CAT.ES02-20A for details regarding the PC wiring system.)

Wiring of Plug-in Type SS5Y□-45□

Series SY plug-in type manifolds are equipped with a power terminal as standard. The power terminal enables power supply to valves from either the controller side or manifold side. Refer to wiring examples below for either connection.

1. Wiring example with manifold power terminal

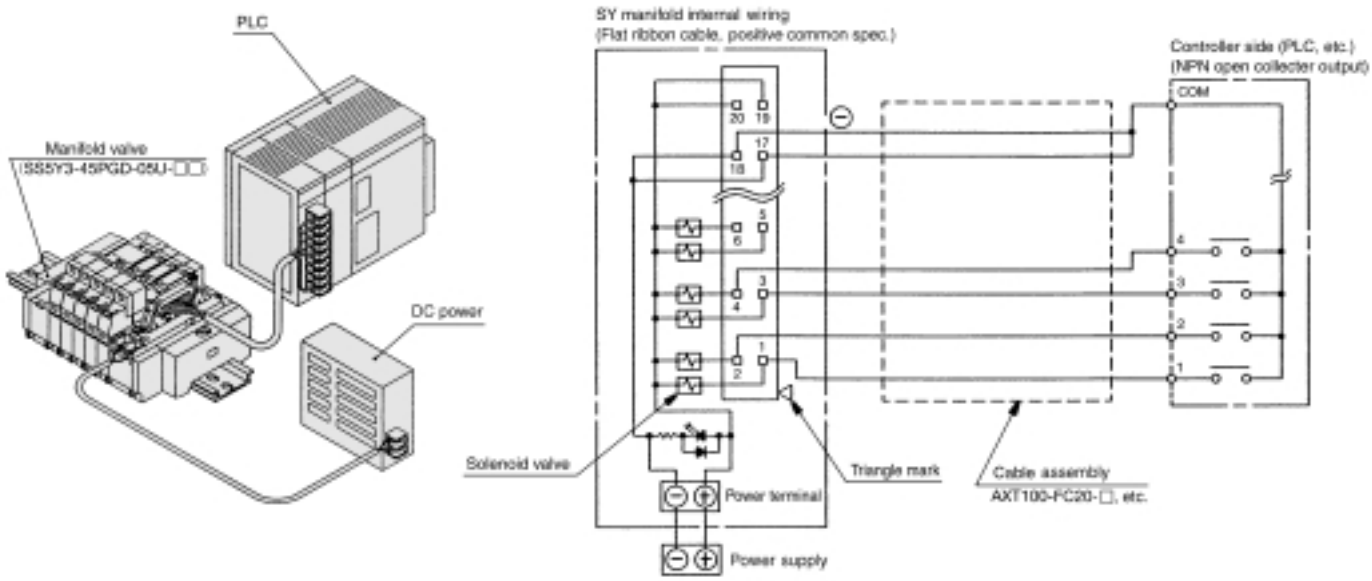

2. Wiring example without manifold power terminal (Power supplied to the controller side or to the wiring, etc.)

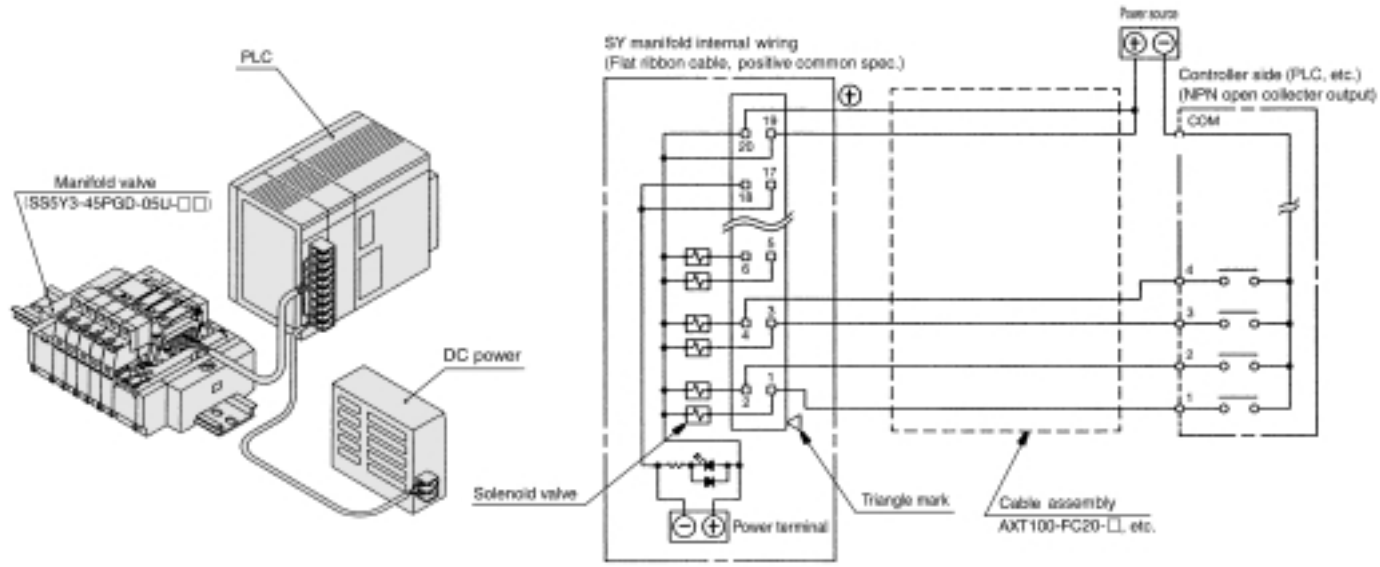

⚠ Caution

When connecting to a PLC, etc., the connection method for the signal lines and COM positions are different for each manufacturer. Carefully study the electrical circuits in in each catalog before connecting. Incorrect connection may cause malfunction in the PLC (control side) and power supply, etc., as well as in manifolds and valves.

SY3000: D-sub Connector Type/Plug-in CAD

SS5Y3-45FU-Stations D - C4/C6

Scale: 30%

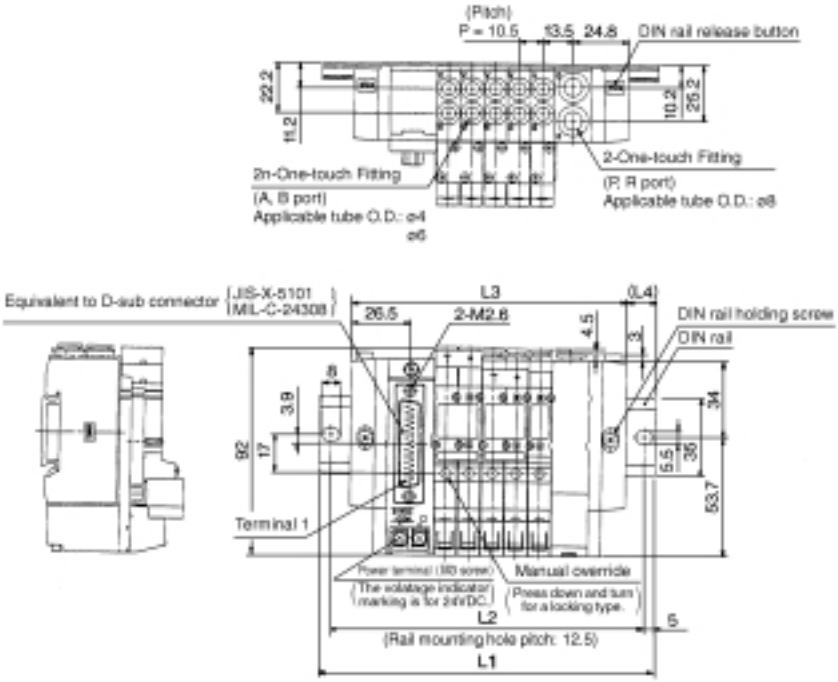

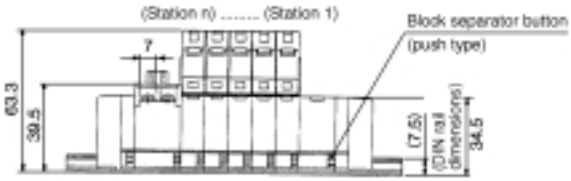

Note) Dimensions L1 to L4 of SS5Y3-45FU-Stations U-C4/C6 are the same as SS5Y3-45FU-Stations D-C4/C6.

Stations n	2	3	4	5	6	7	8	9	10
L1	123	135.5	148	148	160.5	173	185.5	198	210.5
L2	112.5	125	137.5	137.5	150	162.5	175	187.5	200
L3	91.5	102	112.5	123	133.5	144	154.5	165	175.5
L4	15.5	16.5	17.5	12.5	13.5	14.5	15.5	16.5	17.5

SS5Y3-45FU-Stations B-C4/C6

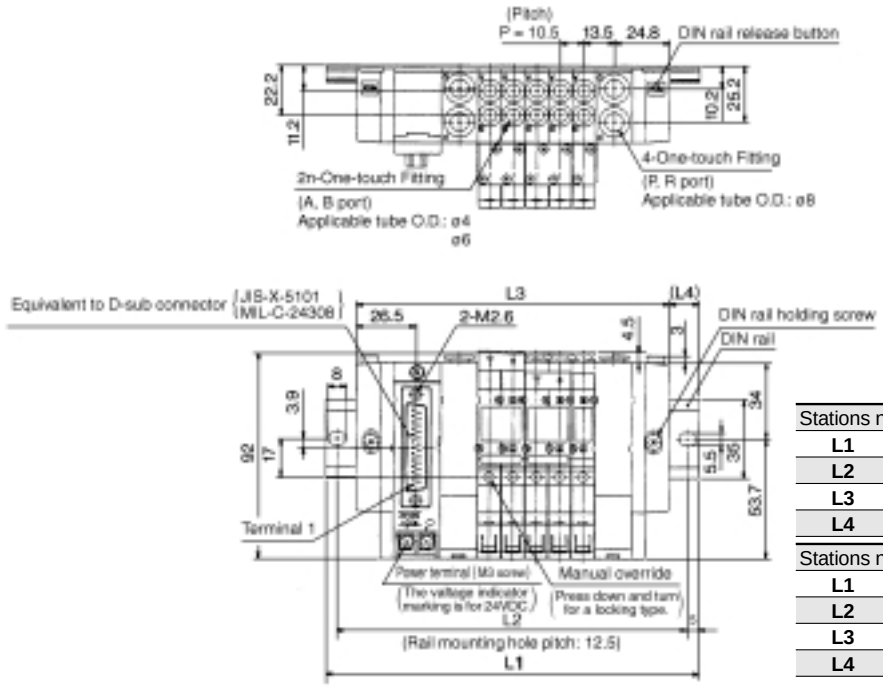

Stations n	2	3	4	5	6	7	8	9	10
L1	135.5	148	160.5	173	185.5	185.5	198	210.5	223
L2	125	137.5	150	162.5	175	175	187.5	200	212.5
L3	108	118.5	129	139.5	150	160.5	171	181.5	192
L4	13.5	14.5	15.5	16.5	17.5	12.5	13.5	14.5	15.5

Stations n	11	12	13	14	15	16	17	18	19	20
L1	235.5	248	248	260.5	273	285.5	298	310.5	310.5	323
L2	225	237.5	237.5	250	262.5	275	287.5	300	300	312.5
L3	202.5	213	223.5	234	244.5	255	265.5	276	286.5	297
L4	16.5	17.5	12	13	14	15	16	17	12	13

CAD
SS5Y3-45FU-□D ..... SS5Y34, #1 (#1 + #5 + #6 + #7 + #17)
SS5Y3-45FU-□B ..... SS5Y34, #2 (#2 + #6 + #7 + #18)

SS5Y3-45FD-Stations U-$^{C4}_{C6}$

Scale: 30%

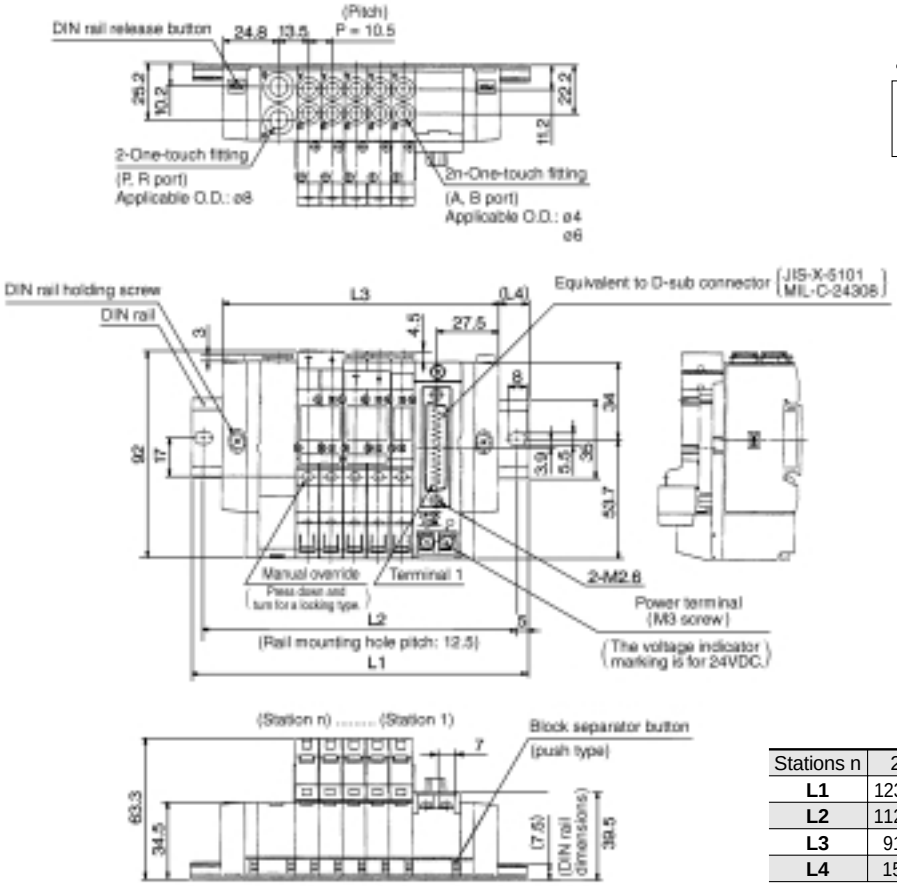

Note) Dimensions L1 to L4 of SS5Y3-45FD-Stations D-$^{C4}_{C6}$ are the same as SS5Y3-45FD-Stations U-$^{C4}_{C6}$.

Stations n	2	3	4	5	6	7	8	9	10
L1	123	135.5	148	148	160.5	173	185.5	198	210.5
L2	112.5	125	137.5	137.5	150	162.5	175	187.5	200
L3	91.5	102	112.5	123	133.5	144	154.5	165	175.5
L4	15.5	16.5	17.5	12.5	13.5	14.5	15.5	16.5	17.5

SS5Y3-45FD-Stations B-$^{C4}_{C6}$

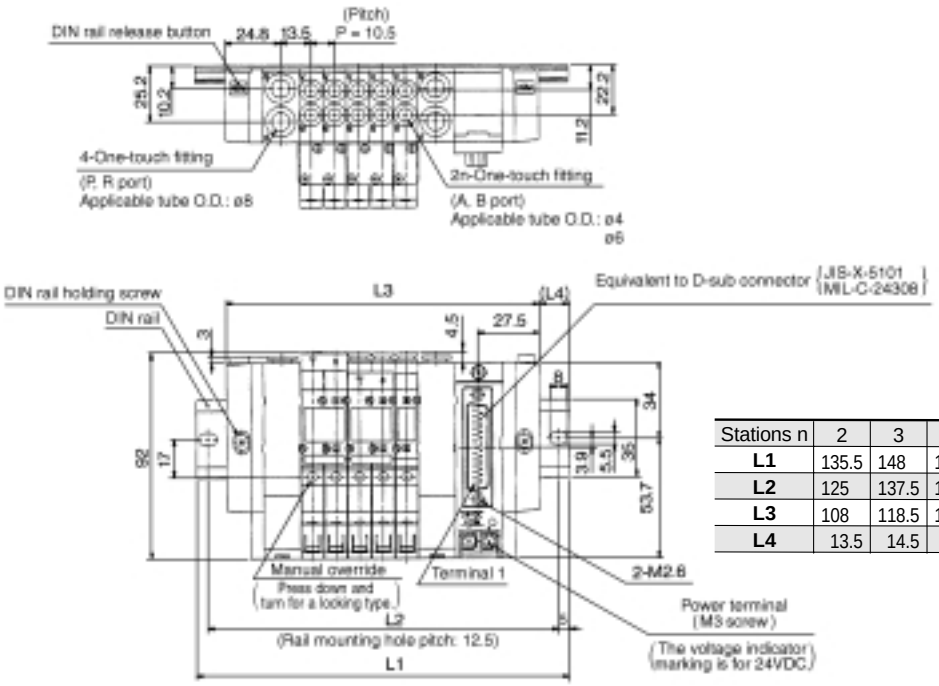

Stations n	2	3	4	5	6	7	8	9	10
L1	135.5	148	160.5	173	185.5	185.5	198	210.5	223
L2	125	137.5	150	162.5	175	175	187.5	200	212.5
L3	108	118.5	129	139.5	150	160.5	171	181.5	192
L4	13.5	14.5	15.5	16.5	17.5	12.5	13.5	14.5	15.5

Stations n	11	12	13	14	15	16	17	18	19	20
L1	235.5	248	248	260.5	273	285.5	298	310.5	310.5	323
L2	225	237.5	237.5	250	262.5	275	287.5	300	300	312.5
L3	202.5	213	223.5	234	244.5	255	265.5	276	286.5	297
L4	16.5	17.5	12	13	14	15	16	17	12	13

CAD

SS5Y3-45FD-□U ..... SS5Y34, #3 (#3 + #6 + #7 + #19)
SS5Y3-45FD-□B ..... SS5Y34, #4 (#4 + #6 + #7 + #20)

SY5000: D-sub Connector Type/Plug-in

SS5Y5-45FU-Stations D-C4/C6/C8

Scale: 30%

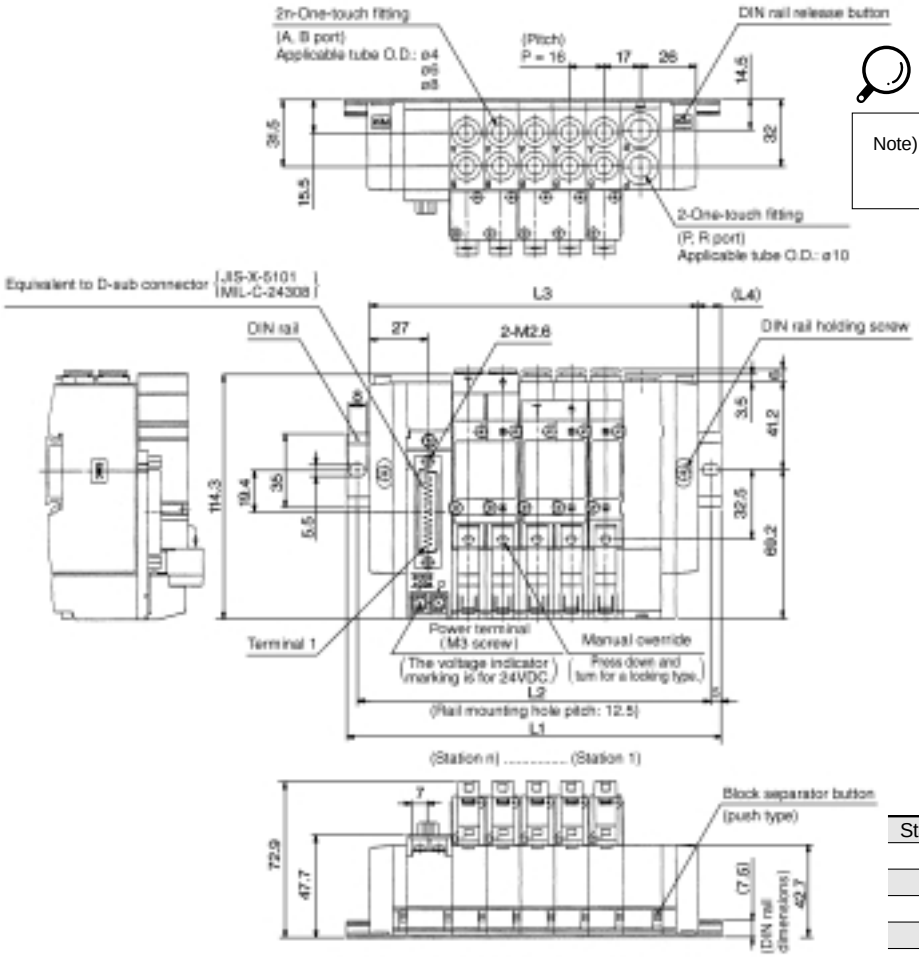

Note) Dimensions L1 to L4 of SS5Y5-45FU-Stations U-C4/C6/C8 are the same as SS5Y5-45FU-Stations D-C4/C6/C8.

Stations n	2	3	4	5	6	7	8	9	10
L1	135.5	148	160.5	185.5	198	210.5	235.5	248	260.5
L2	125	137.5	150	175	187.5	200	225	237.5	250
L3	105	121	137	153	169	185	201	217	233
L4	15	13.5	11.5	16	14.5	12.5	17	15.5	13.5

SS5Y5-45FU-Stations B-C4/C6/C8

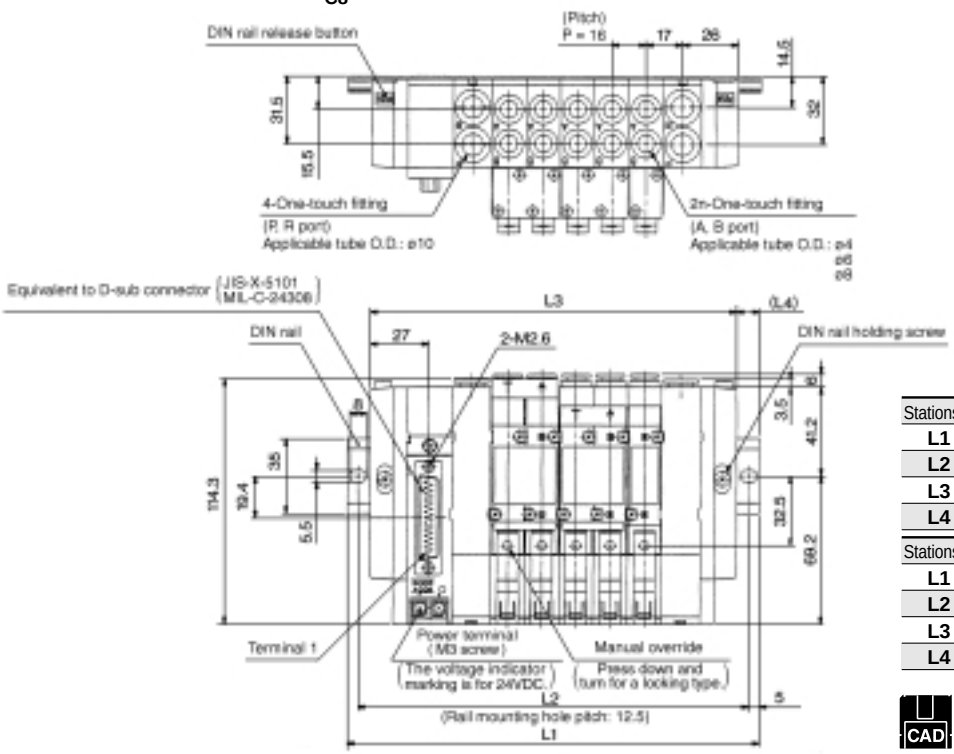

Stations n	2	3	4	5	6	7	8	9	10
L1	148	173	185.5	198	210.5	235.5	248	260.5	285.5
L2	137.5	162.5	175	187.5	200	225	237.5	250	275
L3	123	139	155	171	187	203	219	235	251
L4	12.5	17	15	13.5	11.5	16	14.5	12.5	17

Stations n	11	12	13	14	15	16	17	18	19	20
L1	298	310.5	323	348	360.5	373	398	410.5	423	435.5
L2	287.5	300	312.5	337.5	350	362.5	387.5	400	412.5	425
L3	267	283	299	315	331	347	363	379	395	411
L4	15.5	13.5	12	16.5	14.5	13	17.5	15.5	14	12

CAD
SS5Y5-45FU-□D ..... SS5Y54, #1 (#1 + #6 + #7 + #8 + #18)
SS5Y5-45FU-□B ..... SS5Y54, #2 (#2 + #6 + #7 + #8 + #19)

SS5Y5-45FD-Stations U-C4/C6/C8

Scale: 30%

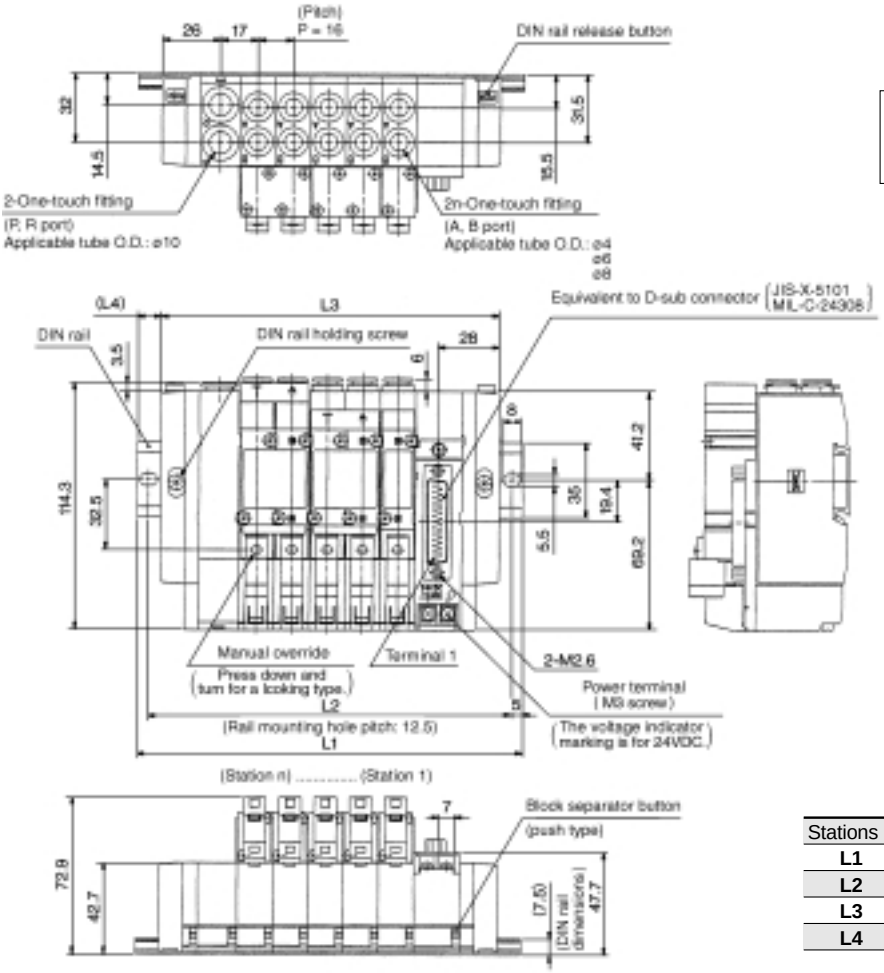

Note) Dimensions L1 to L4 of SS5Y5-45FD-Stations D-C4/C6/C8 are the same as SS5Y5-45FD-Stations U-C4/C6/C8.

Stations n	2	3	4	5	6	7	8	9	10
L1	135.5	148	160.5	185.5	198	210.5	235.5	248	260.5
L2	125	137.5	150	175	187.5	200	225	237.5	250
L3	105	121	137	153	169	185	201	217	233
L4	15	13.5	11.5	16	14.5	12.5	17	15.5	13.5

SS5Y5-45FD-Stations B-C4/C6/C8

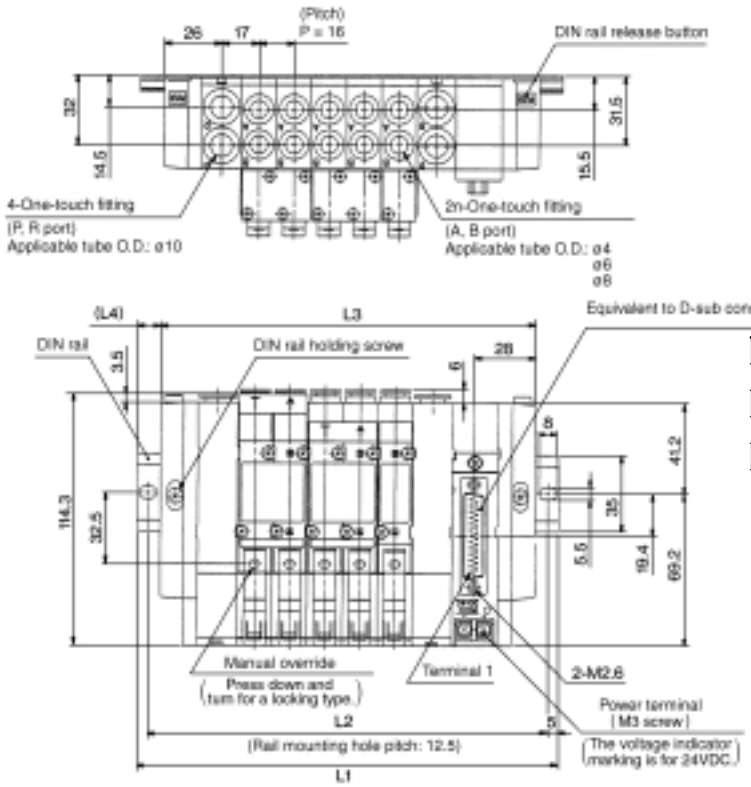

Stations n	2	3	4	5	6	7	8	9	10
L1	148	173	185.5	198	210.5	235.5	248	260.5	285.5
L2	137.5	162.5	175	187.5	200	225	237.5	250	275
L3	123	139	155	171	187	203	219	235	251
L4	12.5	17	15	13.5	11.5	16	14.5	12.5	17

Stations n	11	12	13	14	15	16	17	18	19	20
L1	298	310.5	323	348	360.5	373	398	410.5	423	435.5
L2	287.5	300	312.5	337.5	350	362.5	387.5	400	412.5	425
L3	267	283	299	315	331	347	363	379	395	411
L4	15.5	13.5	12	16.5	14.5	13	17.5	15.5	14	12

CAD
SS5Y5-45FD-□U ..... SS5Y54, #3 (#3 + #6 + #7 + #8 + #20)
SS5Y5-45FD-□B ..... SS5Y54, #4 (#4 + #6 + #7 + #8 + #21)

SY3000: Flat Ribbon Cable Type/Plug-in

SS5Y3-45PU-Stations D-$^{C4}_{C6}$ (26 pins)

Scale: 30%

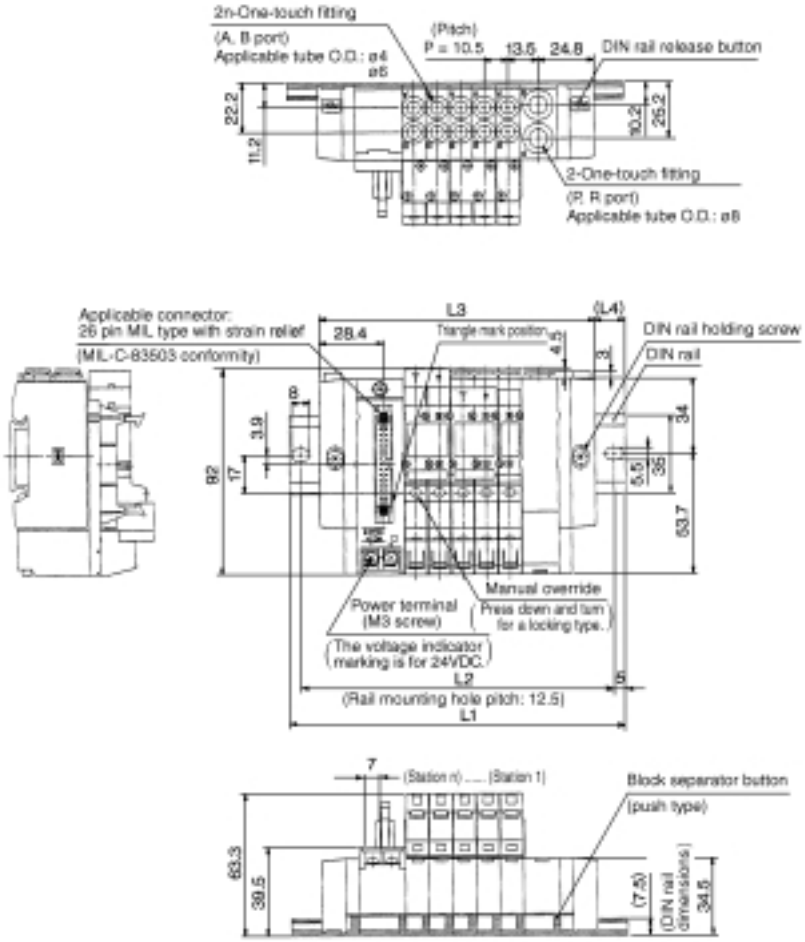

Note) Dimensions L1 to L4 of SS5Y3-45P□U-Stations U-$^{C4}_{C6}$ are the same as SS5Y3-45P□U-Stations D-$^{C4}_{C6}$.

Scale: 35%

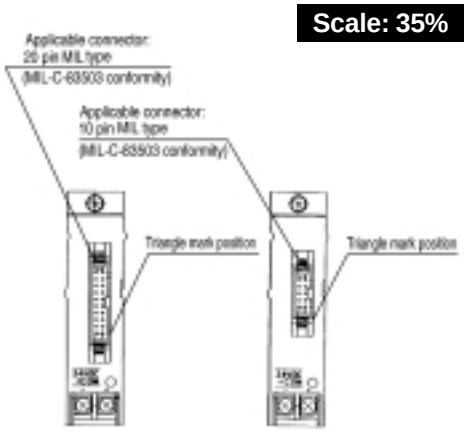

For 45PG (20 pins) **For 45PH (10 pins)**

Stations n	2	3	4	5	6	7	8	9	10
L1	123	135.5	148	148	160.5	173	185.5	198	210.5
L2	112.5	125	137.5	137.5	150	162.5	175	187.5	200
L3	91.5	102	112.5	123	133.5	144	154.5	165	175.5
L4	15.5	16.5	17.5	12.5	13.5	14.5	15.5	16.5	17.5

SS5Y3-45PU-Stations B-$^{C4}_{C6}$ (26 pins)

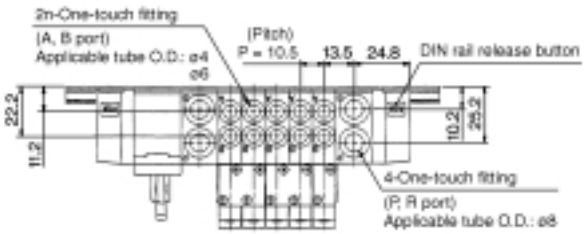

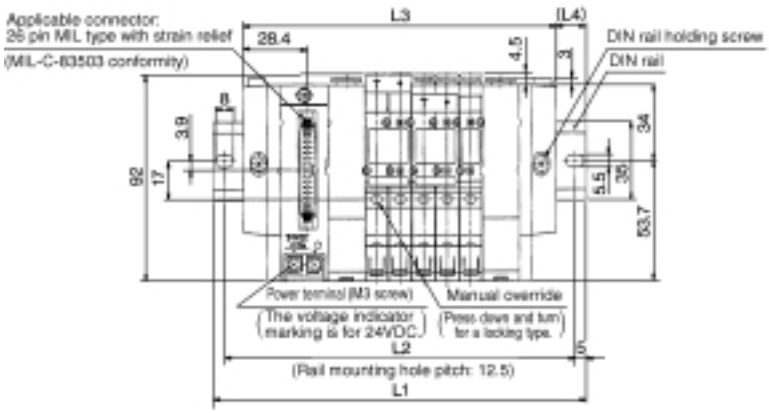

Stations n	2	3	4	5	6	7	8	9	10
L1	135.5	148	160.5	173	185.5	185.5	198	210.5	223
L2	125	137.5	150	162.5	175	175	187.5	200	212.5
L3	108	118.5	129	139.5	150	160.5	171	181.5	192
L4	13.5	14.5	15.5	16.5	17.5	12.5	13.5	14.5	15.5

Stations n	11	12	13	14	15	16	17	18	19	20
L1	235.5	248	248	260.5	273	285.5	298	310.5	310.5	323
L2	225	237.5	237.5	250	262.5	275	287.5	300	300	312.5
L3	202.5	213	223.5	234	244.5	255	265.5	276	286.5	297
L4	16.5	17.5	12	13	14	15	16	17	12	13

SS5Y3-45PD-Stations U-$^{C4}_{C6}$ (26 pins)

Scale: 30%

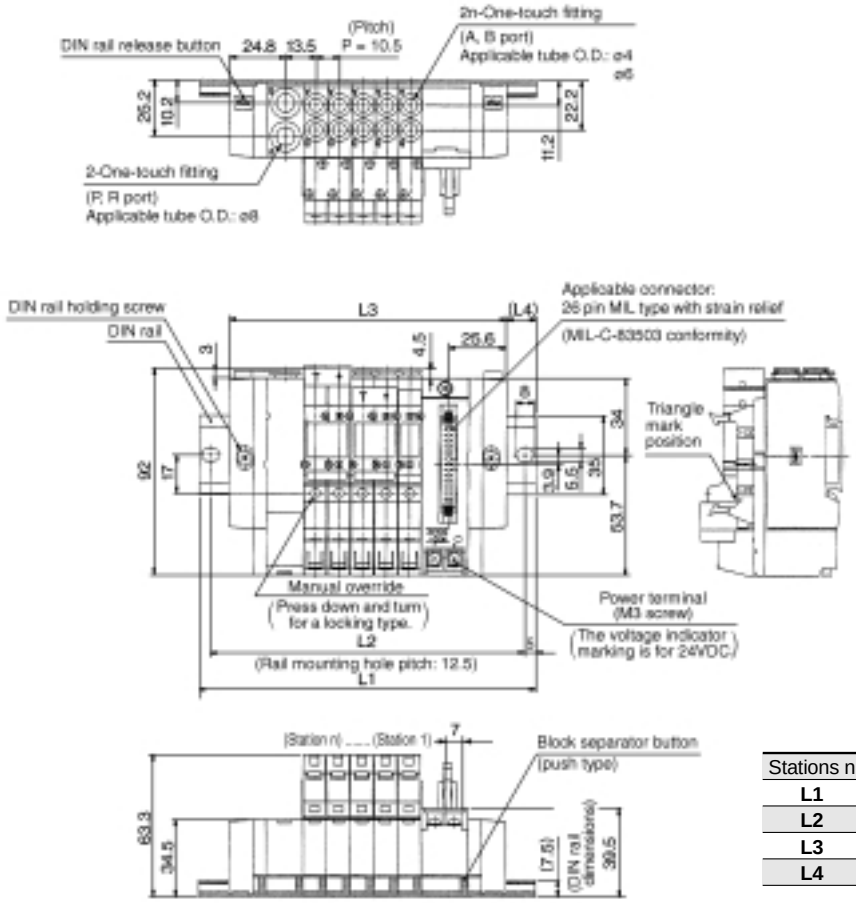

Note) Dimensions L1 to L4 of SS5Y3-45P□D-Stations D-$^{C4}_{C6}$ are the same as SS5Y3-45P□D-Stations U-$^{C4}_{C6}$.

Stations n	2	3	4	5	6	7	8	9	10
L1	123	135.5	148	148	160.5	173	185.5	198	210.5
L2	112.5	125	137.5	137.5	150	162.5	175	187.5	200
L3	91.5	102	112.5	123	133.5	144	154.5	165	175.5
L4	15.5	16.5	17.5	12.5	13.5	14.5	15.5	16.5	17.5

SS5Y3-45PD-Stations B-$^{C4}_{C6}$ (26 pins)

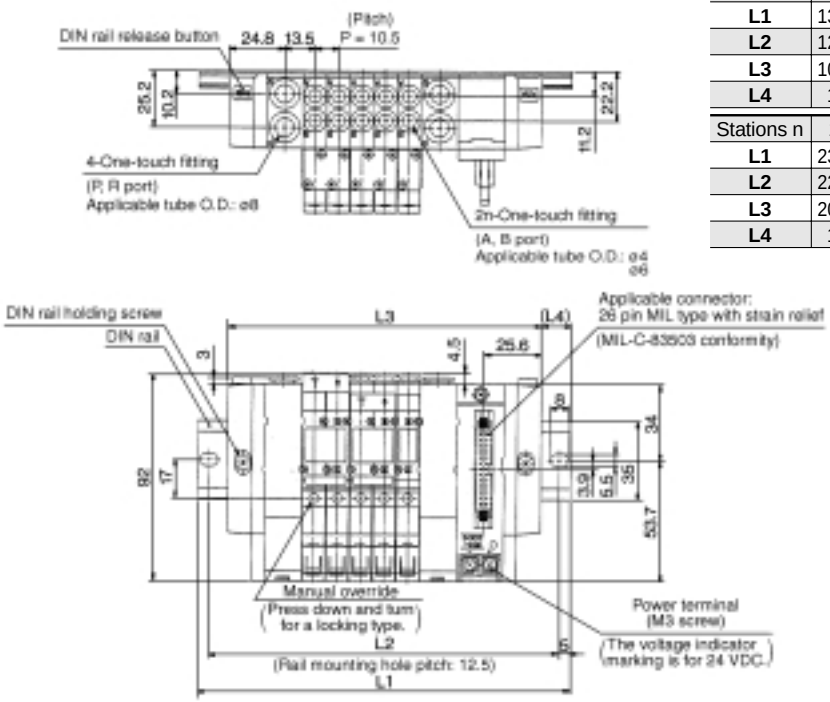

Stations n	2	3	4	5	6	7	8	9	10
L1	135.5	148	160.5	173	185.5	185.5	198	210.5	223
L2	125	137.5	150	162.5	175	175	187.5	200	212.5
L3	108	118.5	129	139.5	150	160.5	171	181.5	192
L4	13.5	14.5	15.5	16.5	17.5	12.5	13.5	14.5	15.5

Stations n	11	12	13	14	15	16	17	18	19	20
L1	235.5	248	248	260.5	273	285.5	298	310.5	310.5	323
L2	225	237.5	237.5	250	262.5	275	287.5	300	300	312.5
L3	202.5	213	223.5	234	244.5	255	265.5	276	286.5	297
L4	16.5	17.5	12	13	14	15	16	17	12	13

SY5000: Flat Ribbon Cable Type/Plug-in

SS5Y5-45PU-Stations D-C4/C6/C8 (26 pins)

Scale: 30%

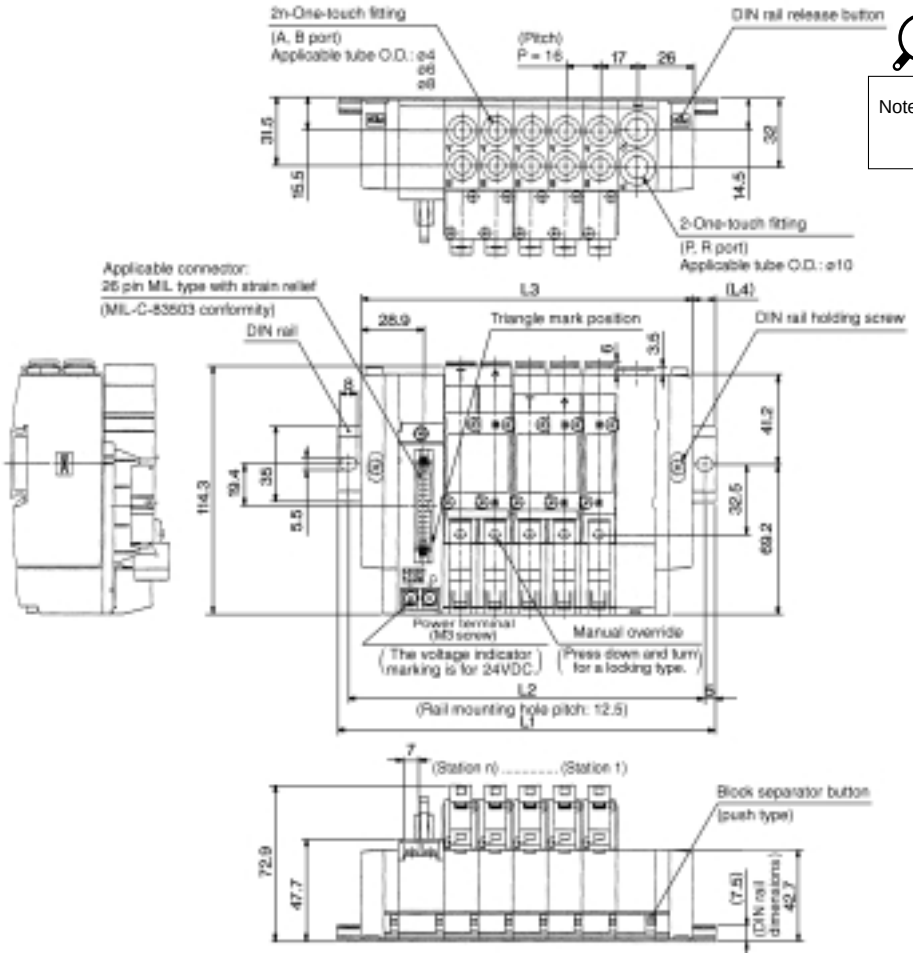

Note) Dimensions L1 to L4 of SS5Y5-45P□U-Stations U-C4/C6/C8 are the same as SS5Y5-45P□U-Stations D-C4/C6/C8.

Scale: 35%

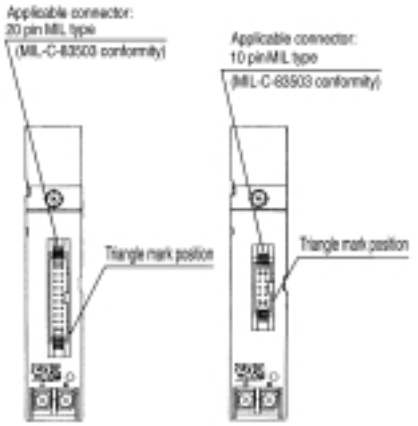

For 45PG (20 pins) **For 45PH (10 pins)**

Stations n	2	3	4	5	6	7	8	9	10
L1	135.5	148	160.5	185.5	198	210.5	235.5	248	260.5
L2	125	137.5	150	175	187.5	200	225	237.5	250
L3	105	121	137	153	169	185	201	217	233
L4	15	13.5	11.5	16	14.5	12.5	17	15.5	13.5

SS5Y5-45PU-Stations B-C4/C6/C8 (26 pins)

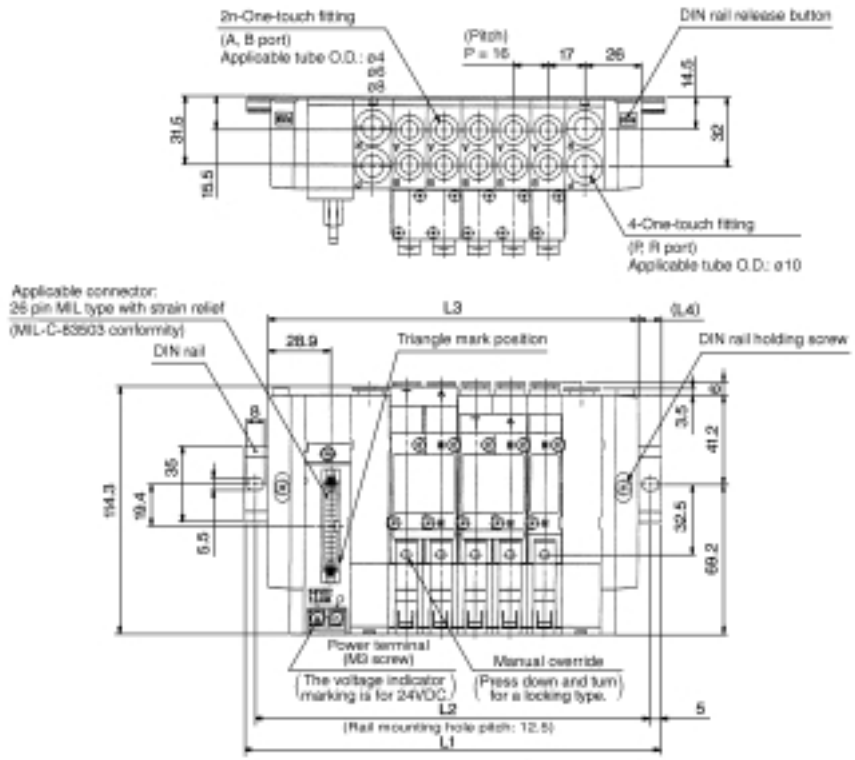

Stations n	2	3	4	5	6	7	8	9	10
L1	148	173	185.5	198	210.5	235.5	248	260.5	285.5
L2	137.5	162.5	175	187.5	200	225	237.5	250	275
L3	123	139	155	171	187	203	219	235	251
L4	12.5	17	15	13.5	11.5	16	14.5	12.5	17

Stations n	11	12	13	14	15	16	17	18	19	20
L1	298	310.5	323	348	360.5	373	398	410.5	423	435.5
L2	287.5	300	312.5	337.5	350	362.5	387.5	400	412.5	425
L3	267	283	299	315	331	347	363	379	395	411
L4	15.5	13.5	12	16.5	14.5	13	17.5	15.5	14	12

SS5Y5-45PD-Stations U-C4/C6/C8 (26 pins)

Scale: 30%

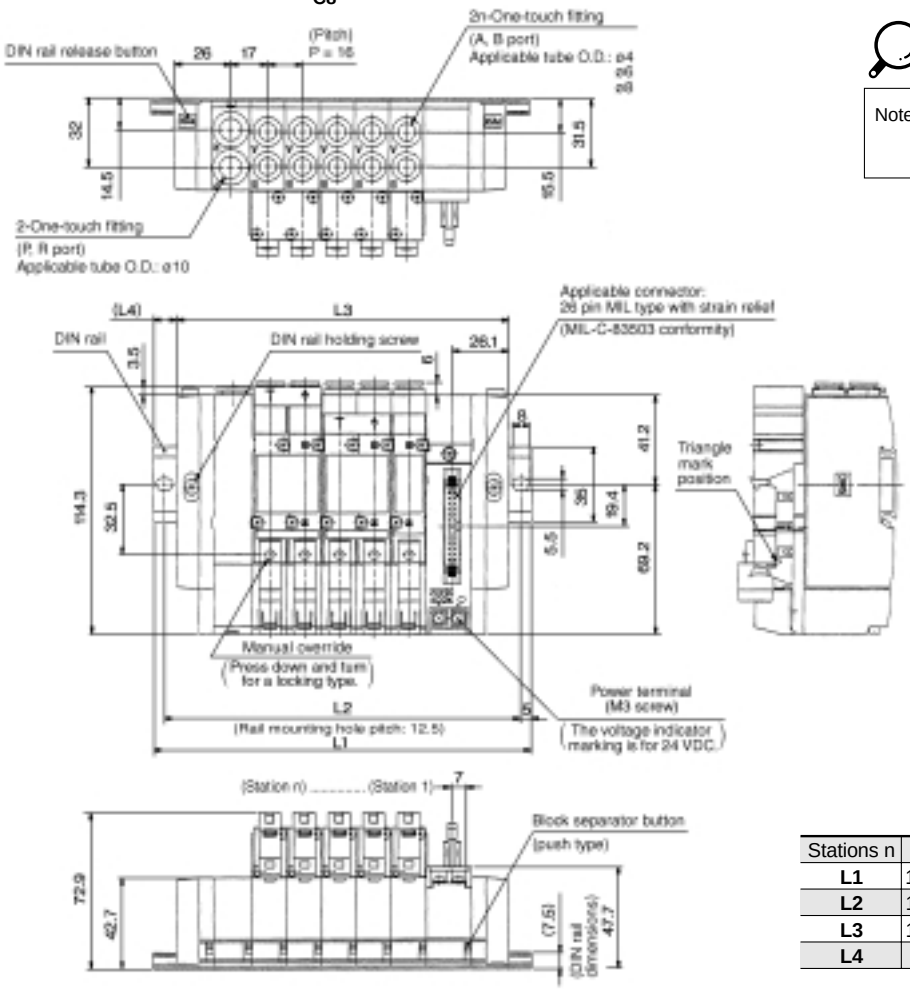

Note) Dimensions L1 to L4 of SS5Y5-45P□D-Stations D-C4/C6/C8 are the same as SS5Y5-45P□D-Stations U-C4/C6/C8.

Stations n	2	3	4	5	6	7	8	9	10
L1	135.5	148	160.5	185.5	198	210.5	235.5	248	260.5
L2	125	137.5	150	175	187.5	200	225	237.5	250
L3	105	121	137	153	169	185	201	217	233
L4	15	13.5	11.5	16	14.5	12.5	17	15.5	13.5

SS5Y5-45PD-Stations B-C4/C6/C8 (26 pins)

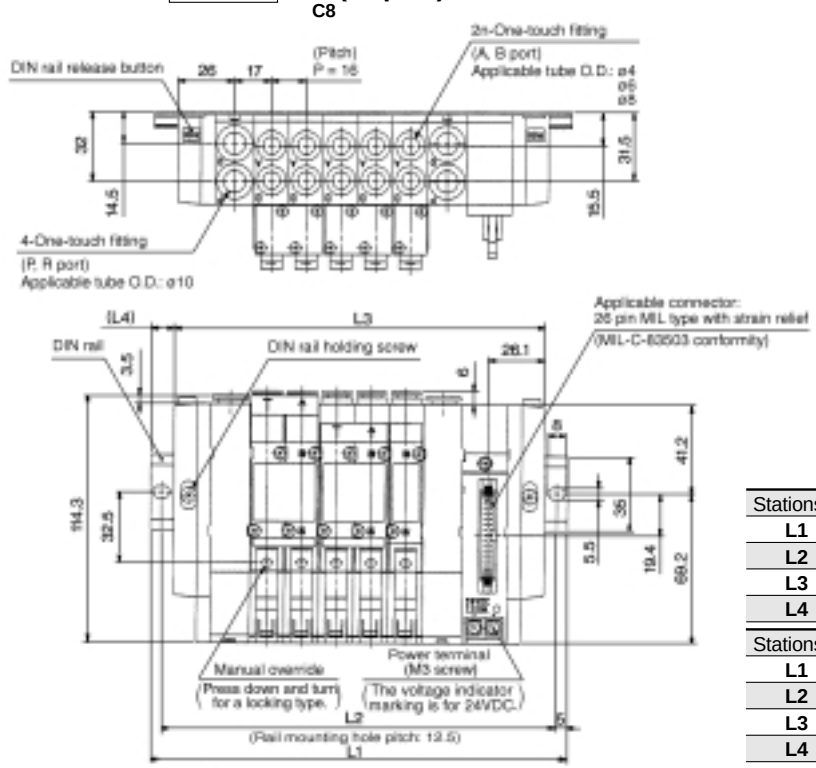

Stations n	2	3	4	5	6	7	8	9	10
L1	148	173	185.5	198	210.5	235.5	248	260.5	285.5
L2	137.5	162.5	175	187.5	200	225	237.5	250	275
L3	123	139	155	171	187	203	219	235	251
L4	12.5	17	15	13.5	11.5	16	14.5	12.5	17

Stations n	11	12	13	14	15	16	17	18	19	20
L1	298	310.5	323	348	360.5	373	398	410.5	423	435.5
L2	287.5	300	312.5	337.5	350	362.5	387.5	400	412.5	425
L3	267	283	299	315	331	347	363	379	395	411
L4	15.5	13.5	12	16.5	14.5	13	17.5	15.5	14	12

SY3000: Terminal Block 9 Pin Type/Plug-in

SS5Y3-45TU-Stations D-$^{C4}_{C6}$ (9 pins)

Scale: 30%

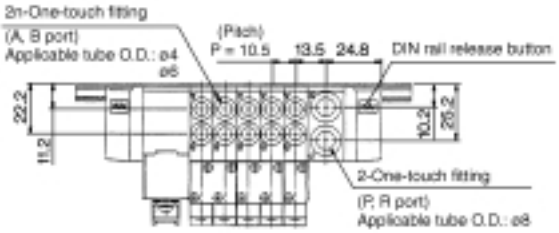

Note) Dimensions L1 to L4 of
SS5Y3-45TU-Stations U-$^{C4}_{C6}$,
SS5Y3-45TD-Stations U-$^{C4}_{C6}$, and
SS5Y3-45TD-Stations D-$^{C4}_{C6}$
are the same as SS5Y3-45TU-Stations D-$^{C4}_{C6}$.

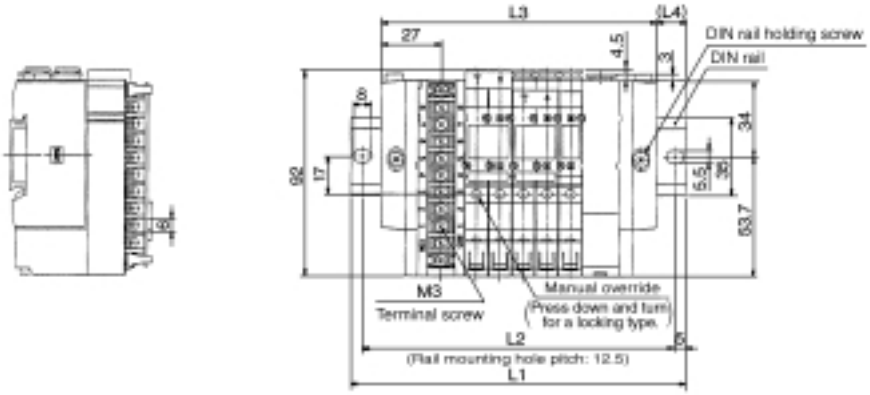

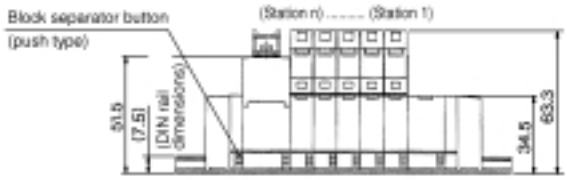

Stations n	2	3	4	5	6	7	8
L1	123	135.5	148	148	160.5	173	185.5
L2	112.5	125	137.5	137.5	150	162.5	175
L3	91.5	102	112.5	123	133.5	144	154.5
L4	15.5	16.5	17.5	12.5	13.5	14.5	15.5

SS5Y3-45TU-Stations B-$^{C4}_{C6}$ (9 pins)

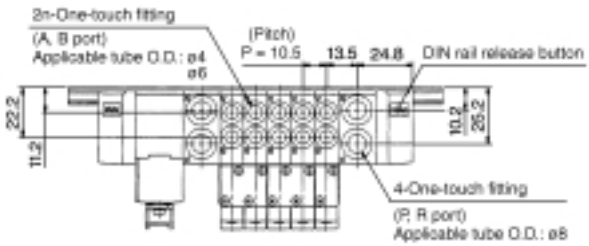

Note) Dimensions L1 to L4 of SS5Y3-45TD-Stations B-$^{C4}_{C6}$ are the same as SS5Y3-45TU-Stations B-$^{C4}_{C6}$.

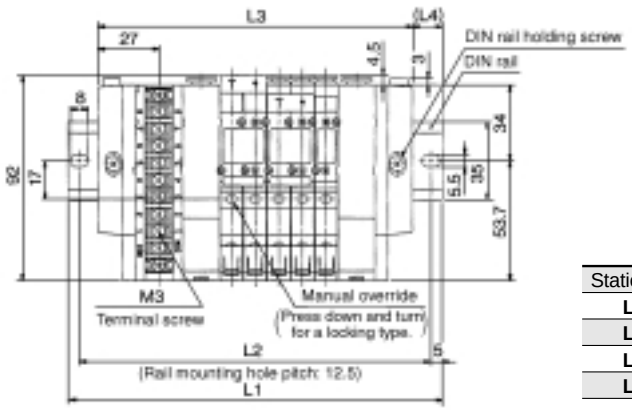

Stations n	2	3	4	5	6	7	8
L1	135.5	148	160.5	173	185.5	185.5	198
L2	125	137.5	150	162.5	175	175	187.5
L3	108	118.5	129	139.5	150	160.5	171
L4	13.5	14.5	15.5	16.5	17.5	12.5	13.5

SY5000: Terminal Block 9 Pin Type/Plug-in

SS5Y5-45TU-Stations D-C4/C6/C8 (9 pins)

Scale: 30%

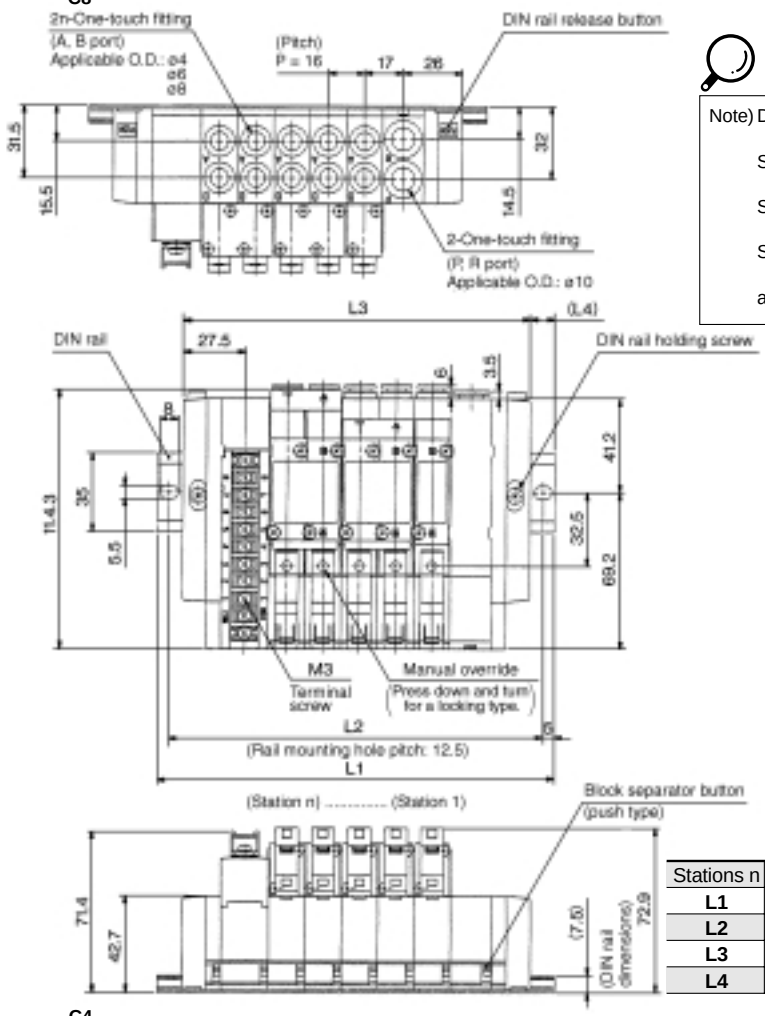

Note) Dimensions L1 to L4 of

SS5Y5-45TU-Stations U-C4/C6/C8,

SS5Y5-45TD-Stations U-C4/C6/C8, and

SS5Y5-45TD-Stations D-C4/C6/C8

are the same as SS5Y5-45TU-Stations D-C4/C6/C8.

Stations n	2	3	4	5	6	7	8
L1	135.5	148	160.5	185.5	198	210.5	235.5
L2	125	137.5	150	175	187.5	200	225
L3	105	121	137	153	169	185	201
L4	15	13.5	11.5	16	14.5	12.5	17

SS5Y5-45TU-Stations B-C4/C6/C8 (9 pins)

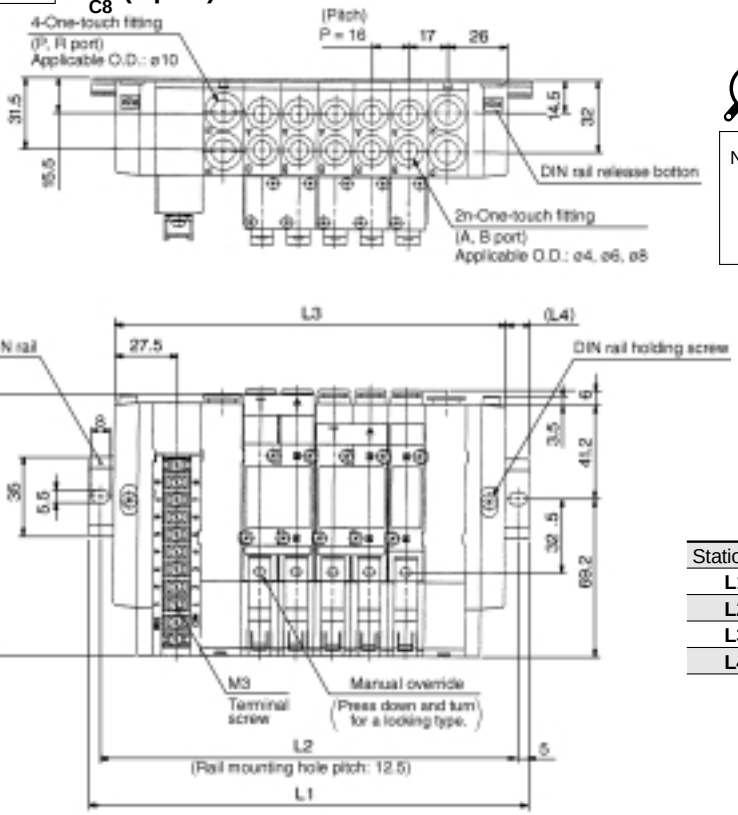

Note) Dimensions L1 to L4 of SS5Y5-45TD-Stations B-C4/C6/C8 are the same as SS5Y5-45TU-Stations B-C4/C6/C8.

Stations n	2	3	4	5	6	7	8
L1	148	173	185.5	198	210.5	235.5	248
L2	137.5	162.5	175	187.5	200	225	237.5
L3	123	139	155	171	187	203	219
L4	12.5	17	15	13.5	11.5	16	14.5

SY3000: Terminal Block 18 Pin Type/Plug-in

SS5Y3-45T1U-Stations D-$^{C4}_{C6}$ (18 pins)

Scale: 30%

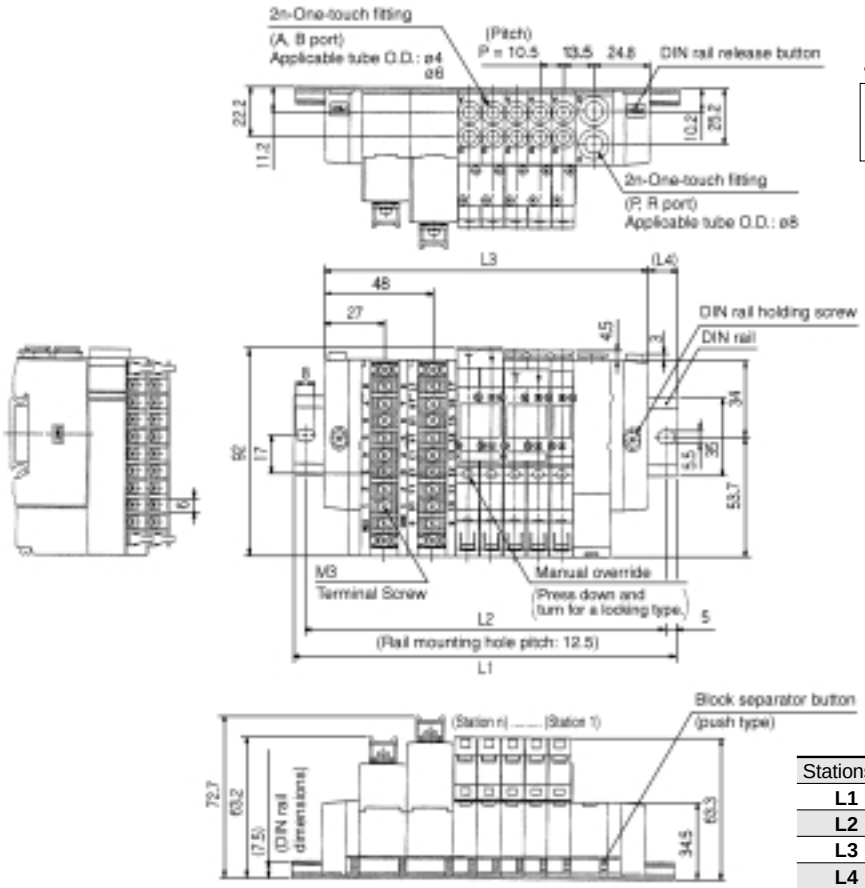

Note) Dimensions L1 to L4 of SS5Y3-45T1U-Stations U-$^{C4}_{C6}$ are the same as SS5Y3-45T1U-Stations D-$^{C4}_{C6}$.

Stations n	2	3	4	5	6	7	8	9	10
L1	148	148	160.5	173	185.5	198	210.5	210.5	223
L2	137.5	137.5	150	162.5	175	187.5	200	200	212.5
L3	112.5	123	133.5	144	154.5	165	175.5	186	196.5
L4	17.5	12.5	13.5	14.5	15.5	16.5	17.5	12	13

SS5Y3-45T1U-Stations B-$^{C4}_{C6}$ (18 pins)

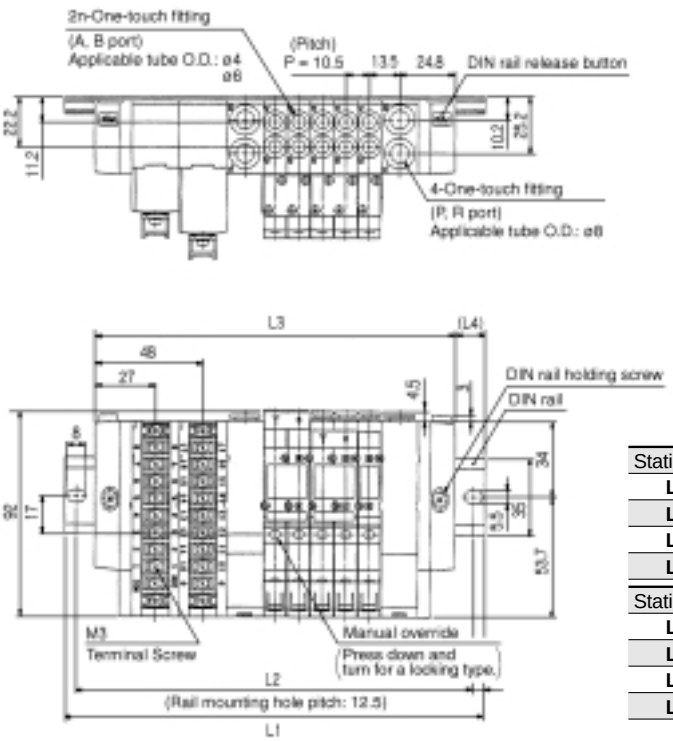

Stations n	2	3	4	5	6	7	8	9
L1	160.5	173	185.5	185.5	198	210.5	223	235.5
L2	150	162.5	175	175	187.5	200	212.5	225
L3	129	139.5	150	160.5	171	181.5	192	202.5
L4	15.5	16.5	17.5	12.5	13.5	14.5	15.5	16.5

Stations n	10	11	12	13	14	15	16	17
L1	248	248	260.5	273	285.5	298	310.5	310.5
L2	237.5	237.5	250	262.5	275	287.5	300	300
L3	213	223.5	234	244.5	255	265.5	276	286.5
L4	17.5	12	13	14	15	16	17	12

SS5Y3-45T1D-Stations U-C4/C6 (18 pins)

Scale: 30%

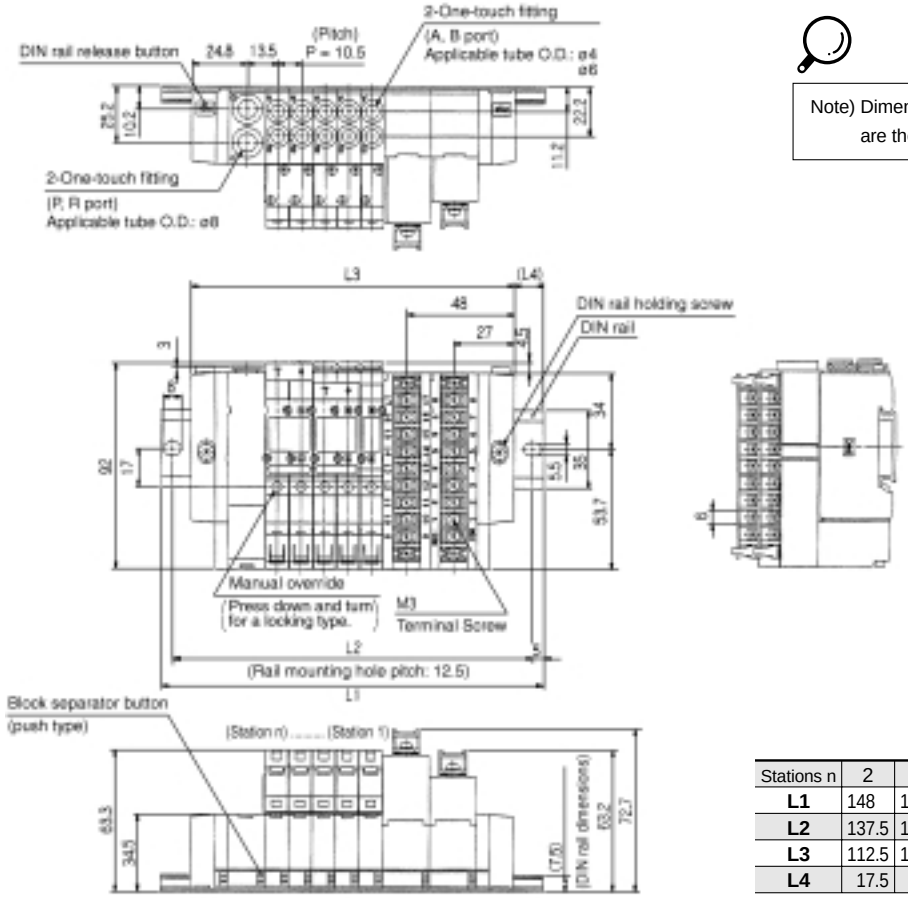

Note) Dimensions L1 to L4 of SS5Y3-45T1D-Stations D-C4/C6 are the same as SS5Y3-45T1D-Stations U-C4/C6.

Stations n	2	3	4	5	6	7	8	9	10
L1	148	148	160.5	173	185.5	198	210.5	210.5	223
L2	137.5	137.5	150	162.5	175	187.5	200	200	212.5
L3	112.5	123	133.5	144	154.5	165	175.5	186	196.5
L4	17.5	12.5	13.5	14.5	15.5	16.5	17.5	12	13

SS5Y3-45T1D-Stations B-C4/C6 (18 pins)

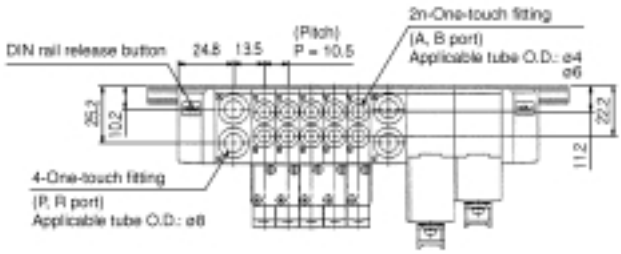

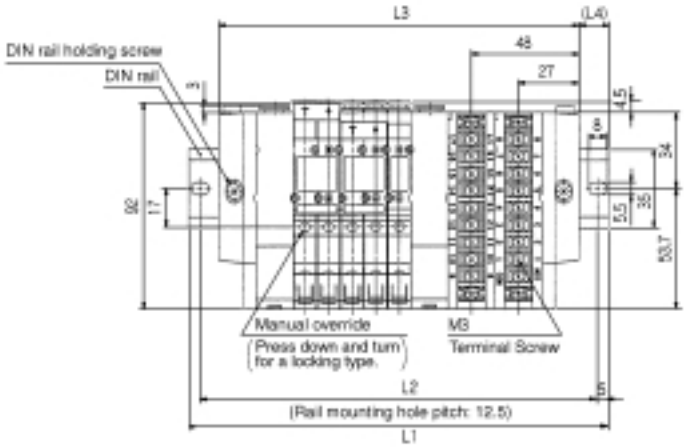

Stations n	2	3	4	5	6	7	8	9
L1	160.5	173	185.5	185.5	198	210.5	223	235.5
L2	150	162.5	175	175	187.5	200	212.5	225
L3	129	139.5	150	160.5	171	181.5	192	202.5
L4	15.5	16.5	17.5	12.5	13.5	14.5	15.5	16.5

Stations n	10	11	12	13	14	15	16	17
L1	248	248	260.5	273	285.5	298	310.5	310.5
L2	237.5	237.5	250	262.5	275	287.5	300	300
L3	213	223.5	234	244.5	255	265.5	276	286.5
L4	17.5	12	13	14	15	16	17	12

SY5000: Terminal Block 18 Pin Type/Plug-in

SS5Y5-45T1U-Stations D-C4/C6/C8 (18 pins)

Scale: 30%

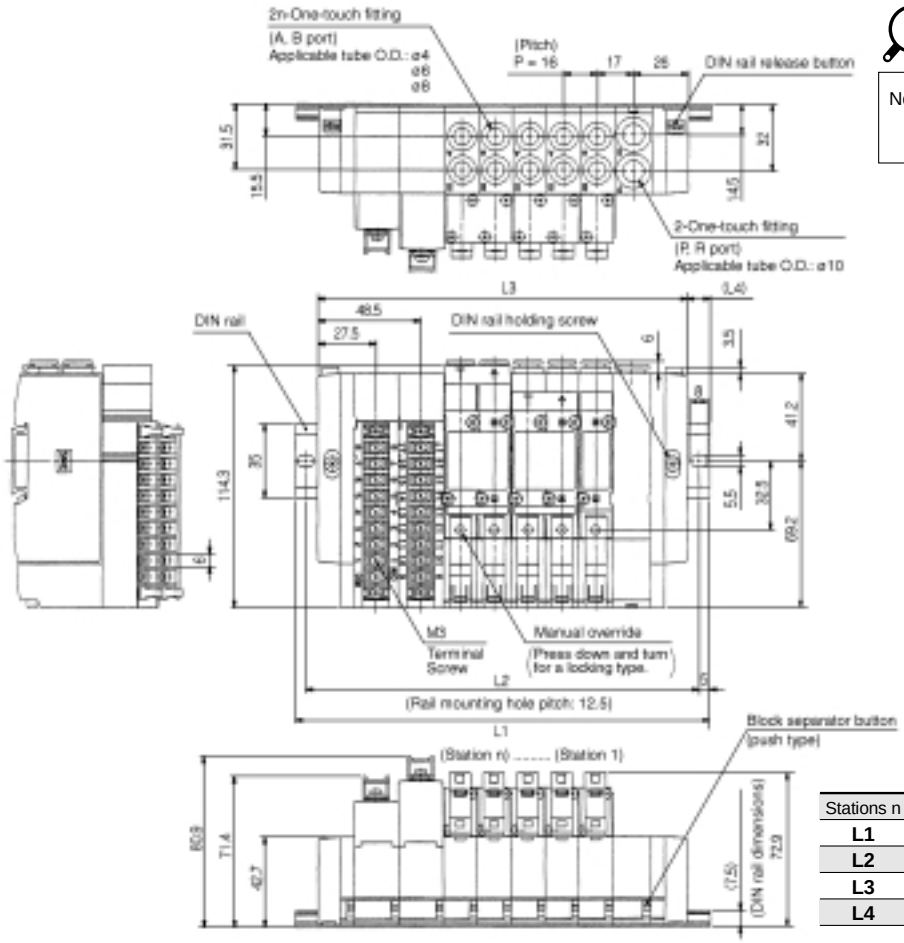

Note) Dimensions L1 to L4 of SS5Y5-45T1U-Stations U-C4/C6/C8 are the same as SS5Y5-45T1U-Stations D-C4/C6/C8.

Stations n	2	3	4	5	6	7	8	9	10
L1	160.5	173	185.5	198	223	235.5	248	273	285.5
L2	150	162.5	175	187.5	212.5	225	237.5	262.5	275
L3	126	142	158	174	190	206	222	238	254
L4	17	15.5	13.5	12	16.5	14.5	13	17.5	15.5

SS5Y5-45T1U-Stations B-C4/C6/C8 (18 pins)

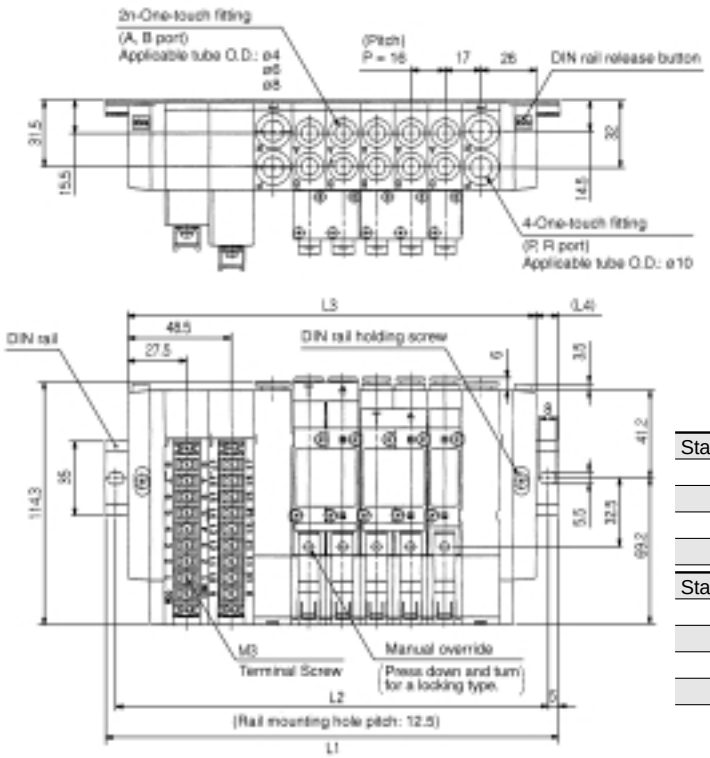

Stations n	2	3	4	5	6	7	8	9
L1	173	185.5	210.5	223	235.5	248	273	285.5
L2	162.5	175	200	212.5	225	237.5	262.5	275
L3	144	160	176	192	208	224	240	256
L4	14.5	12.5	17	15.5	13.5	12	16.5	14.5

Stations n	10	11	12	13	14	15	16	17
L1	298	323	335.5	348	360.5	385.5	398	410.5
L2	287.5	312.5	325	337.5	350	375	387.5	400
L3	272	288	304	320	336	352	368	384
L4	13	17.5	15.5	14	12	16.5	15	13

SS5Y5-45T1D-Stations U-C4/C6/C8 (18 pins)

Scale: 30%

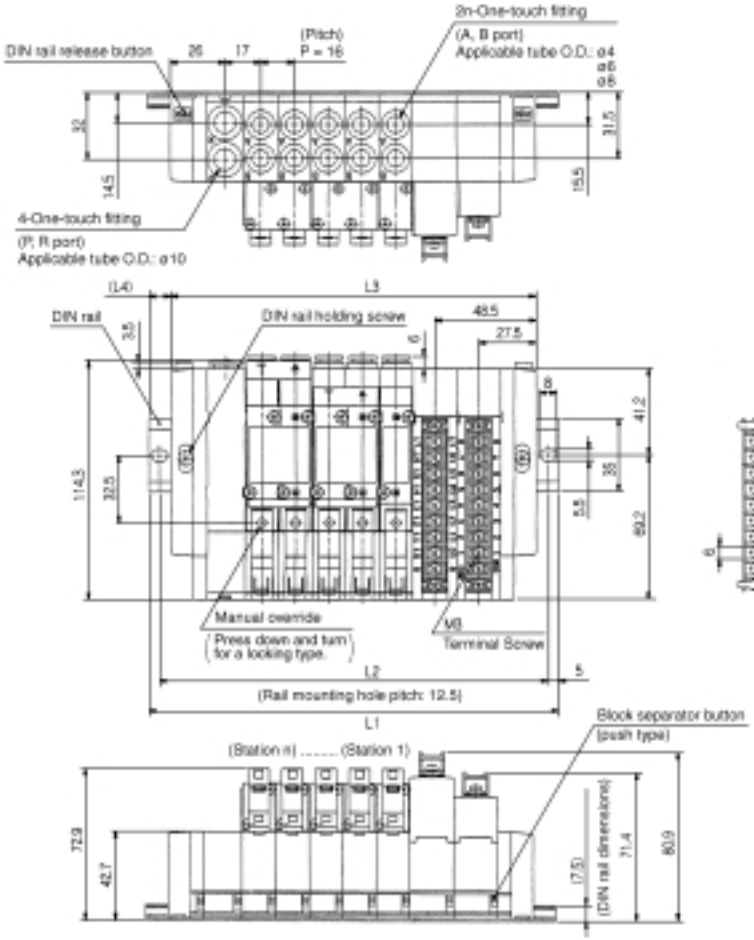

Note) Dimensions L1 to L4 of SS5Y5-45T1D-Stations D-C4/C6/C8 are the same as SS5Y5-45T1D-Stations U-C4/C6/C8.

Stations n	2	3	4	5	6	7	8	9	10
L1	160.5	173	185.5	198	223	235.5	248	273	285.5
L2	150	162.5	175	187.5	212.5	225	237.5	262.5	275
L3	126	142	158	174	190	206	222	238	254
L4	17	15.5	13.5	12	16.5	14.5	13	17.5	15.5

SS5Y5-45T1D-Stations B-C4/C6/C8 (18 pins)

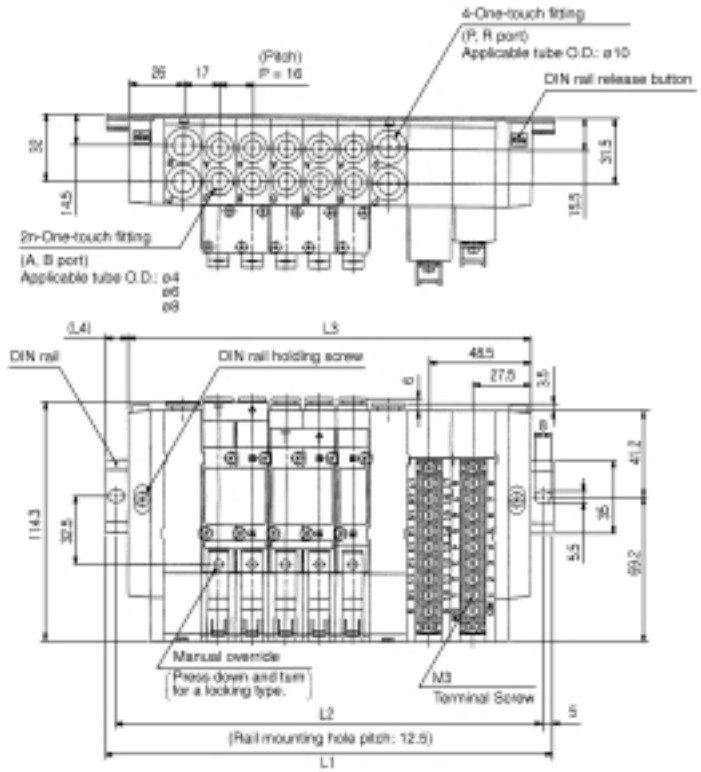

Stations n	2	3	4	5	6	7	8	9
L1	173	185.5	210.5	223	235.5	248	273	285.5
L2	162.5	175	200	212.5	225	237.5	262.5	275
L3	144	160	176	192	208	224	240	256
L4	14.5	12.5	17	15.5	13.5	12	16.5	14.5

Stations n	10	11	12	13	14	15	16	17
L1	298	323	335.5	348	360.5	385.5	398	410.5
L2	287.5	312.5	325	337.5	350	375	387.5	400
L3	272	288	304	320	336	352	368	384
L4	13	17.5	15.5	14	12	16.5	15	13

SY3000: PC Wiring System Compatible (Flat Ribbon Cable Type/Plug-in)

SS5Y3-45GU-Stations D-C4/C6

Scale: 30%

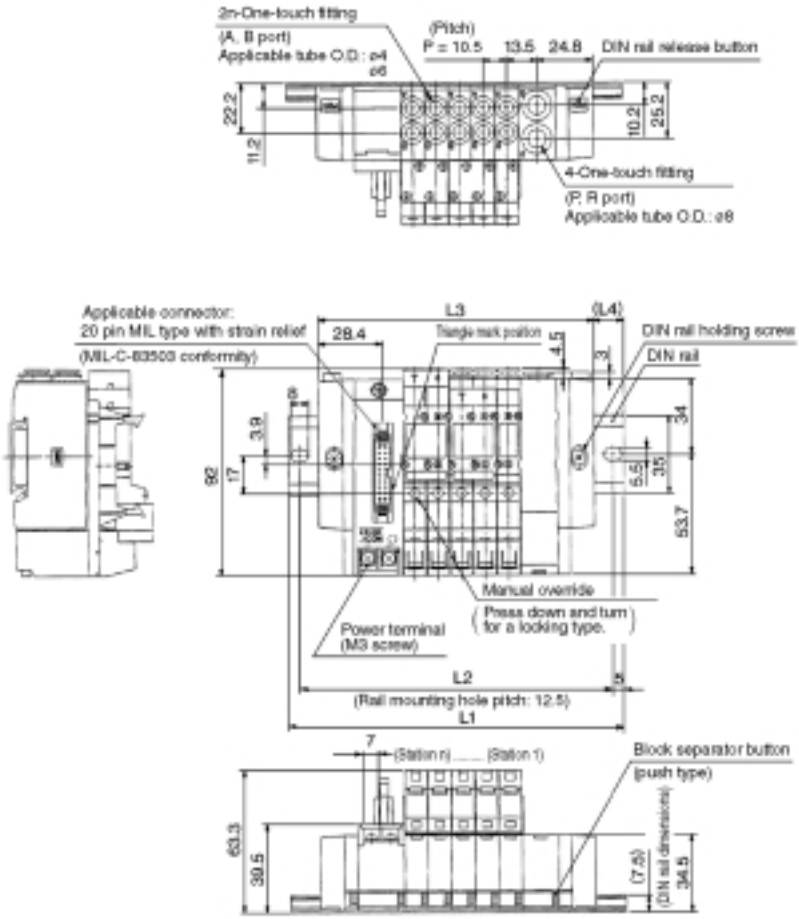

Note) Dimensions L1 to L4 of SS5Y3-45GU-Stations U-C4/C6 are the same as SS5Y3-45GU-Stations D-C4/C6.

Stations n	2	3	4	5	6	7	8	9	10
L1	123	135.5	148	148	160.5	173	185.5	198	210.5
L2	112.5	125	137.5	137.5	150	162.5	175	187.5	200
L3	91.5	102	112.5	123	133.5	144	154.5	165	175.5
L4	15.5	16.5	17.5	12.5	13.5	14.5	15.5	16.5	17.5

SS5Y3-45GU-Stations B-C4/C6

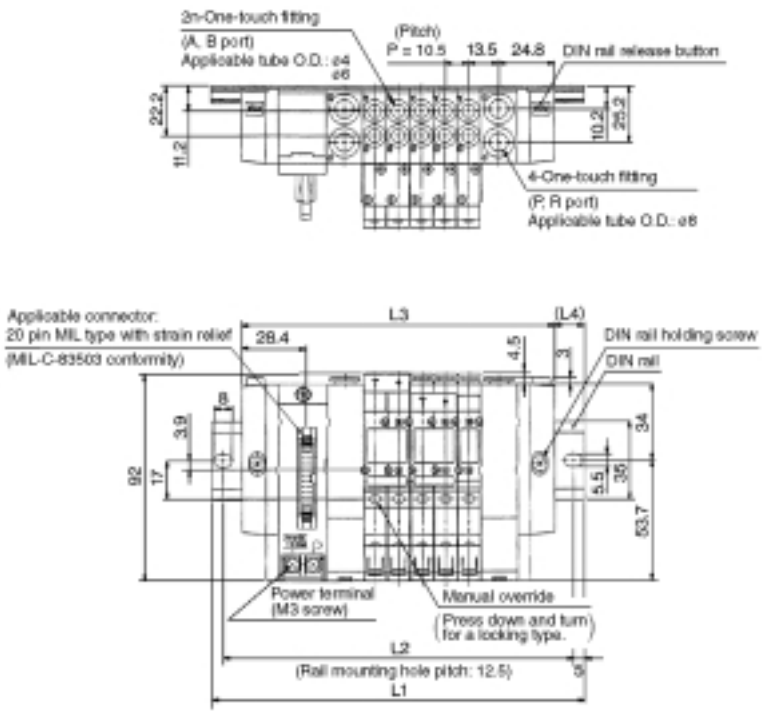

Stations n	2	3	4	5	6	7	8	9	10
L1	135.5	148	160.5	173	185.5	185.5	198	210.5	223
L2	125	137.5	150	162.5	175	175	187.5	200	212.5
L3	108	118.5	129	139.5	150	160.5	171	181.5	192
L4	13.5	14.5	15.5	16.5	17.5	12.5	13.5	14.5	15.5

Stations n	11	12	13	14	15	16
L1	235.5	248	248	260.5	273	285.5
L2	225	237.5	237.5	250	262.5	275
L3	202.5	213	223.5	234	244.5	255
L4	16.5	17.5	12	13	14	15

SS5Y3-45GD-Stations U-C4/C6

Scale: 30%

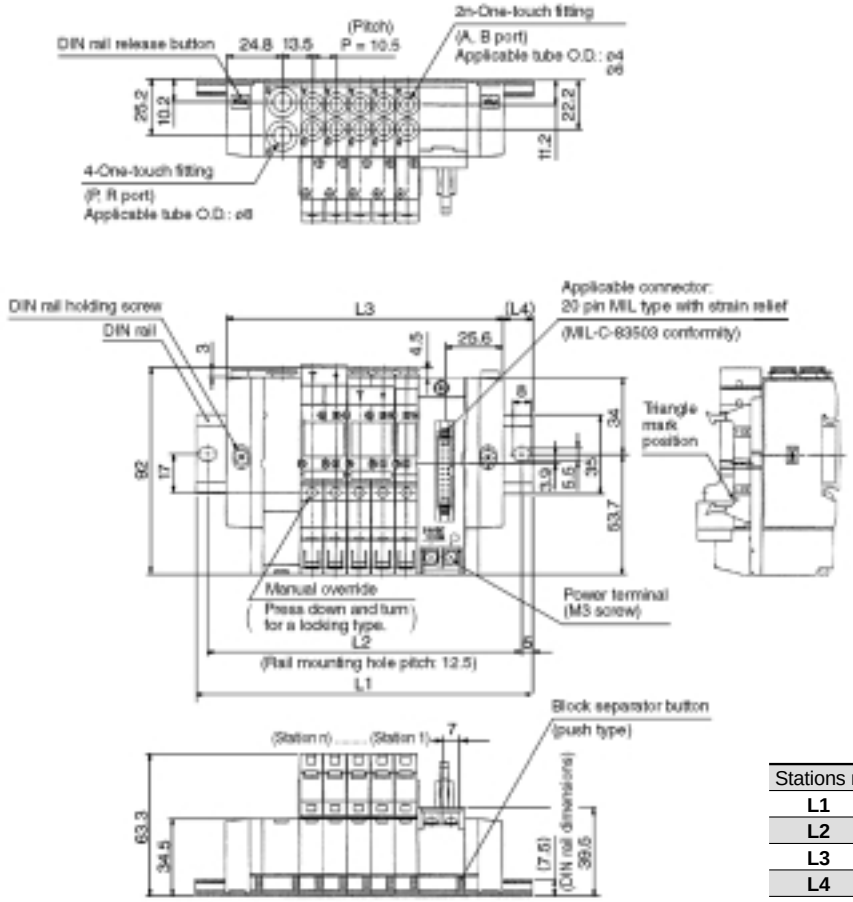

Note) Dimensions L1 to L4 of SS5Y3-45GD-Stations D-C4/C6 are the same as SS5Y3-45GD-Stations U-C4/C6.

Stations n	2	3	4	5	6	7	8	9	10
L1	123	135.5	148	148	160.5	173	185.5	198	210.5
L2	112.5	125	137.5	137.5	150	162.5	175	187.5	200
L3	91.5	102	112.5	123	133.5	144	154.5	165	175.5
L4	15.5	16.5	17.5	12.5	13.5	14.5	15.5	16.5	17.5

SS5Y3-45GD-Stations B-C4/C6

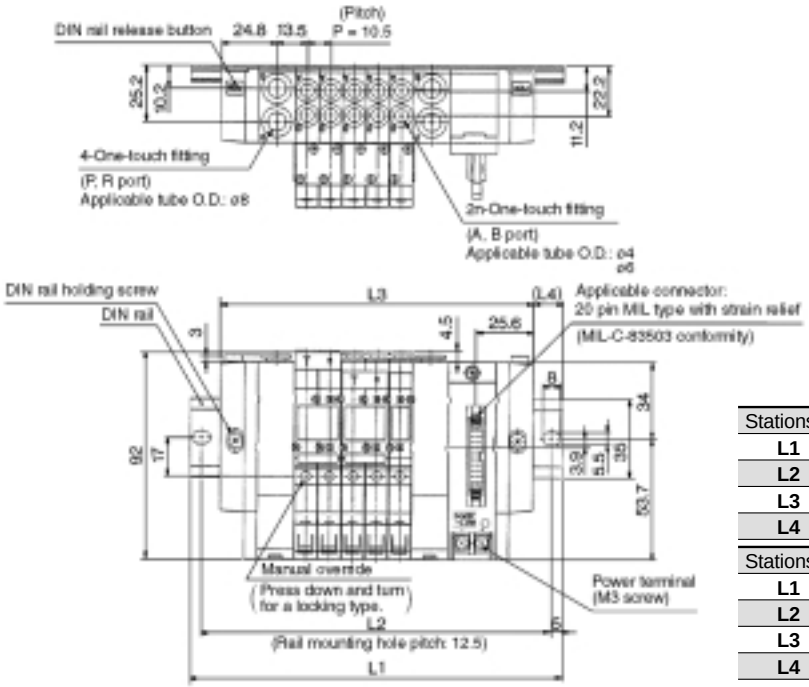

Stations n	2	3	4	5	6	7	8	9	10
L1	135.5	148	160.5	173	185.5	185.5	198	210.5	223
L2	125	137.5	150	162.5	175	175	187.5	200	212.5
L3	108	118.5	129	139.5	150	160.5	171	181.5	192
L4	13.5	14.5	15.5	16.5	17.5	12.5	13.5	14.5	15.5

Stations n	11	12	13	14	15	16
L1	235.5	248	248	260.5	273	285.5
L2	225	237.5	237.5	250	262.5	275
L3	202.5	213	223.5	234	244.5	255
L4	16.5	17.5	12	13	14	15

SY5000: PC Wiring System Compatible (Flat Ribbon Cable Type/Plug-in)

SS5Y5-45GU-Stations D-C4/C6/C8

Scale: 30%

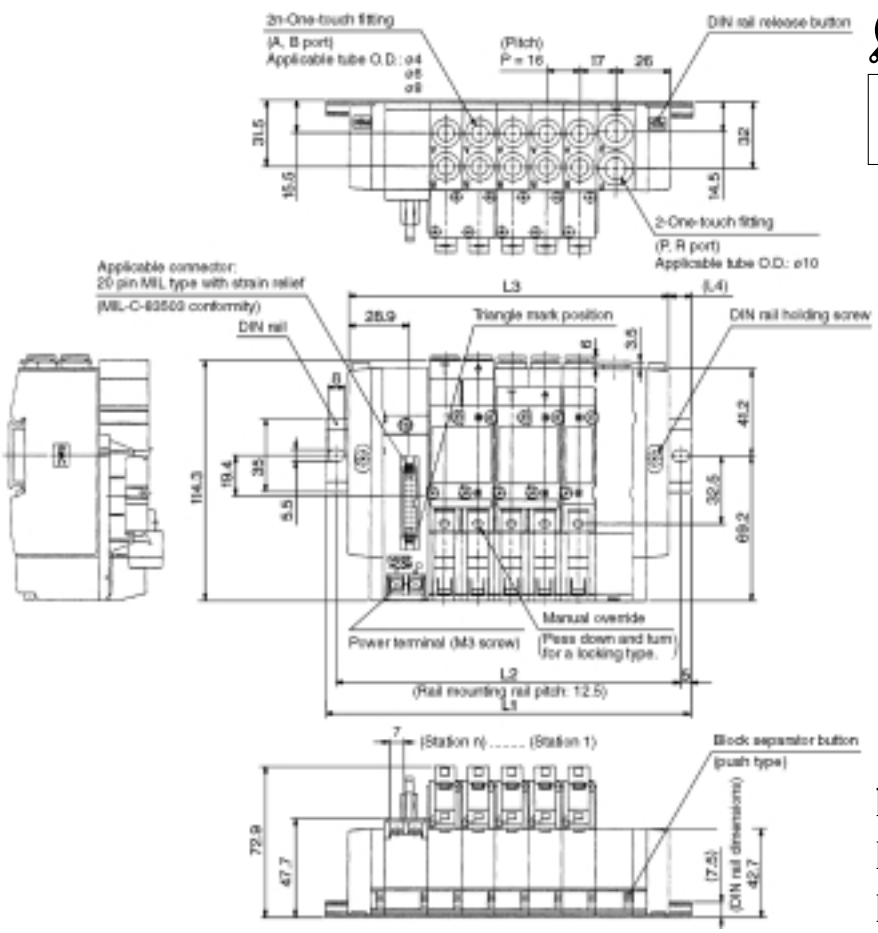

Note) Dimensions L1 to L4 of SS5Y5-45GU-Stations U-C4/C6/C8 are the same as SS5Y5-45GU-Stations D-C4/C6/C8.

Stations n	2	3	4	5	6	7	8	9	10
L1	135.5	148	160.5	185.5	198	210.5	235.5	248	260.5
L2	125	137.5	150	175	187.5	200	225	237.5	250
L3	105	121	137	153	169	185	201	217	233
L4	15	13.5	11.5	16	14.5	12.5	17	15.5	13.5

SS5Y5-45GU-Stations B-C4/C6/C8

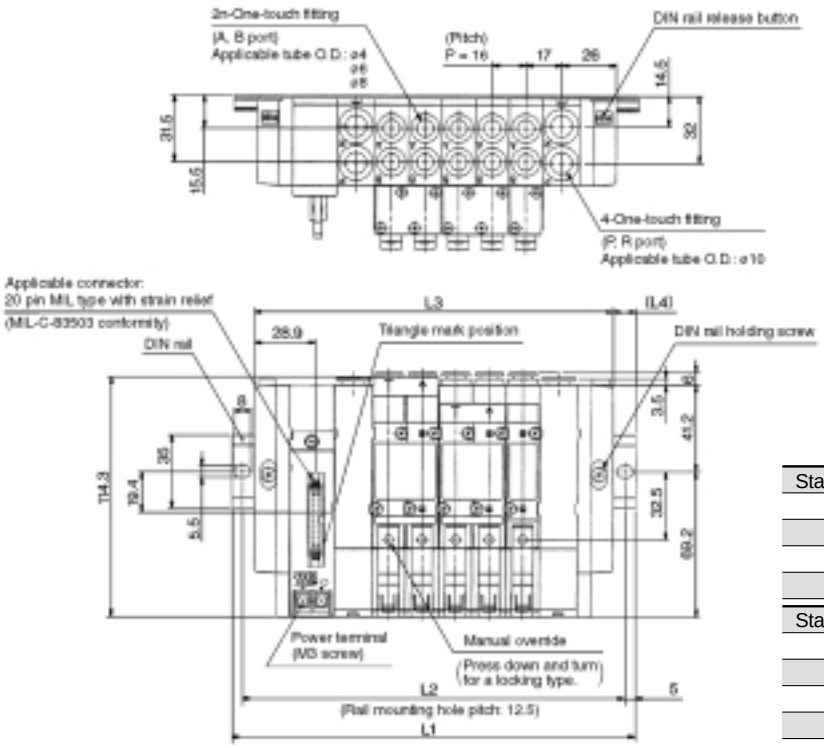

Stations n	2	3	4	5	6	7	8	9	10
L1	148	173	185.5	198	210.5	235.5	248	260.5	285.5
L2	137.5	162.5	175	187.5	200	225	237.5	250	275
L3	123	139	155	171	187	203	219	235	251
L4	12.5	17	15	13.5	11.5	16	14.5	12.5	17

Stations n	11	12	13	14	15	16
L1	298	310.5	323	348	360.5	373
L2	287.5	300	312.5	337.5	350	362.5
L3	267	283	299	315	331	347
L4	15.5	3.5	12	16.5	14.5	13

SS5Y5-45GD-Stations U-C4/C6/C8

Scale: 30%

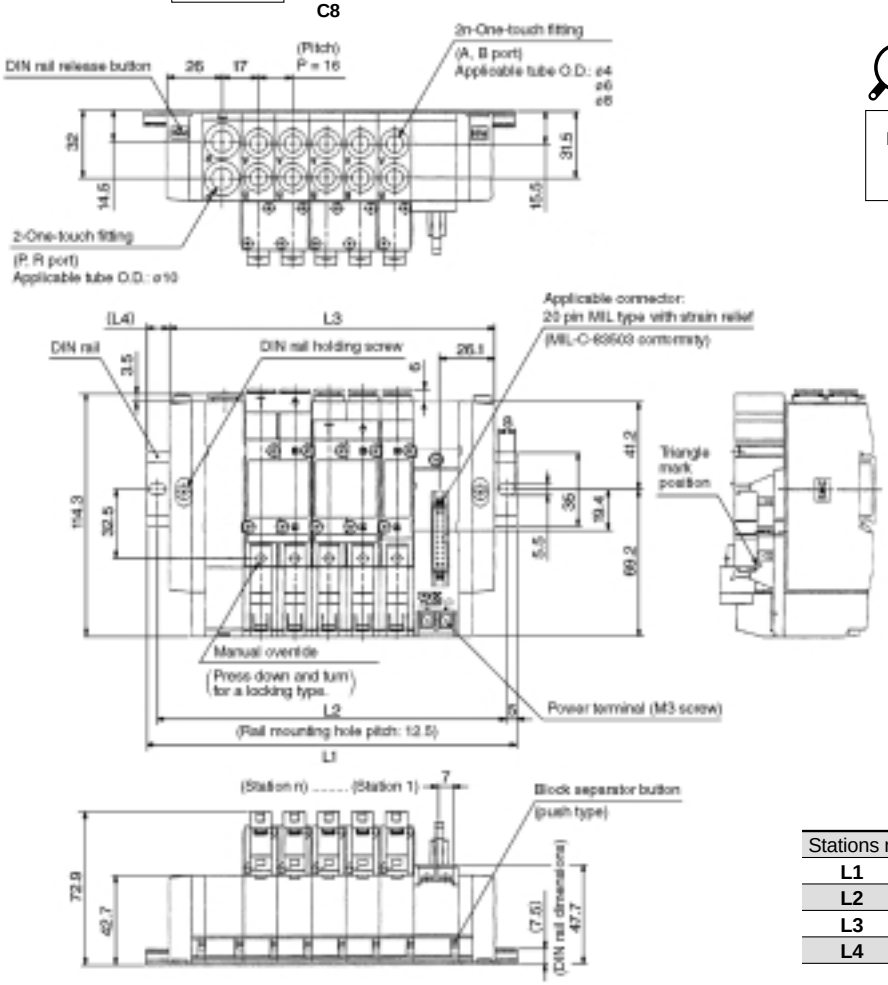

Note) Dimensions L1 to L4 of SS5Y5-45GD-Stations D-C4/C6/C8 are the same as SS5Y5-45GD-Stations U-C4/C6/C8.

Stations n	2	3	4	5	6	7	8	9	10
L1	135.5	148	160.5	185.5	198	210.5	235.5	248	260.5
L2	125	137.5	150	175	187.5	200	225	237.5	250
L3	105	121	137	153	169	185	201	217	233
L4	15	13.5	11.5	16	14.5	12.5	17	15.5	13.5

SS5Y5-45GD-Stations B-C4/C6/C8

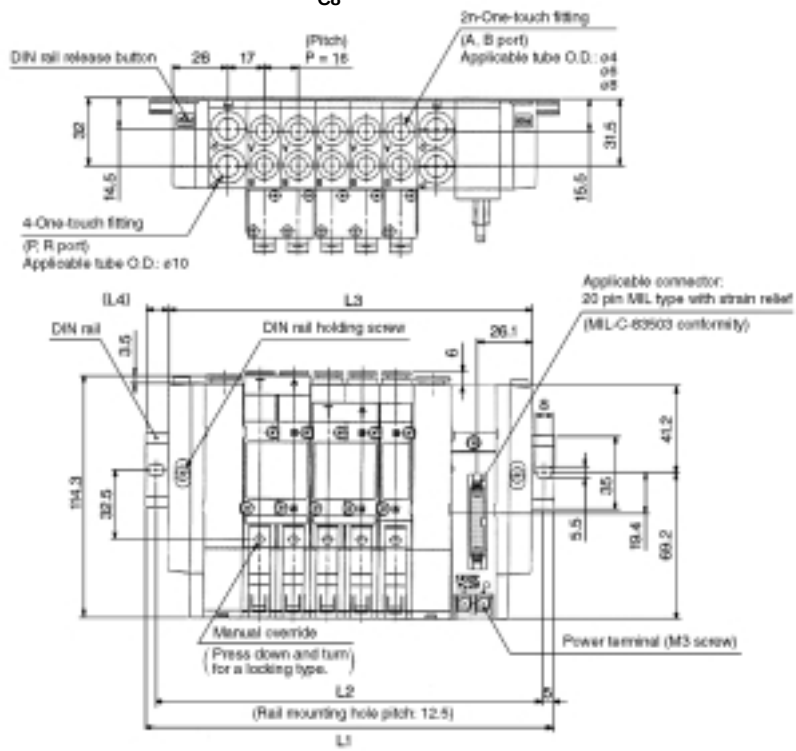

Stations n	2	3	4	5	6	7	8	9	10
L1	148	173	185.5	198	210.5	235.5	248	260.5	285.5
L2	137.5	162.5	175	187.5	200	225	237.5	250	275
L3	123	139	155	171	187	203	219	235	251
L4	12.5	17	15	13.5	11.5	16	14.5	12.5	17

Stations n	11	12	13	14	15	16
L1	298	310.5	323	348	360.5	373
L2	287.5	300	312.5	337.5	350	362.5
L3	267	283	299	315	331	347
L4	15.5	13.5	12	16.5	14.5	13

Exploded View of DIN Rail Manifold

Type 45F (D-sub connector) manifold

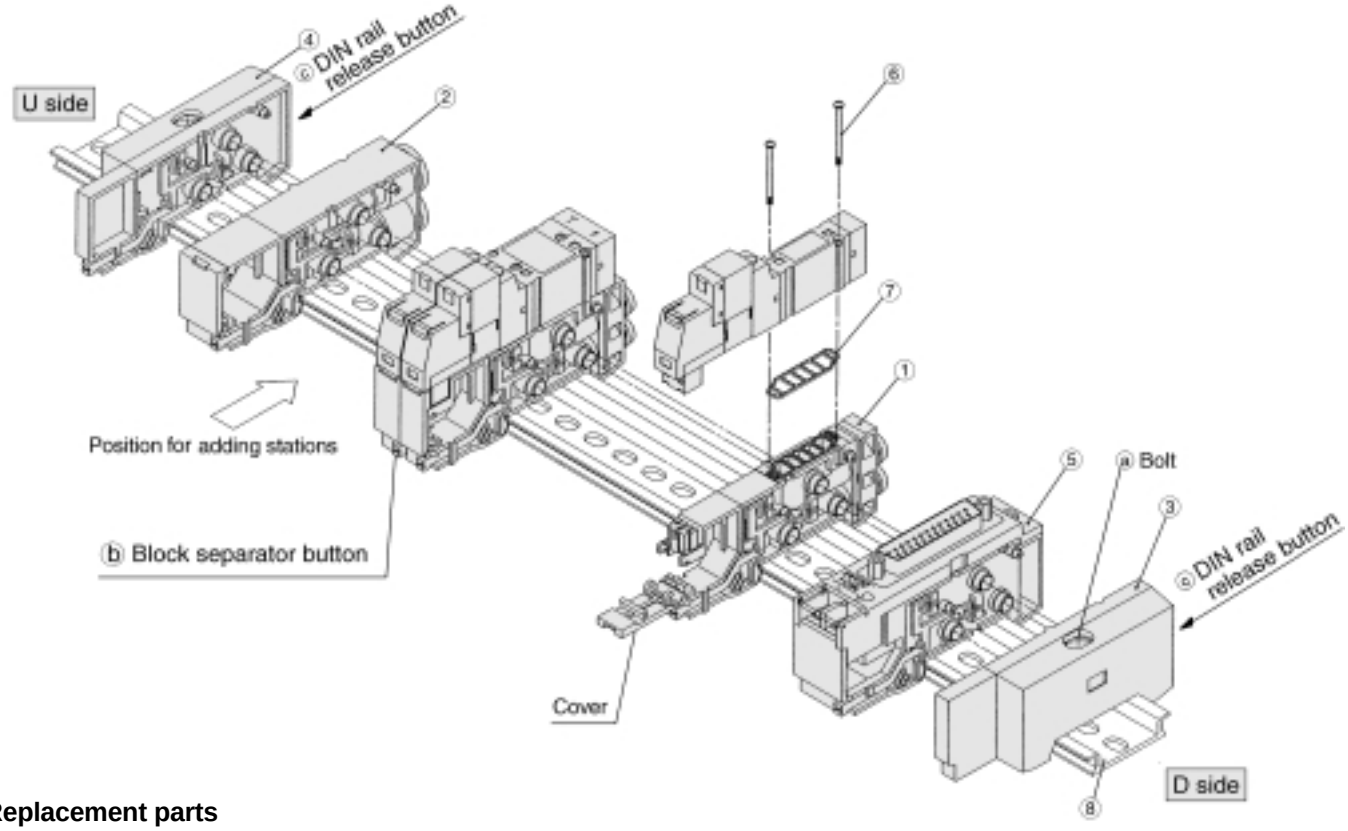

Replacement parts

No.	Description	Part no. SY3000	Part no. SY5000	Note	
1	Manifold block assembly	The manifold block assembly part number differs depending on the connector specification and lead wire assembly included. Select an appropriate manifold assembly part number from the table below. (Gasket ⑦ is included.)			
2	SUP/EXH block assembly	SX3000-51-2A	SX5000-51-2A	SY3000: P, R ports ø8 One-touch fitting SY5000: P, R ports ø10 One-touch fitting	
3	End block assembly	SX3000-52-2A	SX5000-52-2A	For D side	
4	End block assembly	SX3000-53-2A	SX5000-53-2A	For U side	
5-1	Connector block assembly (for D-sub connector)	SX3000-64-$^{1A}_{1NA}$	SX5000-64-$^{1A}_{1NA}$	-1A: Positive COM -1NA: Negative COM	24VDC specification Note)
5-2	Connector block assembly (for flat ribbon cable 26 pins)	SX3000-64-$^{2A}_{2NA}$-26	SX5000-64-$^{2A}_{2NA}$-26	-2A: Positive COM -2NA: Negative COM	
5-3	Connector block assembly (for flat ribbon cable 20 pins)	SX3000-64-$^{2A}_{2NA}$-20	SX5000-64-$^{2A}_{2NA}$-20		
5-4	Connector block assembly (for flat ribbon cable10 pins)	SX3000-64-$^{2A}_{2NA}$-10	SX5000-64-$^{2A}_{2NA}$-10		
5-5	Connector block assembly (for terminal block 2 to 8 stations [T, T1])	SX3000-64-3A	SX5000-64-3A	Positive COM, negative COM common	
5-6	Connector block assembly (for terminal block 9 to 17 stations [T1])	SX3000-64-8A	SX5000-64-8A		
6	Round head combination screw	SY3000-23-4	M3 x 26 (Flat nickel plated)		
7	Gasket	SX3000-57-4	SX5000-57-5		
8	DIN rail	VZ1000-11-1-□		Refer to page 98.	

Note 1) The numbers 5-1 through 5-4 are 24VDC specification. For 12VDC specification, add -12V at the end of the part number. Example: SX3000-64-1A-12V
Note 2) Two manifold block assemblies are required for a double solenoid 3 position (dual body type).

Manifold block assembly part nos.

Manifold type	Manifold block assembly part no.	Note
45(N)F (D-sub connector type)	SX$^{3}_{5}$000-50-3A-□□	□□: • For SY3000 C4: ø4 One-touch fitting C6: ø6 One-touch fitting • For SY5000 C4: ø4 One-touch fitting C6: ø6 One-touch fitting C8: ø8 One-touch fitting
45(N)$^{P}_{PG}$ $_{PH}$ (Flat ribbon cable type)	SX$^{3}_{5}$000-50-5A-□□	
45G PC wiring compatible		
45$^{T}_{T1}$ (Terminal block type)	SX$^{3}_{5}$000-50-7A-□□	

Manifold Base Expansion

1 Loosen bolts (a) which hold the manifold block until it begins to turn idly. (While pressing down the DIN rail release buttons (c), remove the manifold base from the DIN rail.)

2 Since stations are added on the U side, press the manifold block assembly separator button (b) on the U side until it locks, and then break the connection between block assemblies.

3 Separate the connector block assembly in the same manner as step 2, and remove the connector mounting screw as shown in Figure 1.

4 Loosen the valve mounting screw on the U side, remove the valve, and then take out the receptacle housing. (See Figure 2.)

5 Insert the common wire (red), of the manifold block assembly to be added, into the pin insertion section (N mark) of the receptacle housing, which was taken out in step 4. Mount this to the manifold block and remount the removed valve.

6 On the U side, mount the manifold block assembly to be added onto the DIN rail as shown in Figure 3. Refer to the circuit diagram and insert the lead wire (black) as shown in Figure 4.

7 Connect the manifold block assemblies by pressing them together until a click is heard. Put the lead wire inside the manifold block and close the lid, making sure that the lead wire does not get caught.

8 Hold the block assemblies lightly so that there is no space between them and secure them on the DIN rail by tightening bolts (a). ⚠**Caution** (Tightening torque: 1.4N·m)

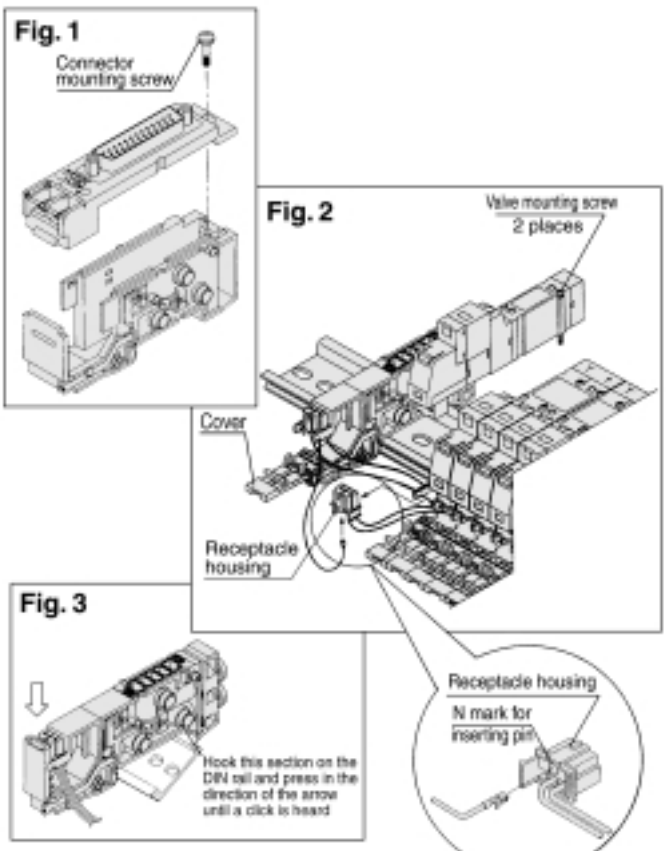

Figure 4

D-sub connector (45F) **Flat ribbon cable (45P□)** **Terminal block (45$^{T}_{T1}$)**

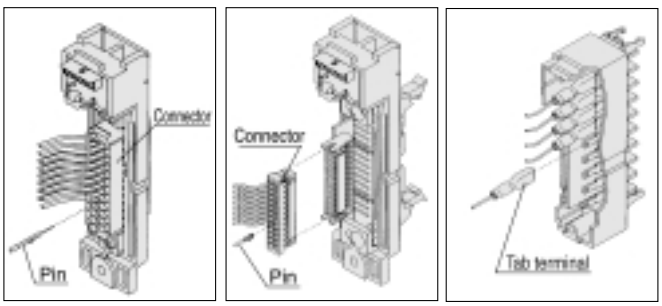

Note) After inserting the pin, lightly pull the lead wire to confirm that the pins are locked.

Note) Remove the connector before beginning work. Also, after inserting pins, lightly pull the lead wire to confirm that the pins are locked.

Note) Insert tab terminals completely to the end.

⚠Caution

Note 1) Depending on the connector type, there is a limit to the number of solenoids that be used with this manifold. Manifold stations that can be added cannot exceed the number of usable solenoids.

Note 2) Note that manifold block assemblies are always added on the U side since the wiring to each connector is made sequentially from the D side.

Note 3) When disassembly and assembly are performed, insufficient connection of blocks or tightening of bolts (a) will cause air leakage. Be sure to confirm that there is no space between the manifold blocks and they are firmly secured on the DIN rail before supplying air. After supplying air, confirm that there is no air leakage.

How to Replace Fitting Assemblies

By replacing manifold block fitting assemblies on a type 45 manifold, the port size of the A and B ports can be changed.
To replace these parts, remove the clip with a flat head screw driver after the valve has been removed. Insert the fitting assemblies, and then reinsert the clip so that it does not protrude from the manifold block.

Fitting assembly part nos.

Port size \ Series	SY3000	SY5000
ø4 One-touch fitting	VVQ1000-50A-C4	VVQ1000-51A-C4
ø6 One-touch fitting	VVQ1000-50A-C6	VVQ1000-51A-C6
ø8 One-touch fitting	———	VVQ1000-51A-C8

Note 1) Fitting assemblies for P and R ports cannot be changed.

Note 2) Do not scratch or put foreign matter on the O-ring, as this will cause air leakage.

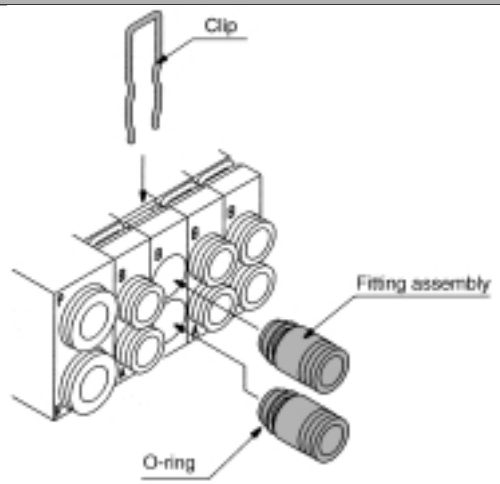

SY3000/5000 Base Mounted Type Manifold Stacking Type/DIN Rail Mount
Serial Transmission (Integrated)

How to Order Manifolds

SS5Y 3 – 45S A – 05 U – C6 – □

Manifold series

3	SY3000
5	SY5000

SI unit type

Symbol	Specification
O	Without SI unit
A	General purpose type: Series EX300
B	MELSECNET/MINI-S3
C	SYSBUS
D	Satellite I/O Link
E	MEWNET-F
F1	Uni-wire (16 output)
G	Allen-Bradley Remote I/O
H	Uni-wire H system
J1	S-Link (16 outputs)
J2	S-Link (8 outputs)
K	T Link Mini
Q	DeviceNet
R1	CompoBus/S (16 outputs)
R2	CompoBus/S (8 outputs)
U	JEMANET
V	CC-Link

Note 1) With general purpose types, a transmission unit is required on the CPU side.
Note 2) Even without an SI unit, the length of the DIN rail can accommodate an SI unit.

SI unit part nos.

Note) Refer to page 148 for the full descriptions and part numbers of SI units.

Stations

Symbol	Stations	Note
02	2 stations	Single wiring specification (Up to 16 solenoids applicable)
⋮	⋮	
16	16 stations	

Note 1) Includes the number of blanking plate assemblies.
Note 2) Two manifold stations are required for double solenoid 3 position valves (dual body type).

SUP/EXH block assembly mounting position

Symbol	Mounting position	Applicable stations
U	U side	2 to 10 stations
D	D side	2 to 10 stations
B	Both sides	2 to 16 stations
M*	Special specifications	

* For special specifications, order separately on a manifold specification sheet.

A/B port size

SY3000

Symbol	Port size
C4	ø4 One-touch fitting
C6	ø6 One-touch fitting
M*	Mixed

SY5000

Symbol	Port size
C4	ø4 One-touch fitting
C6	ø6 One-touch fitting
C8	ø8 One-touch fitting
M*	Mixed

* For mixed specifications, order separately on a manifold specification sheet.

Option

When a DIN rail longer than the specified stations is necessary, indicate the number of required stations. (Max. 20 stations)

How to Order Manifold Assemblies (Example)

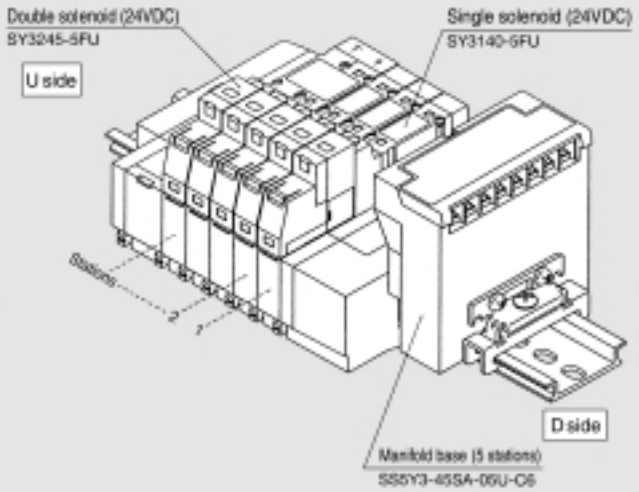

SS5Y3-45SA-05U-C6..... 1 set (Type 45S, 5 station manifold base with serial unit part no.)
* SY3140-5FU ..... 3 sets (Single solenoid part no.)
* SY3245-5FU ..... 1 set (Double solenoid part no.)

To order valves and options mounted onto the manifold at the factory, list the valve/option with an asterisk (*) in front of each part number.

- Valves are assembled from the D side.
- Since double solenoid 3 position valves (dual body type) require 2 manifold stations, be sure to specify the appropriate number of stations with the manifold part number.
  (Manifold Specification Sheet on pages 219 and 220)
- Serial units are only available with the D side mounting type.

How to Order Valves

2 position single **SY 3 1 4 0 – 5 FU □**

Double solenoid 3 position **SY 3 2 4 5 – 5 FU □**

Series

3	SY3000
5	SY5000

Type of actuation

2	2 position double
3	3 position closed center
4	3 position exhaust center
5	3 position pressure center

Dual body type (double solenoid 3 position)

Rated voltage

5	24VDC

Manual override

Nil	Non-locking push type
D	Push-turn locking slotted type
E	Push-turn locking lever type

■ The serial transmission system minimizes the number of wire connections and saves space.
■ 16 stations maximum (For 9 stations or more, indicate on a manifold specification sheet.)

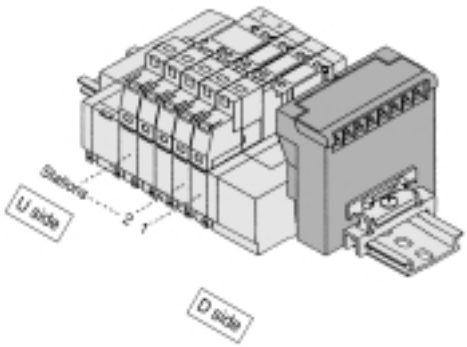

- Valves are numbered from the D side.
- A maximum of 16 solenoids (16 stations with single solenoids) can be used.

Item	Specification	
External power supply	24VDC±10%	
Current consumption (Inside unit)	0.1A	SA, SB, SD, SE, SF1, SG, SJ1, SJ2, SK, SR1, SR2, SH, SU, SV
	0.3A	SC, SQ

	Type SA compatible with Series EX300	Type SB compatible with Mitsubishi Electric Corporation MELSECNET/MINI-S3 Data Link System
Terminal block LED description	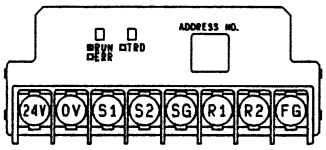	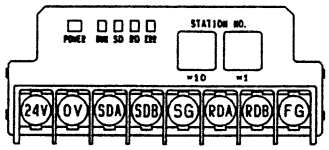
	LED description / Detail: TRD — Lights up when receiving data; RUN/ERR — Blinks when receiving normal data, lights up when receiving abnormal data	LED description / Detail: POWER — Lights up with power input; RUN — Lights up when normally transmitting data with master station; RD — Lights up when receiving data; SD — Lights up when receiving data; ERR. — Lights up when error occurs during data reception, OFF when normal
Note	• Connect to the I/O card of transmission PLC manufacturers to enable serial transmission. EX300-TMB1…for Mitsubishi Electric Corporation EX300-TTA1….for OMRON corporation EX300-TFU1….for Fuji Electric Co., Ltd. EX300-T001…. General purpose ∗ Up to 32 points controlled per transmission unit. • 16 outputs	• MELSECNET/MINI-S3 Data Link System Master unit: AJ71PT32-S3 AJ71T32-S3 A1SJ71PT32-S3 • 16 outputs, 2 occupied stations
Cable wiring	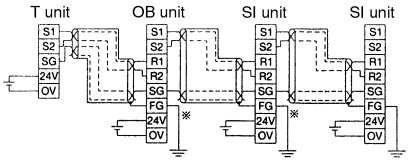 ∗ Ground the shielding of the shield wire on the reception or transmission side.	SI manifold solenoid valves 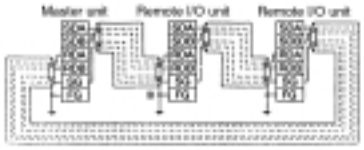 ∗ Ground the shielding of the shield wire on the reception or transmission side.

	Type SC compatible with OMRON Corporation SYSBUS Wire System	Type SD compatible with SHARP Corporation Satellite I/O Link System	Type SE compatible with Matsushita Electric Works MEWNET-F System
Terminal block LED description	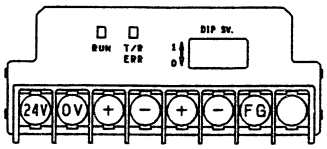	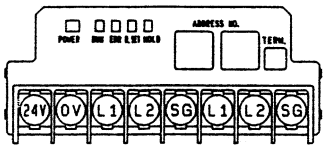	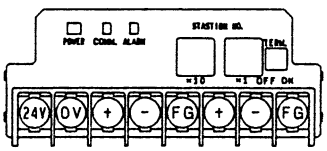
	LED description / Detail: RUN — Lights up when transmission is normal and PLC is in operation mode; T/R ERR — Blinks when transmission is normal, lights up when transmission is abnormal	LED description / Detail: POWER — Lights up with power ON; RUN — Lights up when power ON and slave stations in normal operation; ERROR — Lights up when slave station switch is not normal, communication is not normal, master station's PLC at rest, or with malfunction of slave unit; R.SET HOLD — Lights up when control input is made for master station	LED description / Detail: POWER — Lights up with power ON; COMM. — Blinks when receiving/transmitting data; ALARM — Lights up when unit is not normal, blinks with incorrect setting
Note	• SYSBUS Wire System Master station unit: C500-RM201 C200H-RM201 • 16 outputs	• Satellite I/O Link System Master station unit: ZW-31LM JW-31LM JW-23LM • 16 outputs	• MEWNET-F System Master station unit: AFP3740 AFP5740 • 16 outputs
Cable wiring	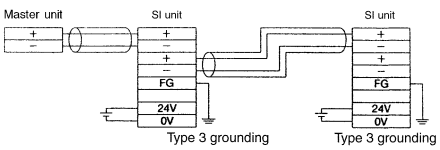	a) 2 line wiring Does not include the signal grounding wire (SG). 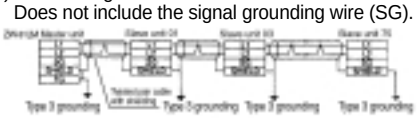 b) 3 line wiring Does not include the signal grounding wire (SG). 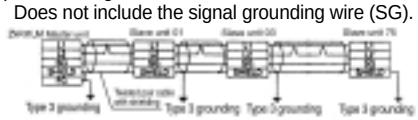	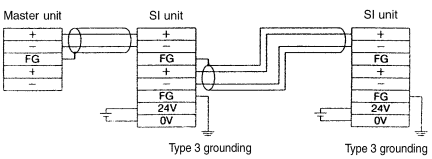

Type SF1 compatible with NKE Corporation Uni-wire System

Terminal block LED description

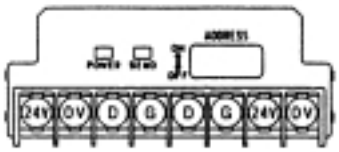

LED description	Detail
POWER	Lights up with power input (Lights up when normal, flickers when voltage is low)
SEND	Blinks when transmission is normal, goes OFF or lights up when abnormal

Note

- Uni-wire System
  Send unit: SD-120
- 16 outputs

Cable wiring

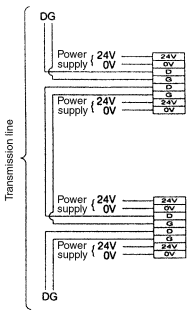

Type SG compatible with Rockwell Automation Allen-Bradley Remote I/O System

Terminal block LED description

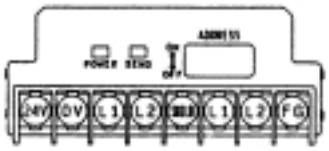

LED description	Detail
POWER	Lights up with power ON
COM.	Lights up when transmission is normal, blinks when initializing transmission, light OFF when transmission is not normal
ERROR	Lights up when transmission is not normal

Note

- Allen-Bradley Remote I/O System
- 16 outputs

Cable wiring

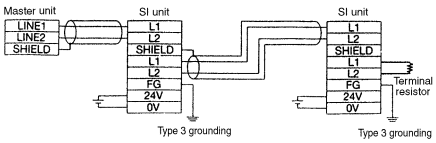

Type SJ1, SJ2 compatible with SUNX Corporation S-LINK System

Terminal block LED description

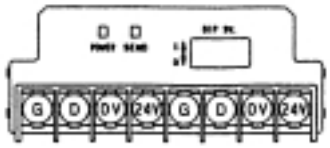

LED description	Detail
POWER	Lights up with power input
SEND	Blinks when transmission is normal, blinks slowly when abnormal

Note

- S-LINK System
  S-LINK Controller: SL-CU1
- 16 outputs (Type SJ1)
  8 outputs (Type SJ2)

Cable wiring

a) T type multi-drop wiring (S-LINK system)

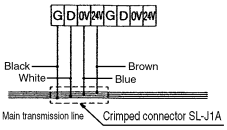

b) Cross-over wiring (Sensor link system)

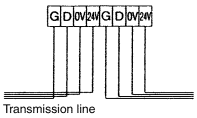

S-LINK dedicated flat ribbon cable SL-RCM✻00 is used in the example above.

Type SK compatible with Fuji Electric Co., Ltd. T Link Mini System

Terminal block LED description

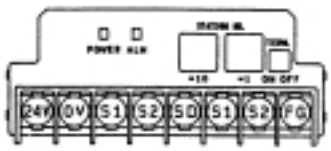

LED description	Detail
POWER	Lights up with power input
SEND	Lights up when transmission is not normal or power is lost on the processor side

Note

- T Link Mini System
  Master unit: FTM100B
  Converter: FRC100A-G02
  Repeater: FRC200A-C10
- 16 outputs

Cable wiring

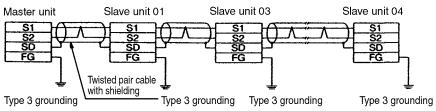

Connect the shield wire to the SD terminal. If it is not connected to the SD terminal, normal transmission is impossibile even for a short distance. Also, do not ground the shield wire (SD).

Type SQ compatible with DeviceNet

Terminal block LED description

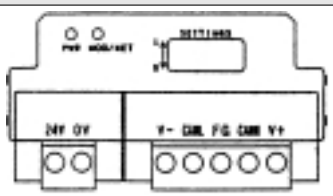

LED description	Detail
POWER	Green light ON with power input to circuit
MOD/NET	Light OFF when power supply is OFF to the circuit to which the unit is not connected
	Green light ON continuously when the unit is connected and operating
	Red light blinks when abnormal transmission occurs in the available circuit
	Red light ON continuously when abnormal transmission occurs in the unavailable circuit or connection is unavailable

Note

- DeviceNet
- OMRON Corporation CompoBus/D system
  Master unit: C200HW-DSM21
- 16 outputs

Cable wiring

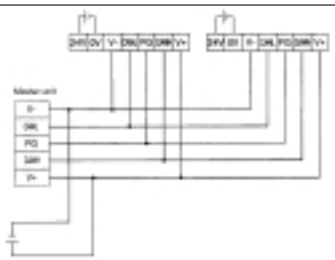

Type SR1, SR2 compatible with OMRON Corporation CompoBus/S

Terminal block LED description

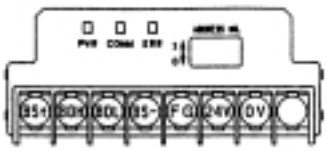

LED description	Detail
POWER	Lights up with power supplied for transmission, light OFF without power
COMM	Lights up with normal transmission, light OFF when not normal or waiting
ERR	Lights up when abnormal transmission occurs, light OFF when transmission is normal or waiting

Note

- CompoBus/S System
  Master unit: C200HW-SRM21
  Master unit: CQM1-SRM21
- 16 outputs (Type SR1)
  8 outputs (Type SR2)

Cable wiring

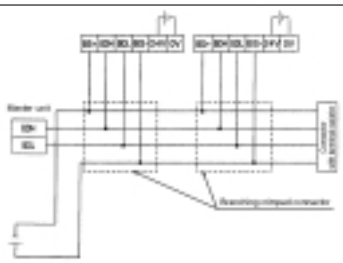

	Type SH compatible with NKE Corporation Uni-wire H System	Type SU compatible with JEMANET (JPCN-1)	Type SV compatible with Mitsubishi Electric Corporation CC-LINK System
Terminal block LED description	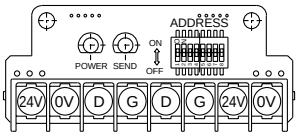	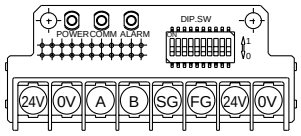	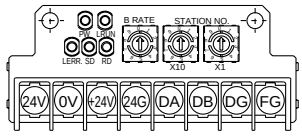
	LED description / Detail POWER: Lights up with power input (Lights up when normal, flickers when voltage is low) SEND: Blinks when transmission is normal, goes OFF or lights up when abnormal	LED description / Detail POWER: Lights up with power input to SI unit COMM: Lights up when transmission is normal ALARM: Lights up when transmission is abnormal	LED description / Detail PWR: Lights up with power supplied for transmission, light OFF without power L RUN: Lights up when receiving normal data SD: Lights up when transmitting data RD: Lights up when receiving data L ERR.: Lights up when transmitting/setting error occurs, blinks when station number/transmission speed setting is changed during transmission
Note	• Uni-wire H System Send unit: SD-H2 • 16 outputs	• JEMANET (JPCN-1) (Reference) AJ71J92-S3 (Mitsubishi Electric Corporation) A1SJ71J92-S3 (Mitsubishi Electric Corporation) C200HW-JRM21 (OMRON Corporation) NJ-JPCN-1 (Fuji Electric Co., Ltd.) NP1L-JP1 (Fuji Electric Co., Ltd.) • 16 outputs	• CC-LINK System Master unit: AJ61BT11 Master unit: A1SJ61BT11 Master unit: AJ61QBT11 Master unit: A1SJ61QBT11 • 16 outputs
Cable wiring	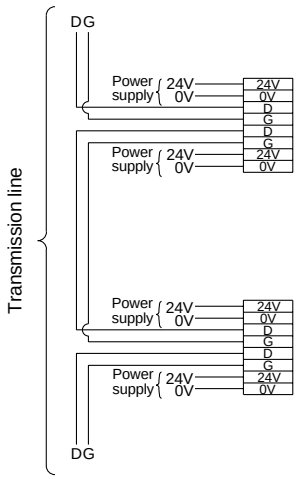	a) 2 line wiring 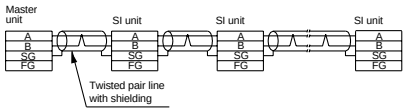 b) 3 line wiring 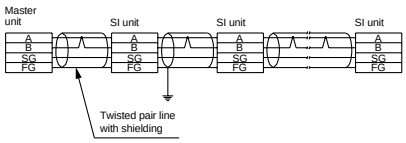	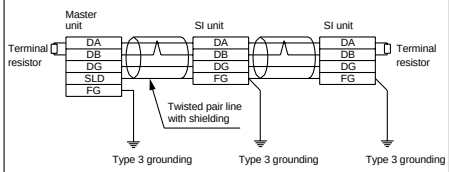

SI unit part nos.

Symbol	Specification	SS5Y□-45S	Symbol	Specification	SS5Y□-45S
A	General purpose type: Series EX300	EX322-S001	J1	SUNX Corporation: S-LINK System (16 outputs) compatible	EX122-SSL1
B	Mitsubishi Electric Corporation: MELSECNET/MINI-S3 Data Link System compatible	EX122-SMB1	J2	SUNX Corporation: S-LINK System (8 outputs) compatible	EX122-SSL2
C	OMRON Corporation: SYSBUS Wire System compatible	EX122-STA1	K	Fuji Electric Co., Ltd: T Link Mini System compatible	EX122-SFU1
D	SHARP Corporation: Satellite I/O Link System compatible	EX122-SSH1	Q	DeviceNet, OMRON Corporation: CompoBus/D compatible	EX122-SDN1
E	Matsushita Electric Works: MEWNET-F System compatible	EX122-SPA1	R1	OMRON Corporation: CompoBus/S (16 outputs) compatible	EX122-SCS1
F1	NKE Corporation: Uni-wire System (16 outputs) compatible	EX122-SUW1	R2	OMRON Corporation: CompoBus/S (8 outputs) compatible	EX122-SCS2
G	Rockwell Automation: Allen-Bradley Remote I/O System compatible	EX122-SAB1	U	JEMANET (JPCN-1) compatible	EX122-SJN1
H	NKE Corporation: Uni-wire H System compatible	EX122-SUH1	V	Mitsubishi Electric Corporation: CC-LINK System compatible	EX122-SMJ1

Series SY3000: Serial Transmission/Plug-in

SS5Y3-45S□-Stations U-C4/C6

Scale: 30%

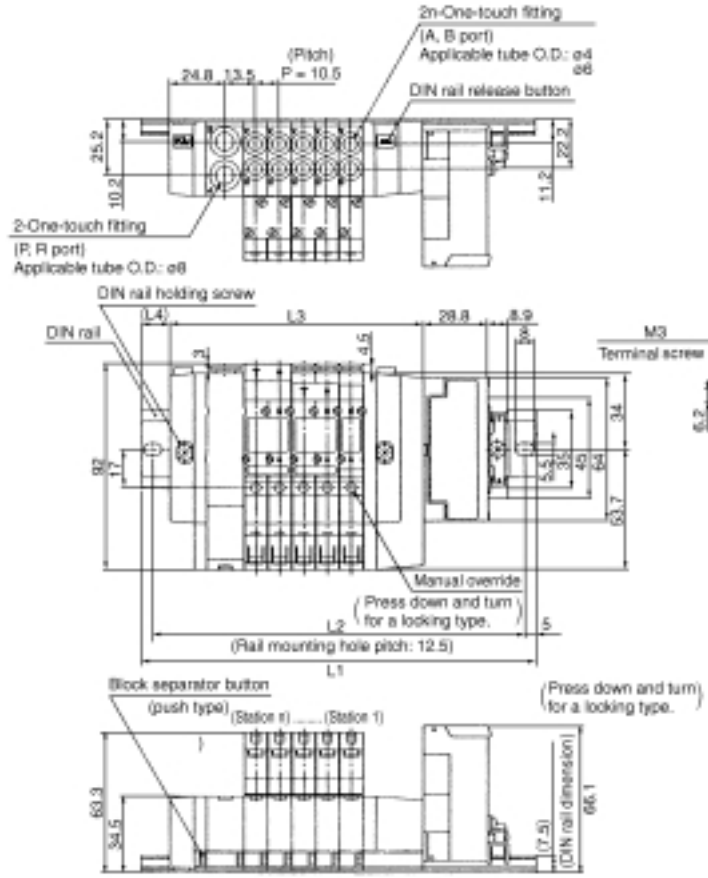

Stations n	2	3	4	5	6	7	8	9	10
L1	148	160.5	173	185.5	185.5	198	210.5	223	235.5
L2	137.5	150	162.5	175	175	187.5	200	212.5	225
L3	81	91.5	102	112.5	123	133.5	144	154.5	165
L4	14.45	15.45	16.45	17.45	12.2	13.2	14.2	15.2	16.2

Note) The width of the SI unit will be 24.3mm longer for applications with E: Matsushita Electric Works or G: Rockwell Automation Contact SMC for details.

SS5Y3-45S□-Stations B-C4/C6

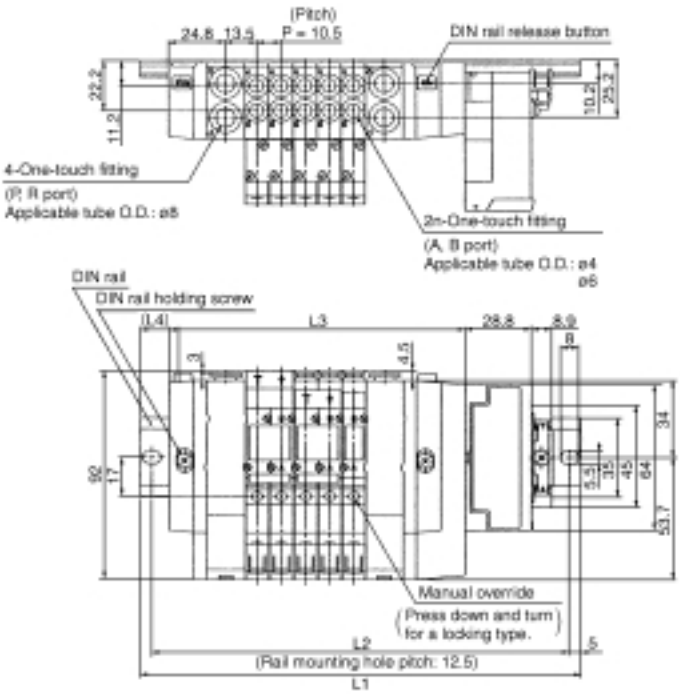

Stations n	2	3	4	5	6	7	8	9	10
L1	160.5	173	185.5	198	210.5	223	223	235.5	248
L2	150	162.5	175	187.5	200	212.5	212.5	225	237.5
L3	97.5	108	118.5	129	139.5	150	160.5	171	181.5
L4	12.45	13.45	14.45	15.45	16.45	17.45	12.2	13.2	14.2

Stations n	11	12	13	14	15	16
L1	260.5	273	285.5	285.5	298	310.5
L2	250	262.5	275	275	287.5	300
L3	192	202.5	213	223.5	234	244.5
L4	15.2	16.2	17.2	11.95	12.95	13.95

Note) The width of the SI unit will be 24.3mm longer for applications with E: Matsushita Electric Works or G: Rockwell Automation Contact SMC for details.

Series SY5000: Serial Transmission Type/Plug-in

SS5Y5-45S□- Stations U- C4 C6 C8

Scale: 30%

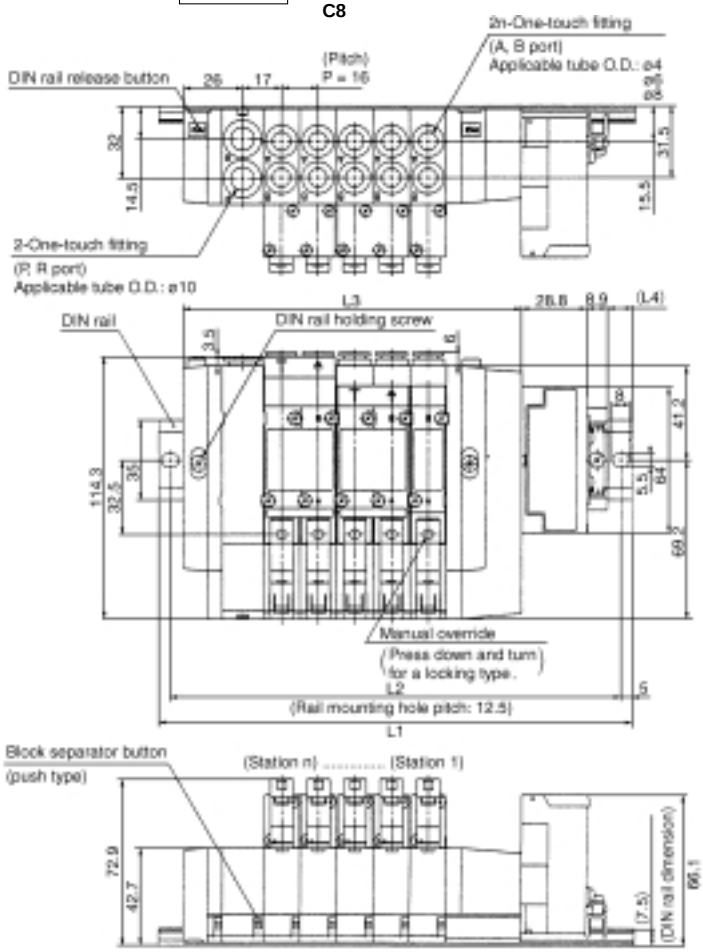

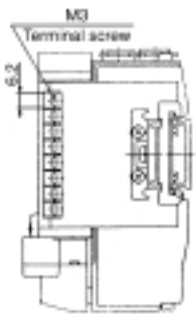

Stations n	2	3	4	5	6	7	8	9	10
L1	173	185.5	198	210.5	235.5	248	260.5	285.5	298
L2	162.5	175	187.5	200	225	237.5	250	275	287.5
L3	100	116	132	148	164	180	196	212	228
L4	17.45	15.7	13.95	12.2	16.7	14.95	13.2	17.7	15.95

Note) The width of the SI unit will be 24.3mm longer for applications with E: Matsushita Electric Works or G: Rockwell Automation Contact SMC for details.

SS5Y5-45S□- Stations B- C4 C6 C8

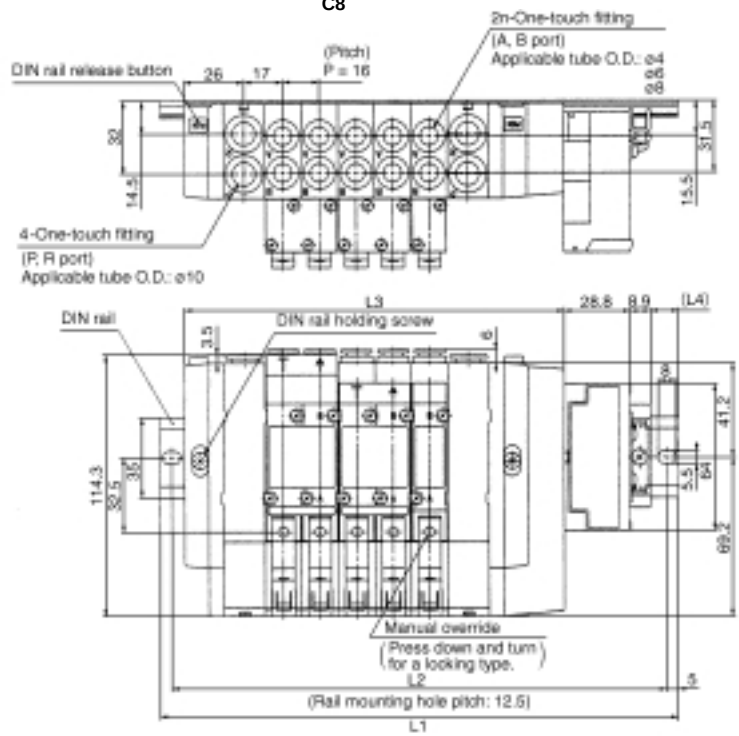

Stations n	2	3	4	5	6	7	8	9	10
L1	185.5	198	223	235.5	248	260.5	285.5	298	310.5
L2	175	187.5	212.5	225	237.5	250	275	287.5	300
L3	118	134	150	166	182	198	214	230	246
L4	14.7	12.95	17.45	15.7	13.95	12	16.5	14.95	13.2

Stations n	11	12	13	14	15	16
L1	335.5	348	360.5	373	398	410.5
L2	325	337.5	350	362.5	387.5	400
L3	262	278	294	310	326	342
L4	17.7	15.95	14.2	12.45	16.95	15.2

Note) The width of the SI unit will be 24.3mm longer for applications with E: Matsushita Electric Works or G: Rockwell Automation Contact SMC for details.

SY3000/5000 Base Mounted Type Manifold Stacking Type/DIN Rail Mount
Serial Transmission (Separated)

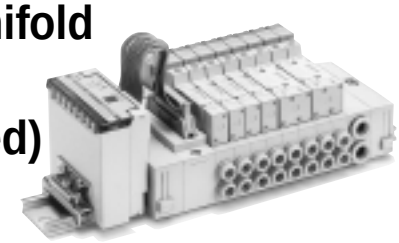

How to Order Manifolds

SS5Y 3 – 45S1 A D – 05 U – C4 –

Manifold series

3	SY3000
5	SY5000

SI unit type

Symbol	Specification
O	Without SI unit
A	General purpose type: Series EX300
B	MELSECNET/MINI-S3
C	OMRON SYSBUS
D	Satellite I/O Link
E	MEWNET-F
F1	Uni-wire (16 outputs)
G	Allen-Bradley Remote I/O
H	Uni-wire H system
J1	S-Link (16 outputs)
J2	S-Link (8 outputs)
K	T Link Mini
Q	DeviceNet
R1	CompoBus/S (16 outputs)
R2	CompoBus/S (8 outputs)
U	JEMANET
V	CC-Link

Note 1) With general purpose types, a transmission unit is required on the CPU side.
Note 2) Even without an SI unit, the length of the DIN rail can accommodate an SI unit. If a shorter length for the DIN rail is desired (same as type 45□), add "0" for option at the end of the part number.
Note 3) Refer to pages 146 through 148 for SI unit specifications.

SI unit mounting position

Symbol	Mounting position
U	U side
D	D side

Stations

Symbol	Stations	Note
02	2	Single wiring specification (Up to 16 solenoids applicable)
⋮	⋮	
16	16	

Note 1) Includes the number of blanking plate assemblies.
Note 2) Two manifold stations are required for double solenoid 3 position valves (dual body type).

SUP/EXH block assembly mounting position

Symbol	Mounting position	Applicable stations
U	U side	2 to 10 stations
D	D side	2 to 10 stations
B	Both sides	2 to 16 stations
M*	Special specifications	

* For special specifications, order separately on a manifold specification sheet.

A/B port size

SY3000

Symbol	Port size
C4	ø4 One-touch fitting
C6	ø6 One-touch fitting
M*	Mixed

SY5000

Symbol	Port size
C4	ø4 One-touch fitting
C6	ø6 One-touch fitting
C8	ø8 One-touch fitting
M*	Mixed

* For mixed specifications, order separately on a manifold specification sheet.

Option

When a DIN rail longer than the specified stations is necessary, indicate the number of required stations. (Max. 20 stations)

SI unit part nos.

Note) Refer to page 148 for the full descriptions and part numbers of SI units.

Note) For terminal block LED descriptions and cable wiring of SI units, refer to pages 146 through 148.

For external pilot specifications and built-in silencer, refer to page 184.

How to Order Manifold Assemblies (Example)

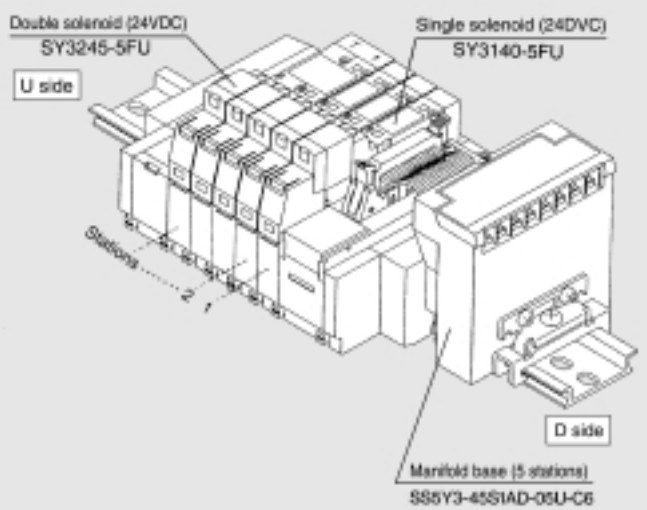

SS5Y3-45S1AD-05U-C6..... 1 set (Type 45S1, 5 station manifold base with serial unit part no.)
* SY3140-5FU ..... 3 sets (Single solenoid part no.)
* SY3245-5FU ..... 1 set (Double solenoid part no.)

To order valves and options mounted onto the manifold at the factory, list the valve/option with an asterisk (*) in front of each part number.

- Valves are assembled from the D side regardless of the mounting position of the SI unit.
- Since double solenoid 3 position valves (dual body type) require 2 manifold stations, be sure to specify the appropriate number of stations with the manifold part number.
(Manifold Specification Sheet on pages 221 and 222)

How to Order Valves

2 position single **SY 3 1 4 0 – 5 FU □**

Double solenoid 3 position **SY 3 2 4 5 – 5 FU □**

Series

3	SY3000
5	SY5000

Type of actuation

2	2 position double
3	3 position closed center
4	3 position exhaust center
5	3 position pressure center

Dual body type (double solenoid 3 position)

Rated voltage

5	24VDC

Manual override

Nil	Non-locking push type
D	Push-turn locking slotted type
E	Push-turn locking lever type

Series SY3000: Serial Transmission/Plug-in

SS5Y3-45S1□U-Stations U-$^{C4}_{C6}$

Scale: 30%

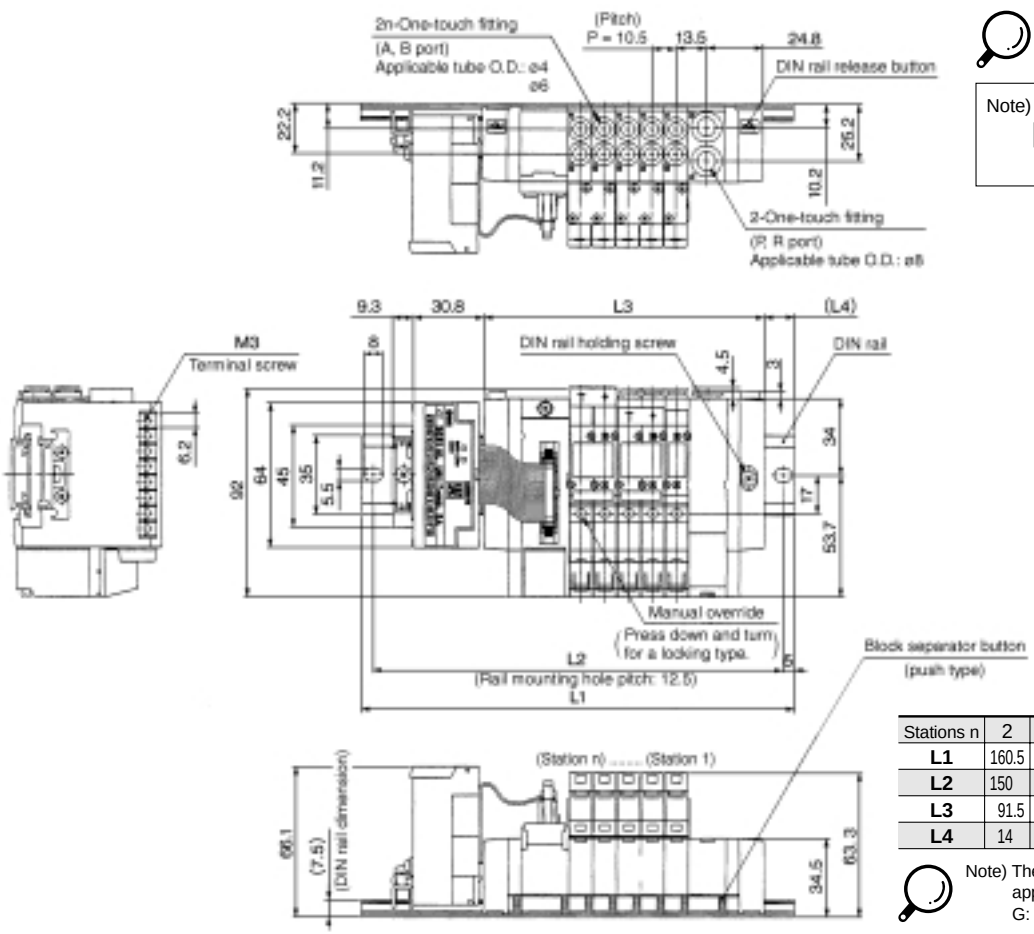

Note) Dimensions L1 to L4 of SS5Y3-45S1□U-Stations U-$^{C4}_{C6}$ are the same as SS5Y3-45S1□U-Stations D-$^{C4}_{C6}$.

Stations n	2	3	4	5	6	7	8	9	10
L1	160.5	173	185.5	198	198	210.5	223	235.5	248
L2	150	162.5	175	187.5	187.5	200	212.5	225	237.5
L3	91.5	102	112.5	123	133.5	144	154.5	165	175.5
L4	14	15	16	17	12	13	14	15	16

Note) The width of the SI unit will be 24.3mm longer for applications with E: Matsushita Electric Works or G: Rockwell Automation Contact SMC for details.

SS5Y3-45S1□U-Stations B-$^{C4}_{C6}$

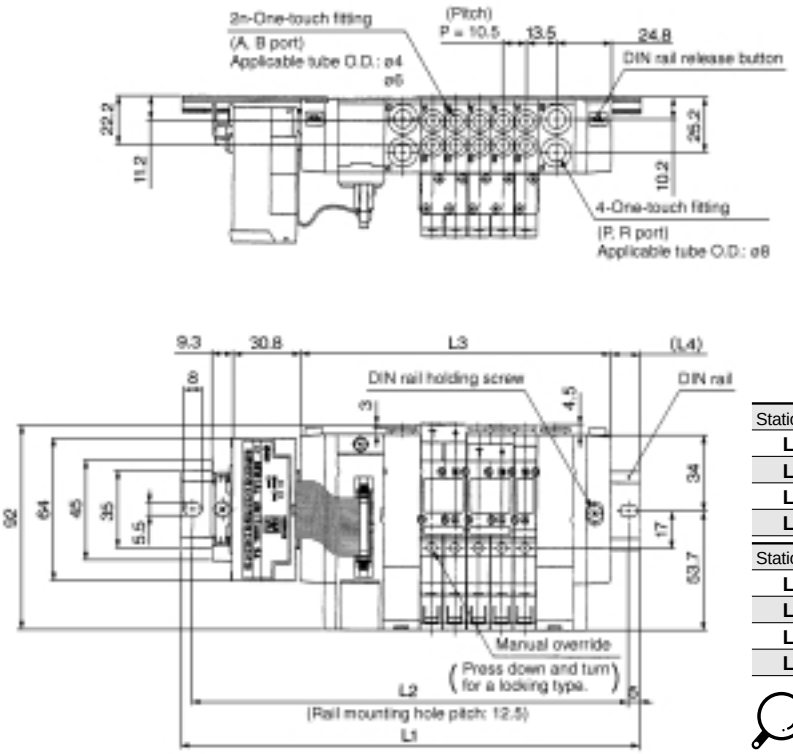

Stations n	2	3	4	5	6	7	8	9	10
L1	173	185.5	198	210.5	223	235.5	235.5	248	260.5
L2	162.5	175	187.5	200	212.5	225	225	237.5	250
L3	108	118.5	129	139.5	150	160.5	171	181.5	192
L4	12	13	14	15	16	17	12	13	14

Stations n	11	12	13	14	15	16
L1	273	285.5	298	298	310.5	323
L2	262.5	275	287.5	287.5	300	312.5
L3	202.5	213	223.5	234	244.5	255
L4	15	16	17	11.5	12.5	13.5

Note) The width of the SI unit will be 24.3mm longer for applications with E: Matsushita Electric Works or G: Rockwell Automation Contact SMC for details.

SS5Y3-45S1□D-Stations U-$^{C4}_{C6}$

Scale: 30%

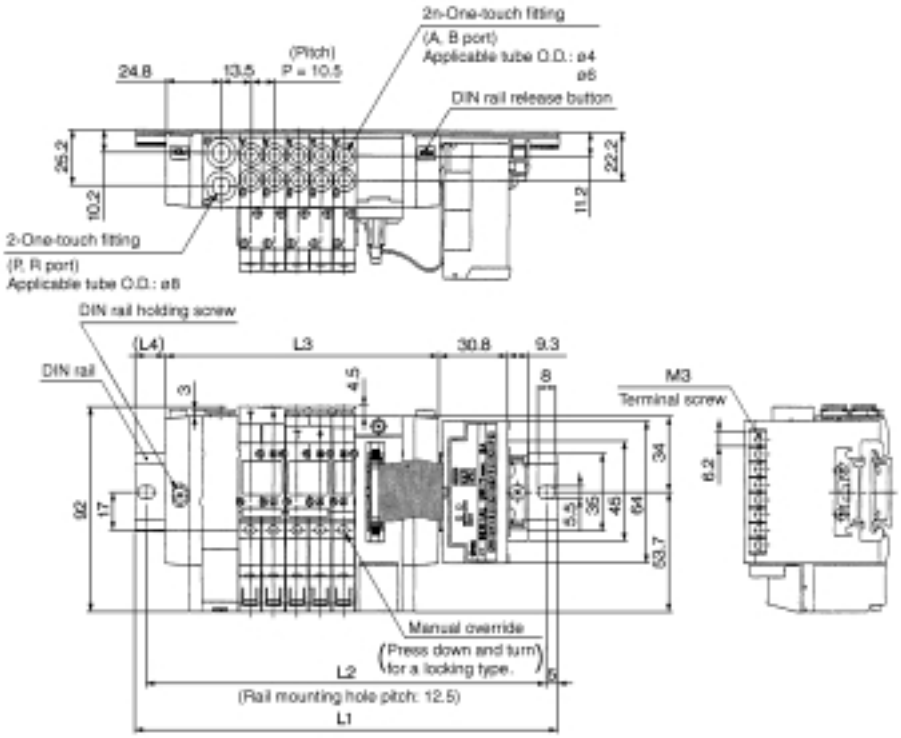

Note) Dimensions L1 to L4 of SS5Y3-45S1□D-Stations D-$^{C4}_{C6}$ are the same as SS5Y3-45S1□D-Stations U-$^{C4}_{C6}$.

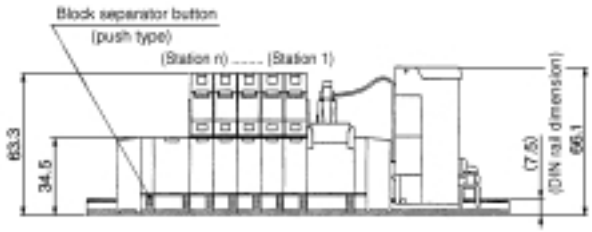

Stations n	2	3	4	5	6	7	8	9	10
L1	160.5	173	185.5	198	198	210.5	223	235.5	248
L2	150	162.5	175	187.5	187.5	200	212.5	225	237.5
L3	91.5	102	112.5	123	133.5	144	154.5	165	175.5
L4	14	15	16	17	12	13	14	15	16

Note) The width of the SI unit will be 24.3mm longer for applications with E: Matsushita Electric Works or G: Rockwell Automation Contact SMC for details.

SS5Y3-45S1□D-Stations B-$^{C4}_{C6}$

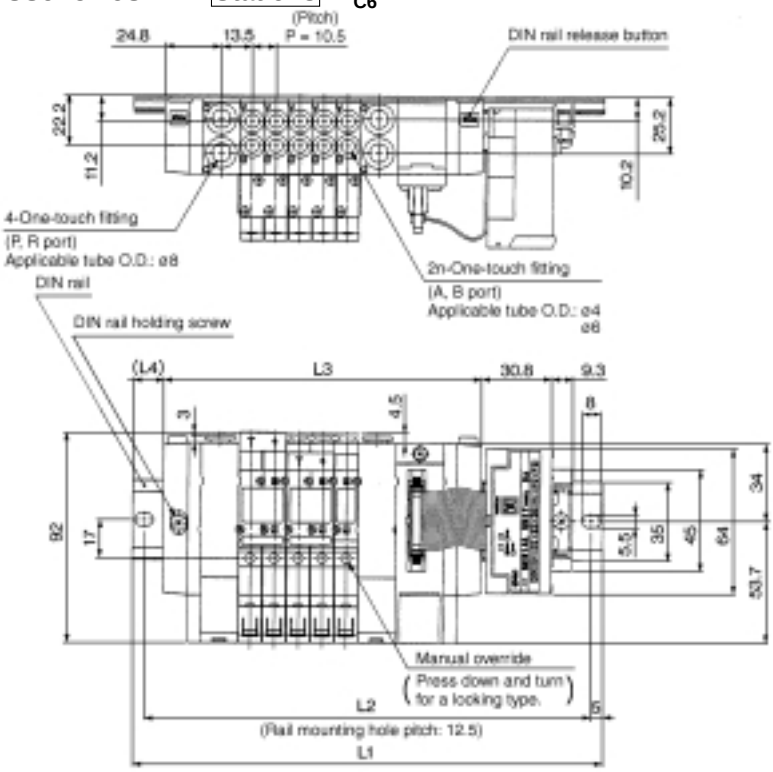

Stations n	2	3	4	5	6	7	8	9	10
L1	173	185.5	198	210.5	223	235.5	235.5	248	260.5
L2	162.5	175	187.5	200	212.5	225	225	237.5	250
L3	108	118.5	129	139.5	150	160.5	171	181.5	192
L4	12	13	14	15	16	17	12	13	14

Stations n	11	12	13	14	15	16
L1	273	285.5	298	298	310.5	323
L2	262.5	275	287.5	287.5	300	312.5
L3	202.5	213	223.5	234	244.5	255
L4	15	16	17	11.5	12.5	13.5

Note) The width of the SI unit will be 24.3mm longer for applications with E: Matsushita Electric Works or G: Rockwell Automation Contact SMC for details.

Series SY5000: Serial Transmission/Plug-in

SS5Y5-45S1□U-Stations D-C4/C6/C8

Scale: 30%

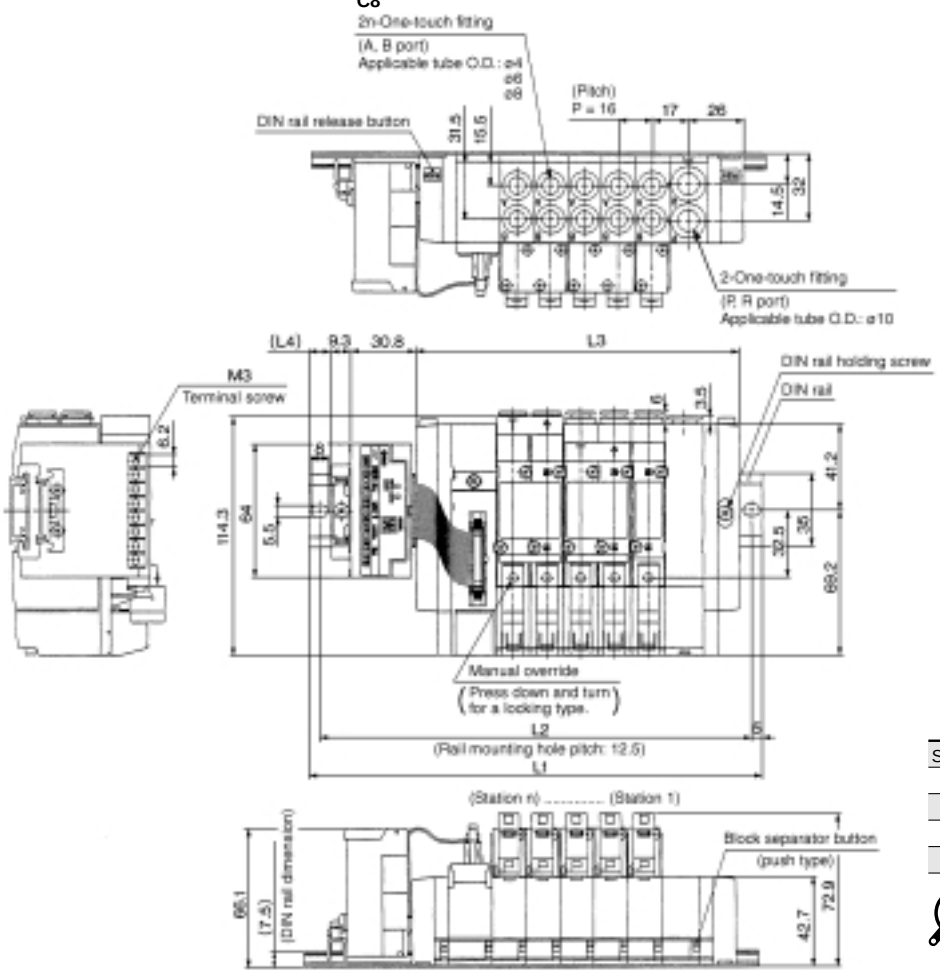

Note) Dimensions L1 to L4 of SS5Y5-45S1□U-Stations U-C4/C6/C8 are the same as SS5Y5-45S1□U-Stations D-C4/C6/C8.

Stations n	2	3	4	5	6	7	8	9	10
L1	173	185.5	210.5	223	235.5	260.5	273	285.5	298
L2	162.5	175	200	212.5	225	250	262.5	275	287.5
L3	105	121	137	153	169	185	201	217	233
L4	13.5	12	16.5	14.5	13	17.5	15.5	14	12

Note) The width of the SI unit will be 24.3mm longer for applications with E: Matsushita Electric Works or G: Rockwell Automation Contact SMC for details.

SS5Y5-45S1□U-Stations B-C4/C6/C8

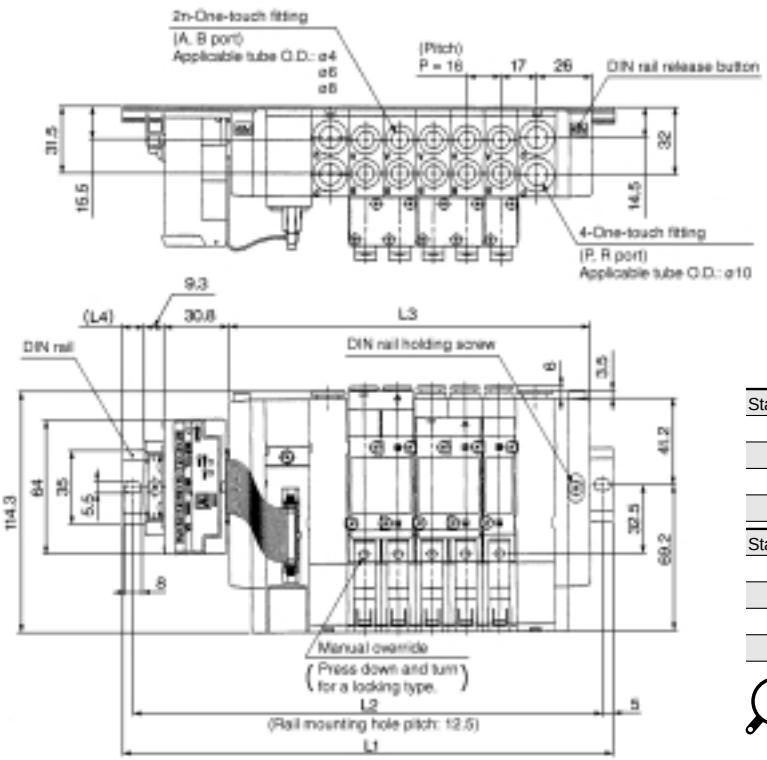

Stations n	2	3	4	5	6	7	8	9	10
L1	198	210.5	223	235.5	260.5	273	285.5	310.5	323
L2	187.5	200	212.5	225	250	262.5	275	300	312.5
L3	123	139	155	171	187	203	219	235	251
L4	17	15.5	13.5	12	16.5	14.5	13	17.5	15.5

Stations n	11	12	13	14	15	16
L1	335.5	348	373	385.5	398	410.5
L2	325	337.5	362.5	375	387.5	400
L3	267	283	299	315	331	347
L4	14	12	16.5	15	13	11.5

Note) The width of the SI unit will be 24.3mm longer for applications with E: Matsushita Electric Works or G: Rockwell Automation Contact SMC for details.

SS5Y5-45S1□D-Stations U-C4/C6/C8

Scale: 30%

Note) Dimensions L1 to L4 of SS5Y5-45S1□D-Stations D-C4/C6/C8 are the same as SS5Y5-45S1□D-Stations U-C4/C6/C8.

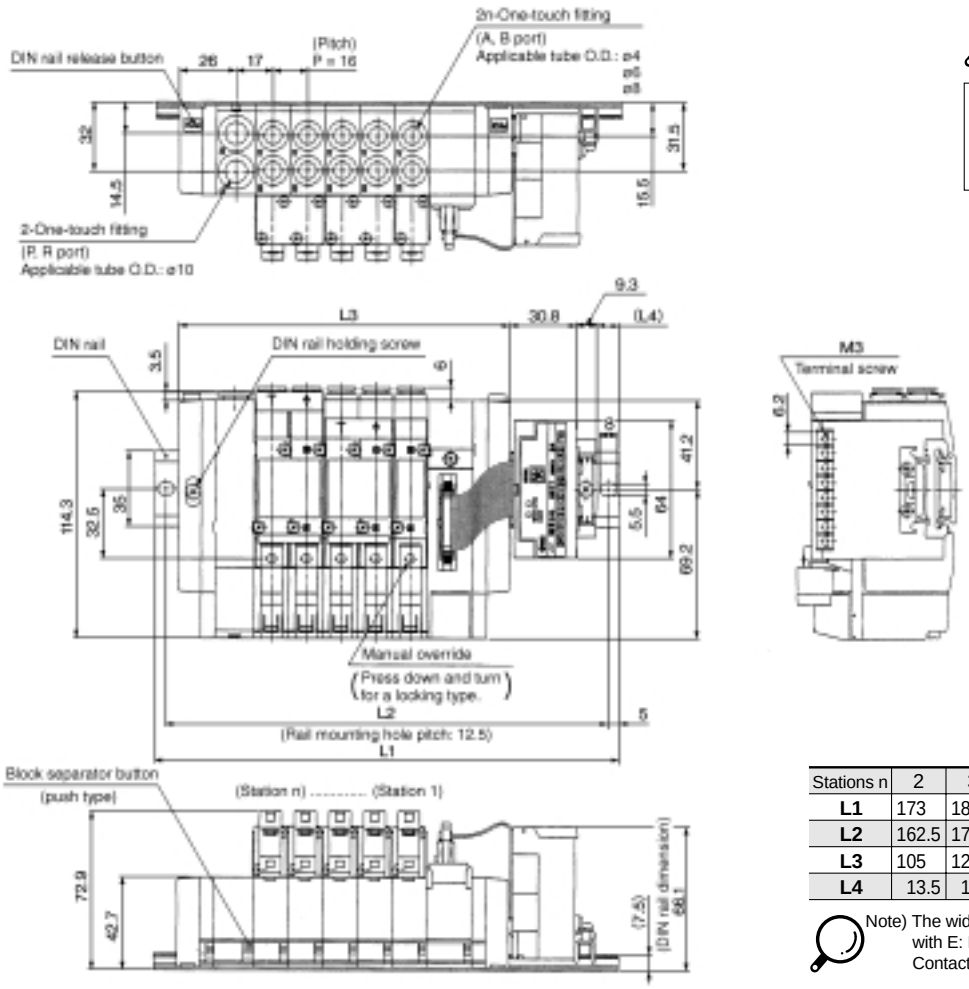

Stations n	2	3	4	5	6	7	8	9	10
L1	173	185.5	210.5	223	235.5	260.5	273	285.5	298
L2	162.5	175	200	212.5	255	250	262.5	275	287.5
L3	105	121	137	153	169	185	201	217	233
L4	13.5	12	16.5	14.5	13	17.5	15.5	14	12

Note) The width of the SI unit will be 24.3mm longer for applications with E: Matsushita Electric Works or G: Rockwell Automation Contact SMC for details.

SS5Y5-45S1□D-Stations B-C4/C6/C8

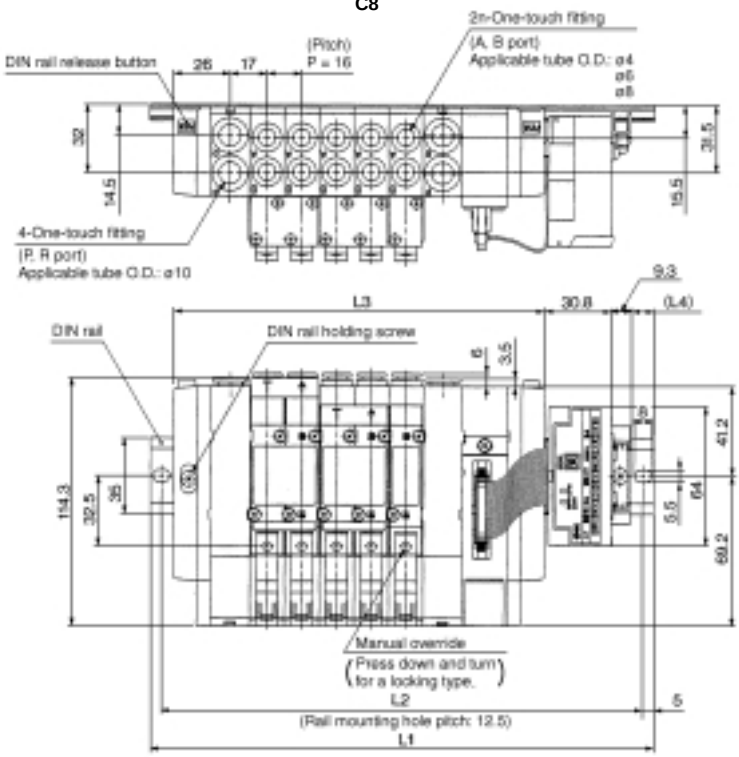

Stations n	2	3	4	5	6	7	8	9	10
L1	198	210.5	223	235.5	260.5	273	285.5	310.5	323
L2	187.5	200	212.5	225	250	262.5	275	300	312.5
L3	123	139	155	171	187	203	219	235	251
L4	17	15.5	13.5	12	16.5	14.5	13	17.5	15.5

Stations n	11	12	13	14	15	16
L1	335.5	348	373	385.5	398	410.5
L2	325	337.5	362.5	375	387.5	400
L3	267	283	299	315	331	347
L4	14	12	16.5	15	13	11.5

Note) The width of the SI unit will be 24.3mm longer for applications with E: Matsushita Electric Works or G: Rockwell Automation Contact SMC for details.

SY300/5000
3 Port Valve/Mixed Mounting Style on 5 Port valve Manifold

3 port valve can be mounted on manifol for 5 port valve.

Applicable Manifolds

Can be mounted on all manifold types in series SY3000/5000.
For manifold part numbers, refer to "How to Order Manifold" pages for each series.

How to Order Manifold Assemblies (Example)

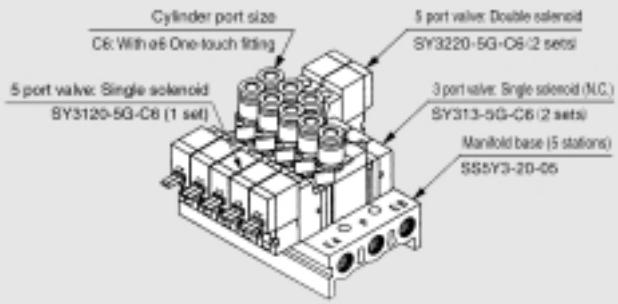

SS5Y3-20-05 ..... 1 set (Type 20, 5 station manifold base part no.)
∗ SY313-5G-C6 …… 2 sets (3 port valve, N.C. type part no.)
∗ SY3120-5G-C6 ..... 1 set (5 port valve, single solenoid part no.)
∗ SY3220-5G-C6 ..... 2 sets (5 port valve, double solenoid part no.)

To order valves and options mounted onto the manifold at the factory, list the valve/option with an asterisk (∗) in front of each part number.

Add the valve and option part numbers in order starting from the first station as shown above. When entry of part numbers becomes complicated, indicate on a manifold specification sheet.

Body Ported/How to Order Valves

Individual wiring: SS5Y$^{3}_{5}$-Type 20

SY 5 1 3 ☐ – 5 L ☐ ☐ – 01

Series

3	SY300
5	SY500

Type of actuation

1	Normally closed (N.C.)
2	Normally open (N.O.)

Solenoid type

Nil	Single solenoid
D	Double solenoid

Rated voltage

DC specifications

5	24VDC
6	12VDC
V	6VDC
S	5VDC
R	3VDC

AC specifications

1	100VAC
2	200VAC
3	110VAC [115VAC]
4	220VAC [230VAC]

Manual override

Nil	Non-locking push type
D	Push-turn locking slotted type
E	Push-turn locking lever type

A/B port size

Symbol	Port size	Applicable series
M5	M5 x 0.8	SY300
C4	ø4 One-touch fitting	
C6	ø6 One-touch fitting	
01	Rc 1/8	SY500
C4	ø4 One-touch fitting	
C6	ø6 One-touch fitting	
C8	ø8 One-touch fitting	

Indicator light/Surge voltage suppressor

Electrical entry G, H, L, M

Nil	Without indicator light/surge voltage suppressor
S	With surge voltage suppressor
Z	With indicator light/surge voltage suppressor
R	With surge voltage suppressor (non-polar type)
U	With indicator light/surge voltage suppressor (non-polar type)

Note 1) For AC, there is no "S" specification, since it is integrated with the rectifier.
Note 2) "R" and "U" are available for DC only.

Electrical entry D (SY500 only)

Nil	Without indicator light/surge voltage suppressor
S	With surge voltage suppressor
Z	With indicator light/surge voltage suppressor

Note 1) "DOZ" is not available.
Note 2) For AC, there is no "S" specification, since it is integrated with the rectifier.

Electrical entry

24V, 12V, 6V, 5V, 3VDC/100V, 110V, 200V, 220VAC			24V, 12VDC, 100V 110VAC, 200V, 220VAC
Grommet	**L type plug connector**	**M type plug connector**	**DIN terminal (SY500 only)**
G: Lead wire length 300mm **H:** Lead wire length 600mm	**L:** With lead wire (length 300mm) **LN:** Without lead wire **LO:** Without connector	**M:** With lead wire (length 300mm) **MN:** Without lead wire **MO:** Without connector	**D:** With connector **DO:** Without connector

Note 1) "LN" and "MN" include 2 sockets.
Note 2) "D" and "DO" are not available for SY300.
Note 3) DIN43650C standard DIN terminal "Y" is also available. Refer to page 189 for details.

Note) When single body ported solenoid valves are ordered, manifold mounting bolts and gaskets are not included. Order them separately if necessary. (Refer to page 56 for details.)

Body Ported/How to Order Valves

Flat ribbon cable: SS5Y$^{3}_{5}$-Type 20P

For DC: SY 5 1 3 □ – 5 LO Z □ – □

For AC: SY 5 1 3 □ – 1 LOZ □ – □

Series

3	SY300
5	SY500

Type of actuation

1	Normally closed (N.C.)
2	Normally open (N.O.)

Solenoid type

Nil	Single solenoid
D	Double solenoid

Rated voltage

5	24VDC
6	12VDC

Rated voltage

1	100VAC
3	110VAC [115VAC]

Indicator light/Surge voltage suppressor

Z	With indicator light/surge voltage suppressor
U	With indicator light/surge voltage suppressor (non-polar type)

Note) With "Z", only positive common specification is available.

A/B port size

Symbol	Port size	Applicable series
M5	M5 x 0.8	SY300
C4	ø4 One-touch fitting	
C6	ø6 One-touch fitting	
01	Rc 1/8	SY500
C4	ø4 One-touch fitting	
C6	ø6 One-touch fitting	
C8	ø8 One-touch fitting	

Manual override

Nil	Non-locking push type
D	Push-turn locking slotted type
E	Push-turn locking lever type

Base Mounted/How to Order Valves

Individual wiring: SS5Y$^{3}_{5}$-Type 41/42/45

SY 5 1 5 □ □ – 5 L □ □

Series

3	SY300
5	SY500

Type of actuation

1	Normally closed (N.C.)
2	Normally open (N.O.)

Solenoid type

Nil	Single solenoid
D	Double solenoid

Pilot type

Nil	Internal pilot
R	External pilot

∗ External pilot cannot be used on a type 41 manifold.

Rated voltage

DC specifications

5	24VDC
6	12VDC
V	6VDC
S	5VDC
R	3VDC

AC specifications

1	100VAC
2	200VAC
3	110VAC [115VAC]
4	220VAC [230VAC]

Manual override

Nil	Non-locking push type
D	Push-turn locking slotted type
E	Push-turn locking lever type

Indicator light/Surge voltage suppressor

Electrical entry G, H, L, M

Nil	Without indicator light/surge voltage suppressor
S	With surge voltage suppressor
Z	With indicator light/surge voltage suppressor
R	With surge voltage suppressor (non-polar type)
U	With indicator light/surge voltage suppressor (non-polar type)

Note 1) For AC, there is no "S" specification, since it is integrated with the rectifier.
Note 2) "R" and "U" are available for DC only.

Electrical entry D (SY500 only)

Nil	Without indicator light/surge voltage suppressor
S	With surge voltage suppressor
Z	With indicator light/surge voltage suppressor

Note 1) "DOZ" is not available.
Note 2) For AC, there is no "S" specification, since it is integrated with the rectifier.

Electrical entry

24V, 12V, 6V, 5V, 3VDC/100V, 110V, 200V, 220VAC			24V, 12VDC, 100V 110VAC, 200V, 220VAC
Grommet	**L type plug connector**	**M type plug connector**	**DIN terminal (SY500 only)**
G: Lead wire length 300mm **H:** Lead wire length 600mm	**L:** With lead wire (length 300mm) **LN:** Without lead wire **LO:** Without connector	**M:** With lead wire (length 300mm) **MN:** Without lead wire **MO:** Without connector	**D:** With connector **DO:** Without connector

Note 1) "LN" and "MN" include 2 sockets.
Note 2) "D" and "DO" are not available for SY300.
Note 3) DIN43650C standard DIN terminal "Y" is also available. Refer to page 189 for details.

Base Mounted/How to Order Valves

Flat ribbon cable: Connector box: SS5Y$^{3}_{5}$-Type 41P/42P/45-A

41P/42P/45-A for DC: SY 5 1 5 □ □ – 5 LO Z □

41P/42P for AC: SY 5 1 5 □ □ – 1 LOZ □

Rated voltage

5	24VDC
6	12VDC

Indicator light/Surge voltage suppressor

Z	With indicator light/ surge voltage suppressor
U	With indicator light/ surge voltage suppressor (non-polar type)

Note) With "Z", only positive common specification is available.

Series

3	SY300
5	SY500

Type of actuator

1	Normally closed (N.C.)
2	Normally open (N.O.)

Solenoid type

Nil	Single solenoid
D	Double solenoid

Manual override

Nil	Non-locking push type
D	Push-turn locking slotted type
E	Push-turn locking lever type

Rated voltage

1	100VAC
3	110VAC [115VAC]

Pilot type

Nil	Internal pilot
R	External pilot

∗ External pilot cannot be used on a type 41P manifold.

Plug-in: SS5Y$^{3}_{5}$-Type 45□

Single solenoid: SY 5 1 5 □ – 5 FU □

Double solenoid: SY 5 1 5C □ – 5 FU □

Series

3	SY300
5	SY500

Type of actuator

1	Normally closed (N.C.)
2	Normally open (N.O.)

Dual body type

Note) Since double solenoid valves (dual body type) require 2 manifold stations, be sure to specify appropriate number of stations with the manifold part number.

Manual override

Nil	Non-locking push type
D	Push-turn locking slotted type
E	Push-turn locking lever type

Rated voltage

DC specifications

5	24VDC
6	12VDC

Pilot type

Nil	Internal pilot
R	External pilot

Construction

Symbol
Single

Normally closed (N.C.)
Single solenoid

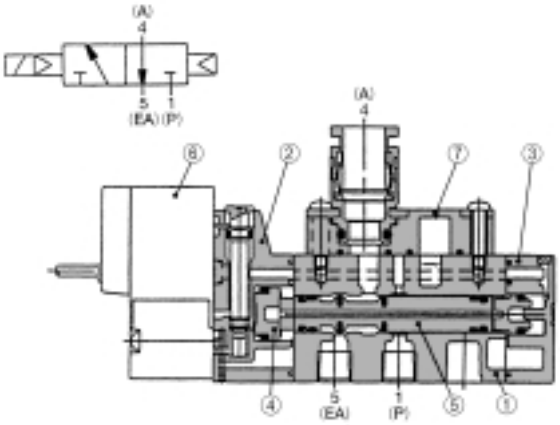

Symbol
Double

Normally closed (N.C.)
Double solenoid

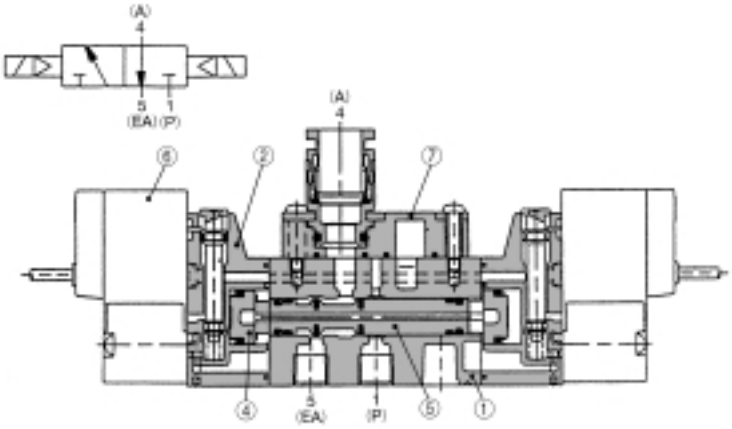

Symbol
Single

Normally open (N.O.)
Single solenoid

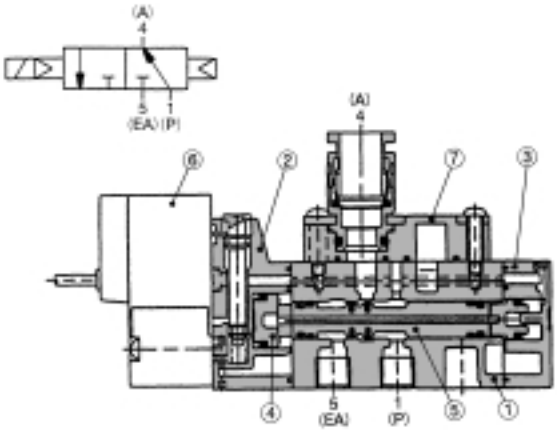

Symbol
Double

Normally open (N.O.)
Double solenoid

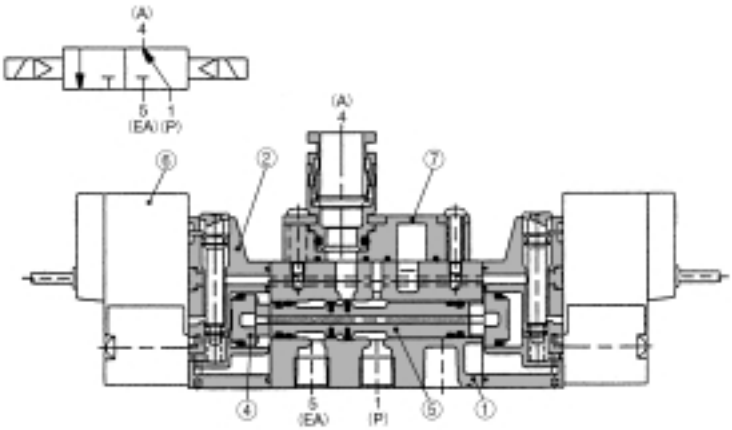

Parts list

No.	Description	Material	Note
1	Body	Die-cast aluminum (SY300 is die-cast zinc.)	White
2	Adaptor plate	Resin	White
3	End plate	Resin	White
4	Piston	Resin	—
5	Spool valve assembly	Aluminum/NBR	—

Replacement parts

No.	Description	Part no.
6	Pilot valve assembly	Refer to "How to Order Pilot Valve Assemblies" on page 5.
7	Port block assembly	Refer to "How to Order Port Block Assemblies" below.

How to Order Port Block Assemblies

SY □ 00 — 2A — □

Series

3	SY300
5	SY500

A/B port size

Symbol	Port size	Applicable series
M5	M5 x 0.8	SY300
C4	ø4 One-touch fitting	
C6	ø6 One-touch fitting	
01	Rc 1/8	SY500
C4	ø4 One-touch fitting	
C6	ø6 One-touch fitting	
C8	ø8 One-touch fitting	

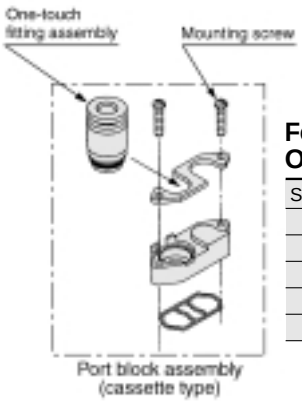

For replacement of One-touch fitting assembly only

Symbol	Part no.	Applicable series
C4	VVQ1000-50A-C4	SY300
C6	VVQ1000-50A-C6	
C4	VVQ1000-51A-C4	SY500
C6	VVQ1000-51A-C6	
C8	VVQ1000-51A-C8	

Specifications

Dimensions, specifications, solenoid specifications, response time, and effective area are the same as 5 port valves.

Weights

Models/Series SY300

Valve model	Type of actuation	Weight g	
		Grommet	L/M type plug connector
SY3□3-□□-M5	Single	48	51
	Double	63	70
SY3□3-□□-C4	Single	53	57
	Double	68	75
SY3□3-□□-C6	Single	51	55
	Double	66	73
SY3□5-□□	Single	44	48
	Double	59	66

Models/Series SY300

Valve model	Type of actuation	Weight g		
		Grommet	L/M type plug connector	DIN terminal
SY5□3-□-01	Single	66	70	93
	Double	81	89	135
SY5□3-□-C4	Single	79	80	103
	Double	94	98	144
SY5□3-□-C6	Single	76	75	98
	Double	91	94	140
SY5□3-□-C8	Single	72	82	105
	Double	87	101	147
SY5□5-□□	Single	52	56	79
	Double	67	74	120

5 Port Air Operated Valve
SYA3000/5000/7000

How to Order

A/B port size

Symbol	Port size	Applicable series
M5	M5 x 0.8	SYA3000
C4	ø4 One-touch fitting	
C6	ø6 One-touch fitting	
01	Rc 1/8	SYA5000
C4	ø4 One-touch fitting	
C6	ø6 One-touch fitting	
C8	ø8 One-touch fitting	
02	Rc 1/4	SYA7000
C8	ø8 One-touch fitting	
C10	ø10 One-touch fitting	

Bracket

Nil	Without bracket
F1	With foot bracket (2 position single type only)
F2	With side bracket

Body ported: SYA 5 1 20 — C6 — □

Base mounted: SYA 5 1 40 — □

Series

3	SYA3000
5	SYA5000
7	SYA7000

Type of actuation

1	2 position single 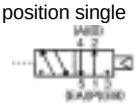
2	2 position double 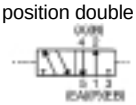
3	3 position closed center
4	3 position exhaust center
5	3 position pressure center

Port size

Symbol	Port size	Applicable series
Nil	Without sub-plate	
01	Rc 1/8 with sub-plate	SYA3000
02	Rc 1/4 with sub-plate	SYA5000 SYA7000
03	Rc 3/8 with sub-plate	SYA7000

How to Order Manifold Bases

Manifolds identical to the non-plug-in type manifolds for series SY are used. (Applicable to types 20, 41, 42, and 45)

SS5YA5-3/7 — Specify the order as for SS5Y5-3/7.

∗ Add the valve and option part numbers in order.
<Example>
SS5YA5-42-03-02 ..... 1 set (Type 42, 3 station manifold base part no.)
∗ SYA5140 ..... 1 set (Single air operated valve part no.)
∗ SYA5240 ..... 1 set (Double air operated valve part no.)
∗ SY5000-26-2A ..... 1 set (Blanking plate assembly part no.)

To order valves and options mounted onto the manifold at the factory, list the valve/option with an asterisk (∗) in front of each part number.

Note) When single body ported air operated valves are ordered, manifold mounting bolts and gaskets are not included. Order them separately if necessary. (Refer to page 56 for details.)

Specifications

Fluid		Air
Operating pressure range MPa	2 position single	0.15 to 0.7
	2 position double	0.1 to 0.7
	3 position	0.2 to 0.7
Pilot pressure range MPa	2 position single	(0.7 x P + 0.1) to 0.7P: Operating pressure
	2 position double	0.1 to 0.7
	3 position	0.2 to 0.7
Ambient and fluid temperature °C		Maximum 60
Manual override		Non-locking push type
Lubrication		Non-lube
Mounting orientation		Unrestricted
Impact resistance/Vibration resistance m/s² Note)		150/30

Note) Impact resistance: No malfunction resulted from the impact test using a drop impact tester. The test was performed one time each in the axial and right angle directions of the main valve, for both ON and OFF states of the pilot signal. (Value in the initial stage)

Vibration resistance: No malfunction occurred in a one-sweep test between 8.3 and 2000Hz. Test was performed in the axial and right angle directions of the main valve for both ON and OFF states of the pilot signal. (Value in the initial stage)

Pilot pressure range for single pilot

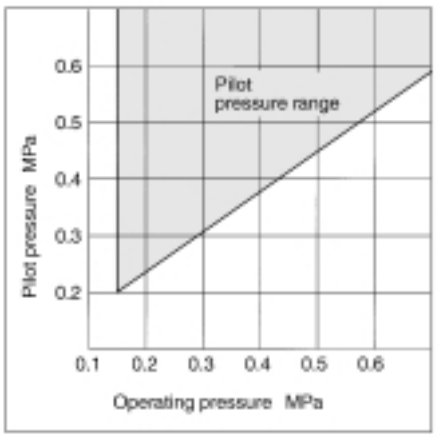

Models/Series SYA3□20 (Body ported)

Valve model	Type of actuation		Pilot port size	Port size		Effective area mm² (Cv factor) Note)		Weight g
				P, EA, EB	A, B	P to A/B	A/B to EA/EB	
SYA3□20-M5	2 position	Single	M5 x 0.8	M5 x 0.8	M5 x 0.8	3.6 (0.2)	3.78 (0.21)	35
		Double						37
	3 position	Closed center				3.6 (0.2)	3.42 (0.19)	39
		Exhaust center				3.6 (0.2)	3.78 (0.21) {2.7 (0.15)}	
		Pressure center				3.96 (0.22) {2.88 (0.16)}	3.6 (0.2)	
SYA3□20-C4	2 position	Single			C4 (ø4 One-touch fitting)	3.42 (0.19)	3.6 (0.2)	44
		Double						46
	3 position	Closed center				3.42 (0.19)	3.42 (0.19)	48
		Exhaust center				3.42 (0.19)	3.78 (0.21) {2.7 (0.15)}	
		Pressure center				3.6 (0.2) {2.16 (0.12)}	3.6 (0.2)	
SYA3□20-C6	2 position	Single			C6 (ø6 One-touch fitting)	3.6 (0.2)	4.14 (0.23)	40
		Double						42
	3 position	Closed center				3.6 (0.2)	3.96 (0.22)	44
		Exhaust center				3.78 (0.21)	4.5 (0.25) {3.06 (0.17)}	
		Pressure center				3.96 (0.22) {2.88 (0.16)}	3.96 (0.22)	

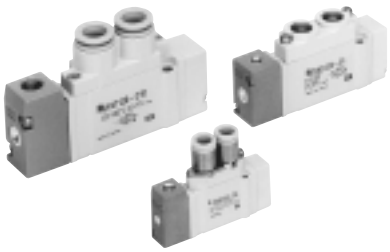

Note) Values inside { } are for normal position.

Models/Series SYA3□40 (Base mounted)

Valve model	Type of actuation		Pilot port size	Port size	Effective area mm² (Cv factor) Note 1)		Weight g Note 2)
					P to A/B	A/B to EA/EB	
SYA3□40-01	2 position	Single	M5 x 0.8	Rc 1/8	4.86 (0.27)	5.4 (0.3)	69 (34)
		Double					71 (36)
	3 position	Closed center			4.68 (0.26)	4.86 (0.27)	73 (38)
		Exhaust center			4.86 (0.27)	5.94 (0.33) {3.24 (0.18)}	
		Pressure center			6.66 (0.37) {3.24 (0.18)}	5.22 (0.29)	

Note 1) Values inside { } are for normal position.
Note 2) Values inside ( ) are for valves without sub-plate.

Models/Series SYA5□20 (Body ported)

Valve model	Type of actuation		Pilot port size	Port size		Effective area mm² (Cv factor) Note)		Weight g
				P, EA, EB	A, B	P to A/B	A/B to EA/EB	
SYA5□20-01	2 position	Single	M5 x 0.8	Rc 1/8	Rc 1/8	9.18 (0.15)	10.6 (0.59)	58
		Double						64
	3 position	Closed center				7.38 (0.41)	7.92 (0.44)	69
		Exhaust center				7.56 (0.42)	12.06 (0.67) {8.28 (0.46)}	
		Pressure center				10.62 (0.59) {4.32 (0.24)}	8.46 (0.47)	
SYA5□20-C4	2 position	Single			C4 (ø4 One-touch fitting)	5.5 (0.31)	3.9 (0.22)	82
		Double						87
	3 position	Closed center				5.3 (0.29)	3.9 (0.22)	93
		Exhaust center				5.3 (0.29)	3.9 (0.22)	
		Pressure center				5.7 (0.32)	3.9 (0.22)	
SYA5□20-C6	2 position	Single			C6 (ø6 One-touch fitting)	9 (0.5)	9 (0.5)	76
		Double						82
	3 position	Closed center				7.2 (0.4)	7.38 (0.41)	87
		Exhaust center				7.38 (0.41)	9.72 (0.54) {7.2 (0.4)}	
		Pressure center				10.62 (0.59) {4.32 (0.24)}	7.2 (0.4)	
SYA5□20-C8	2 position	Single			C8 (ø8 One-touch fitting)	9.18 (0.51)	9.9 (0.55)	68
		Double						74
	3 position	Closed center				7.38 (0.41)	7.92 (0.44)	79
		Exhaust center				7.38 (0.41)	11.88 (0.66) {7.74 (0.43)}	
		Pressure center				10.62 (0.59) {4.32 (0.24)}	7.92 (0.44)	

Note) Values inside { } are for normal position.

Models/Series SYA5□40 (Base mounted)

Valve model	Type of actuation		Pilot port size	Port size	Effective area mm² (Cv factor) Note 1)		Weight g Note 2)
					P to A/B	A/B to EA/EB	
SYA5□40-02	2 position	Single	M5 x 0.8	Rc 1/4	12.78 (0.71)	12.6 (0.7)	105 (42)
		Double					110 (47)
	3 position	Closed center			7.56 (0.42)	8.1 (0.45)	115 (52)
		Exhaust center			7.92 (0.44)	14.4 (0.8) {9 (0.5)}	
		Pressure center			15.84 (0.88) {4.5 (0.25)}	8.64 (0.48)	

Note 1) Values inside { } are for normal position.
Note 2) Values inside ( ) are for valves without sub-plate.

Models/Series SYA7□20 (Body ported)

Valve model	Type of actuation		Pilot port size	Port size		Effective area mm² (Cv factor) Note)		Weight g
				P, EA, EB	A, B	P to A/B	A/B to EA/EB	
SYA7□20-02	2 position	Single	Rc 1/8	P port: Rc 1/4 EA, EB ports: Rc 1/8	Rc 1/4	16.2 (0.9)	15.66 (0.87)	132
		Double						177
	3 position	Closed center				12.06 (0.67)	11.34 (0.63)	186
		Exhaust center				11.88 (0.66)	16.74 (0.93) {11.7 (0.65)}	
		Pressure center				17.1 (0.95) {11.16 (0.62)}	11.34 (0.63)	
SYA7□20-C8	2 position	Single			C8 (ø8 One-touch fitting)	13.86 (0.77)	13.68 (0.76)	138
		Double						183
	3 position	Closed center				11.52 (0.64)	10.44 (0.58)	192
		Exhaust center				11.16 (0.62)	14.4 (0.8) {10.8 (0.6)}	
		Pressure center				14.58 (0.81) {10.62 (0.59)}	10.44 (0.58)	
SYA7□20-C10	2 position	Single			C10 (ø10 One-touch fitting)	15.84 (0.88)	14.94 (0.83)	135
		Double						180
	3 position	Closed center				12.24 (0.68)	11.16 (0.62)	189
		Exhaust center				11.88 (0.66)	16.2 (0.89) {11.34 (0.63)}	
		Pressure center				16.74 (0.93) {11.16 (0.62)}	11.34 (0.63)	

Note) Values inside { } are for normal position.

Models/Series SYA7□40 (Base mounted)

Valve model	Type of actuation		Pilot port size	Port size	Effective area mm² (Cv factor) Note 1)		Weight g Note 2)
					P to A/B	A/B to EA/EB	
SYA7□40-02/03	2 position	Single	Rc 1/8	Rc 1/4 Rc 3/8	23.22 (1.29)	21.6 (1.2)	240 (111)
		Double					286 (157)
	3 position	Closed center			14.04 (0.78)	12.24 (0.68)	294 (165)
		Exhaust center			14.04 (0.78)	20.88 (1.16) {12.96 (0.72)}	
		Pressure center			24.48 (1.36) {13.5 (0.75)}	12.42 (0.69)	

Note 1) Values inside { } are for normal position and port size of Rc 3/8.
Note 2) Values inside ( ) are for valves without sub-plate.

Series SYA3000 (Body Ported) Dimensions

2 position single
SYA3120-$^{C4}_{C6}$(-F2)

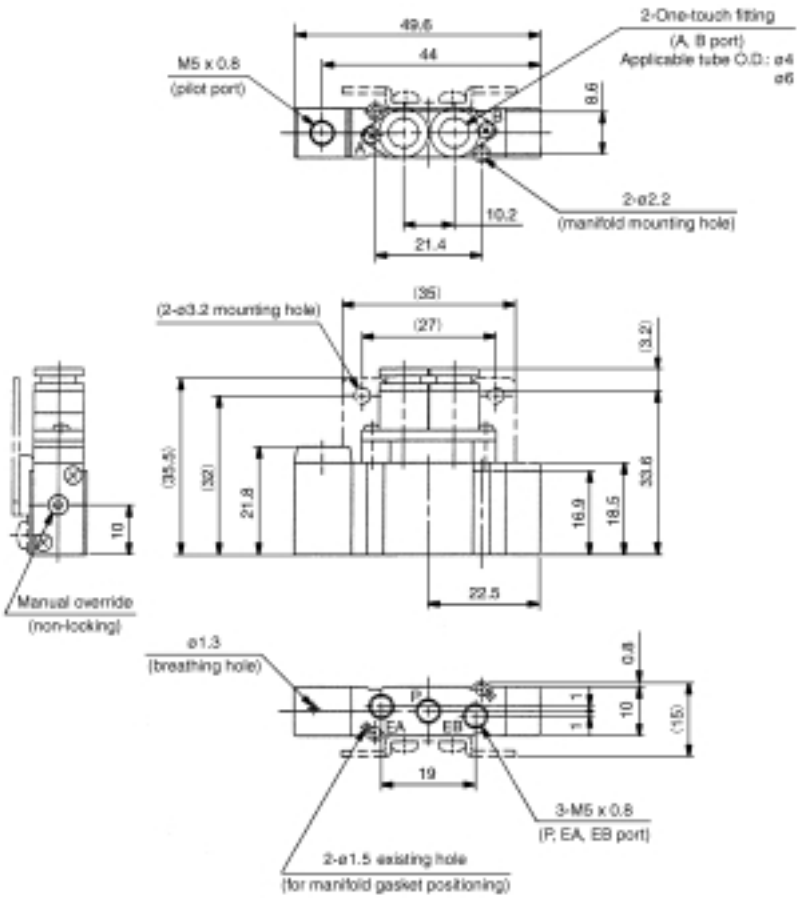

With foot bracket
SYA3120-$^{C4}_{C6}$-F1

Scale: 65%

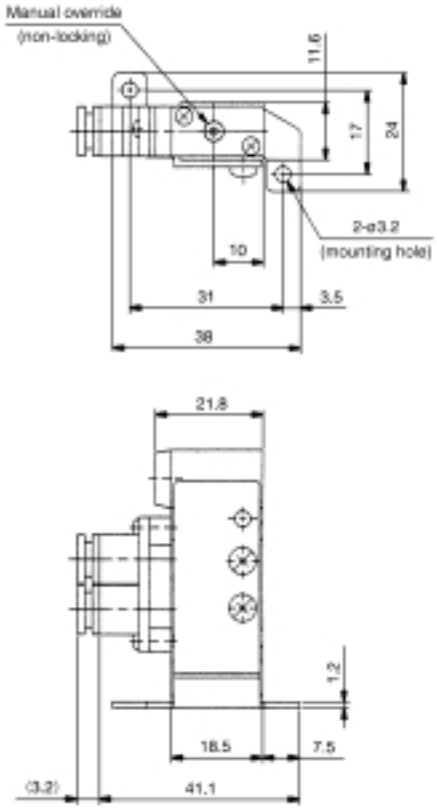

SYA3120-M5

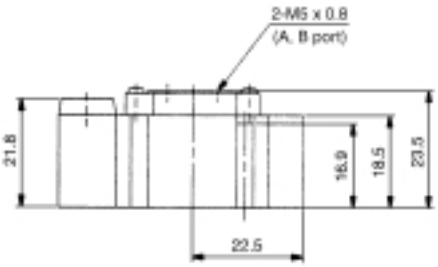

2 position double
SYA3220-$^{C4}_{C6}$(-F2)

Scale: 65%

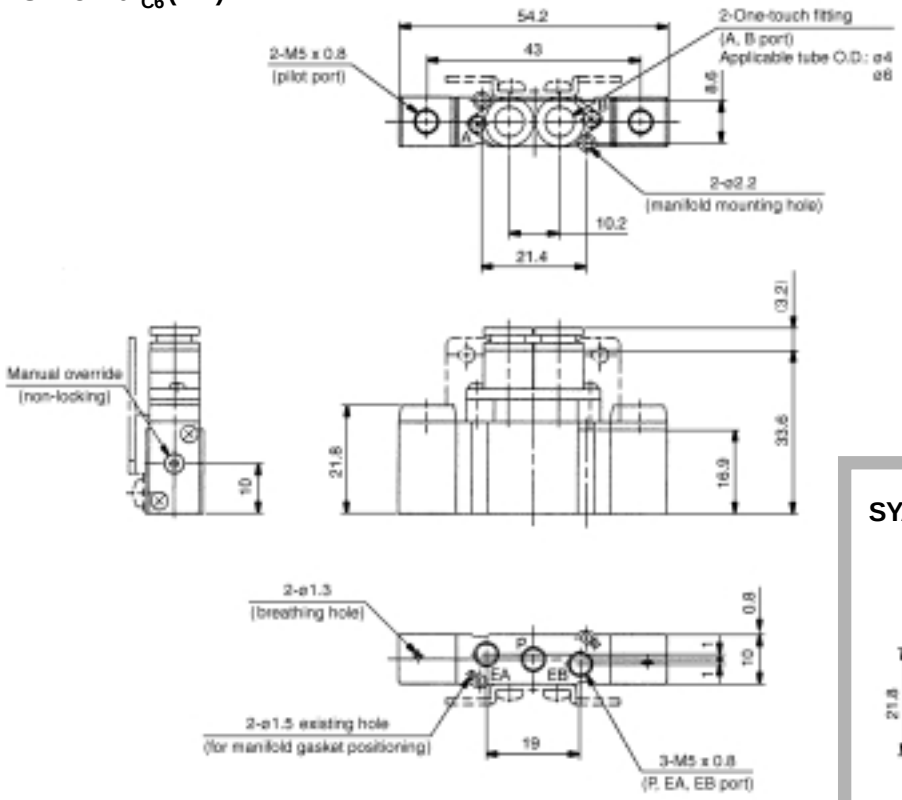

SYA3220-M5

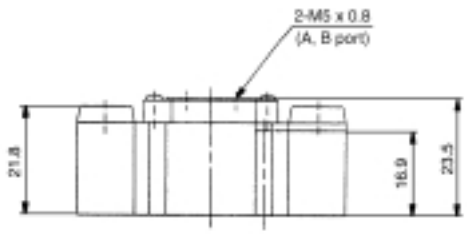

3 position closed center/exhaust center/pressure center
SYA3$^{3}_{4}_{5}$20-$^{C4}_{C6}$(-F2)

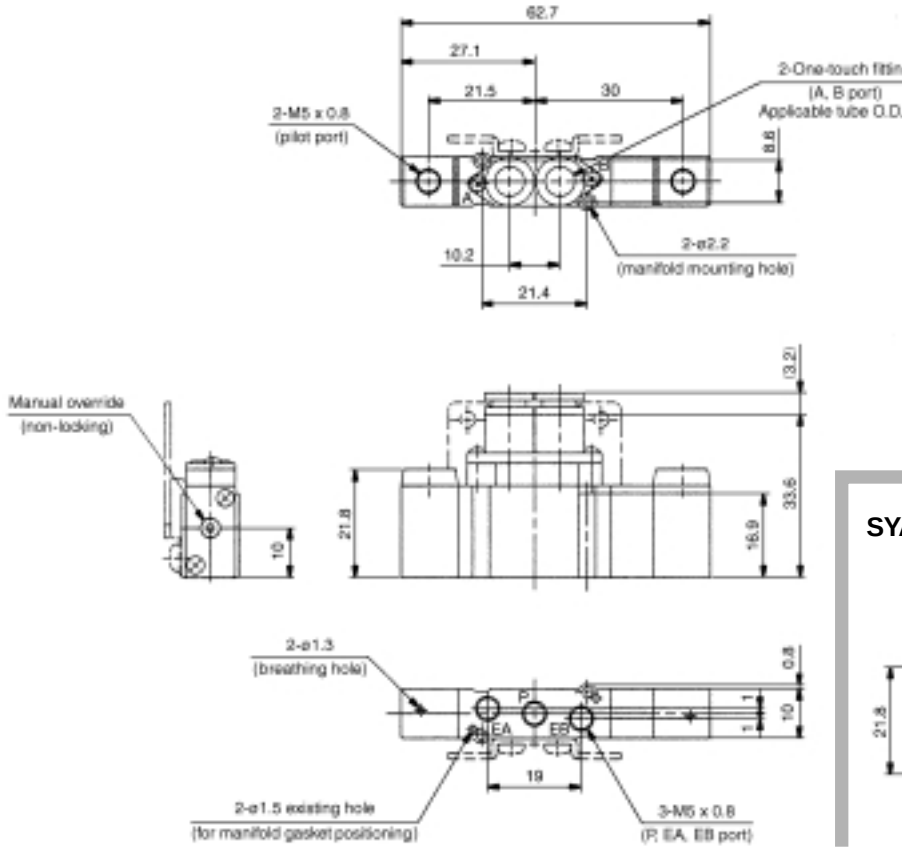

SYA3$^{3}_{4}_{5}$20-M5

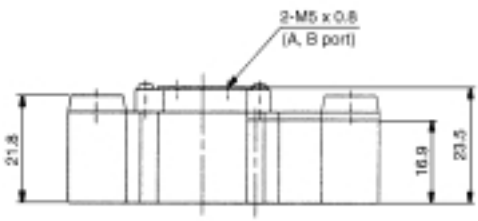

Series SYA3000 (Base Mounted) Dimensions

2 position single
SYA3140-01

Scale: 65%

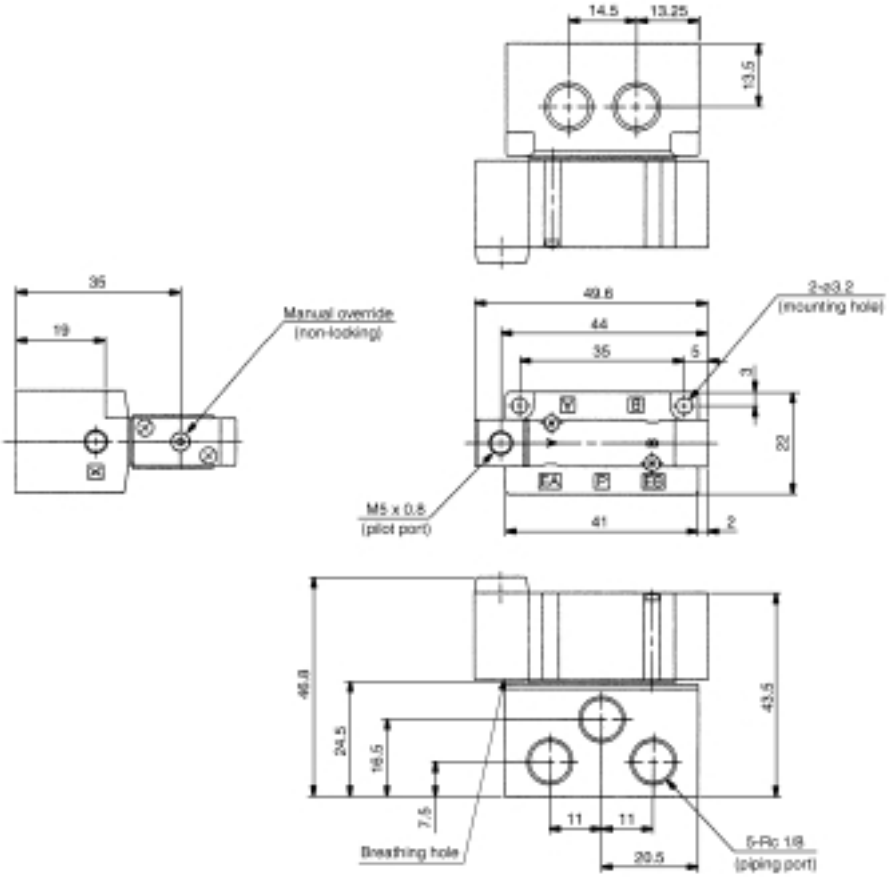

2 position double
SYA3240-01

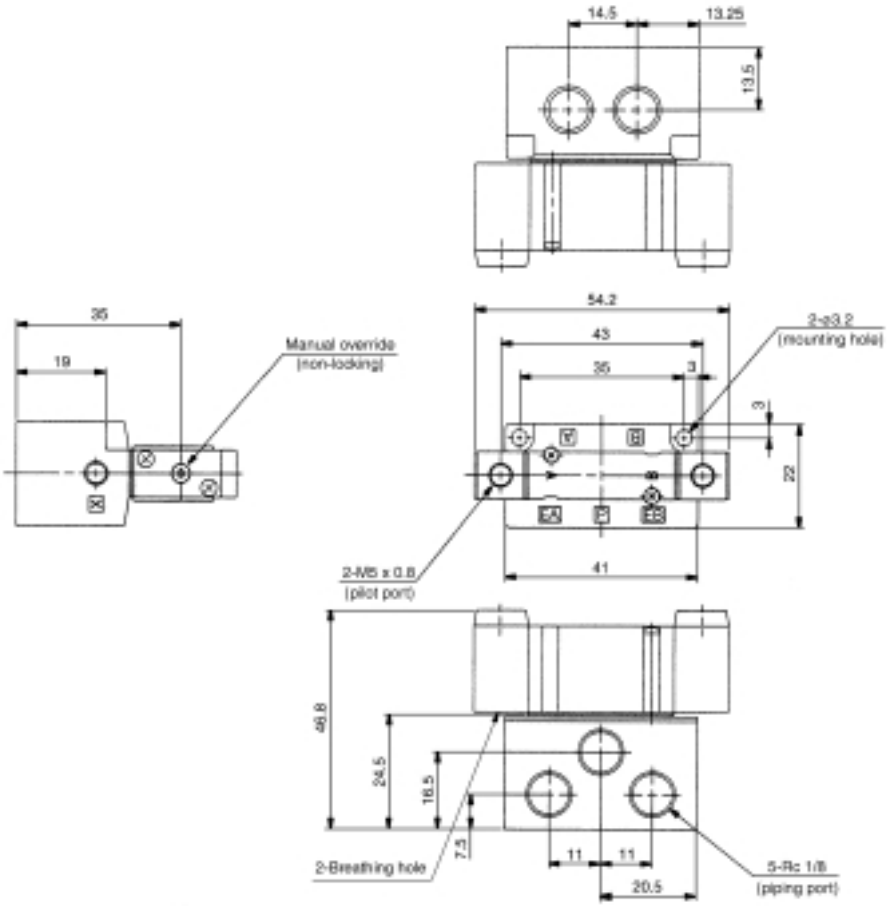

3 position closed center/exhaust center/pressure center
SYA3 $^{3}_{4}_{5}$ 40-01

Scale: 65%

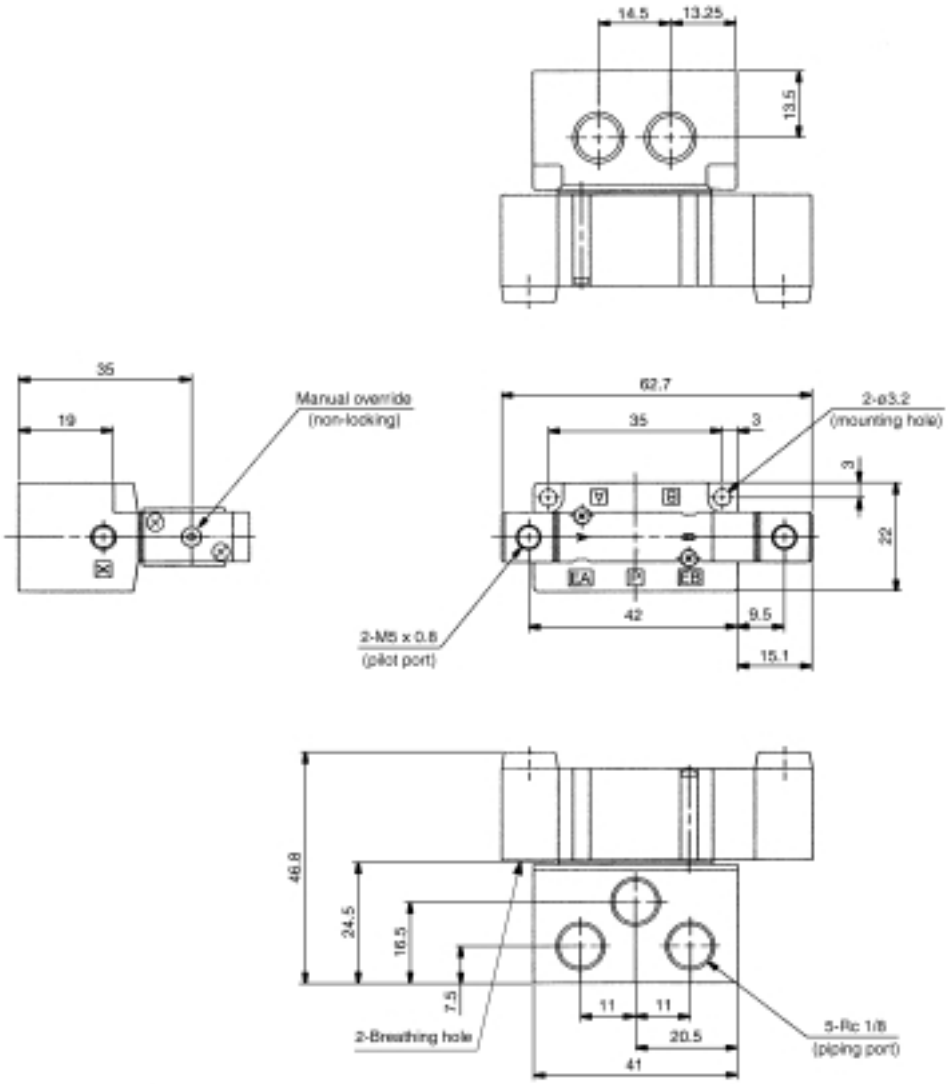

Series SYA5000 (Body Ported) Dimensions

2 position single
SYA5120-$^{C4}_{C6}_{C8}$(-F2)

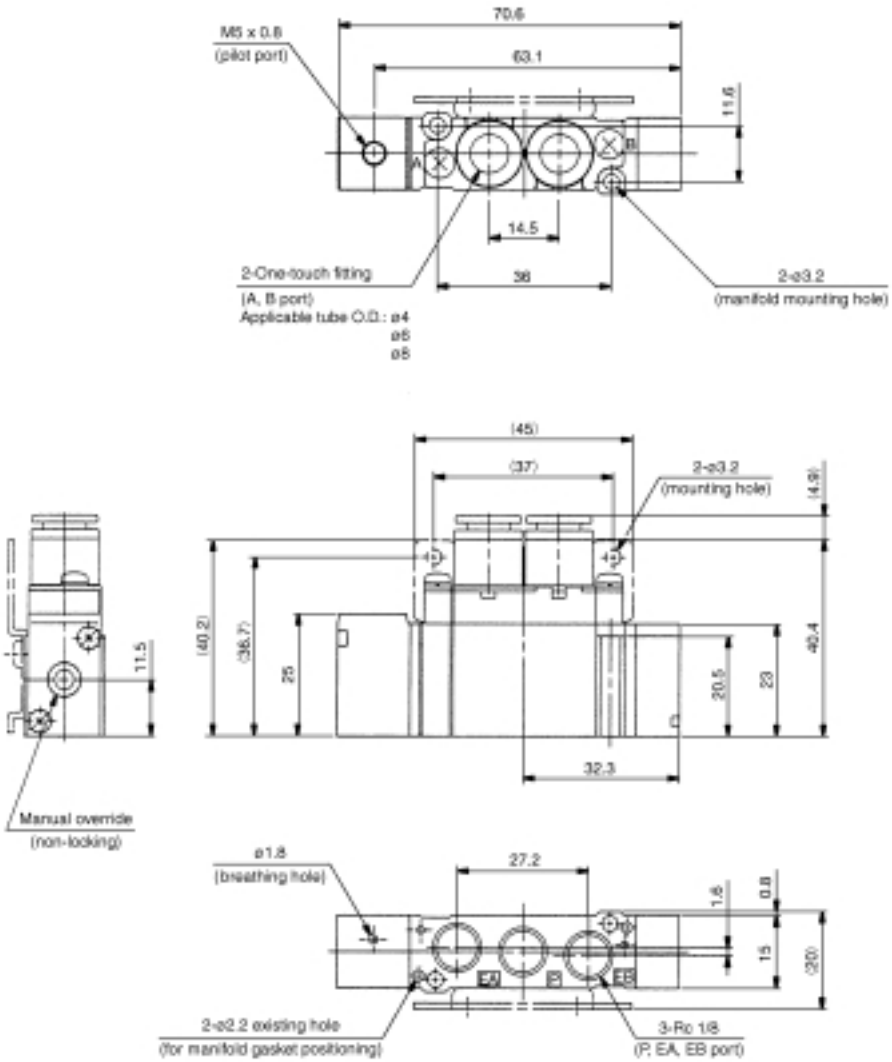

With foot bracket
SYA5120-$^{C4}_{C6}_{C8}$-F1

Scale: 65%

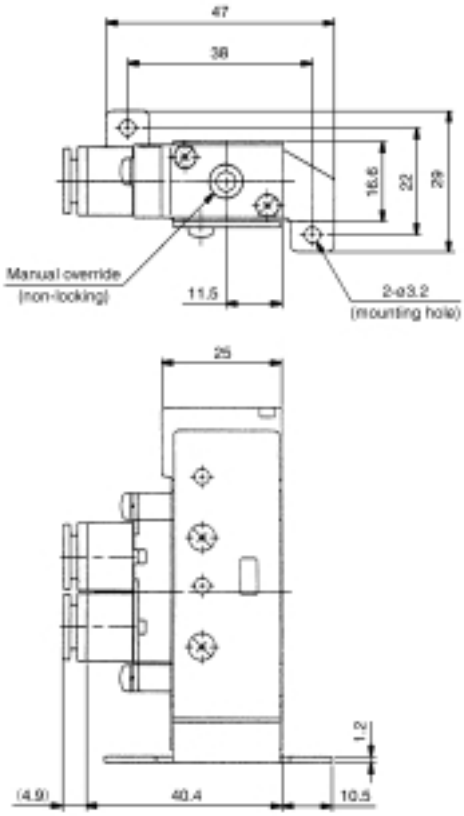

SYA5120-01

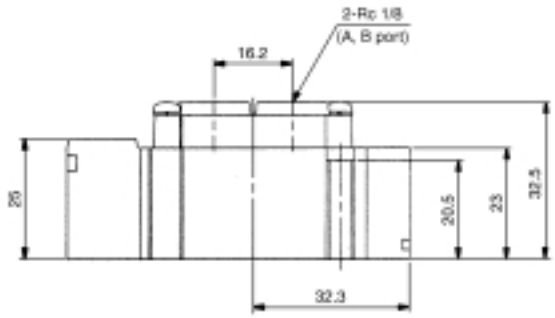

2 position double
SYA5220-C4/C6/C8(-F2)

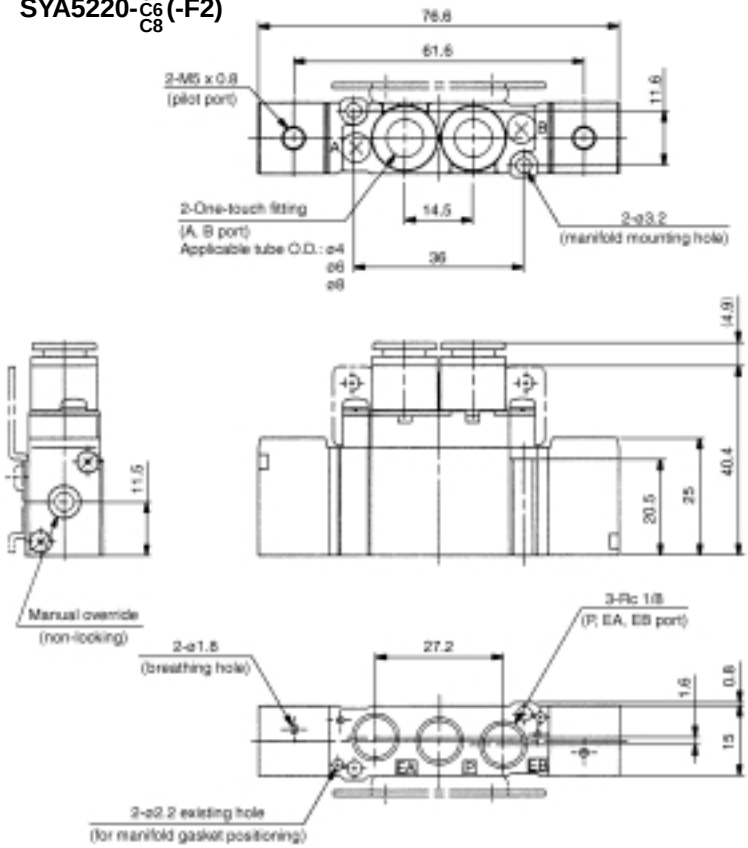

SYA5220-01

Scale: 65%

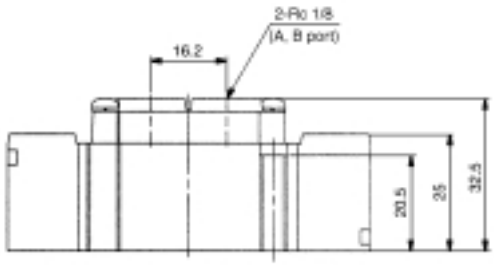

3 position closed center/exhaust center/pressure center
SYA5$^{3}_{4}_{5}$20-C4/C6/C8(-F2)

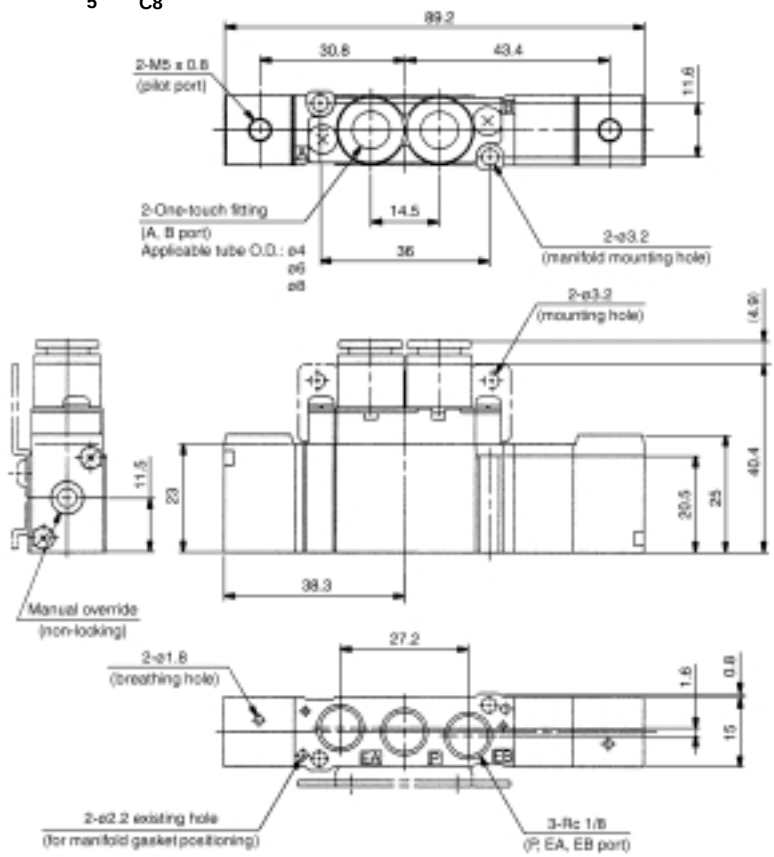

SYA5$^{3}_{4}_{5}$20-01

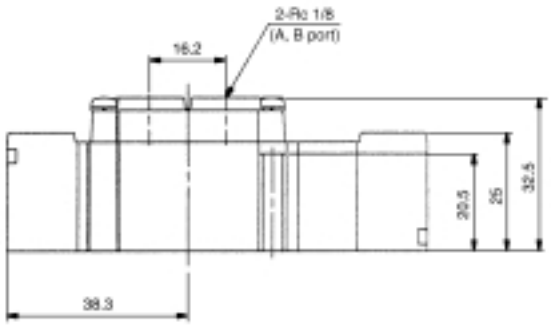

Series SYA5000 (Base Mounted) Dimensions

2 position single
SYA5140-02

Scale: 65%

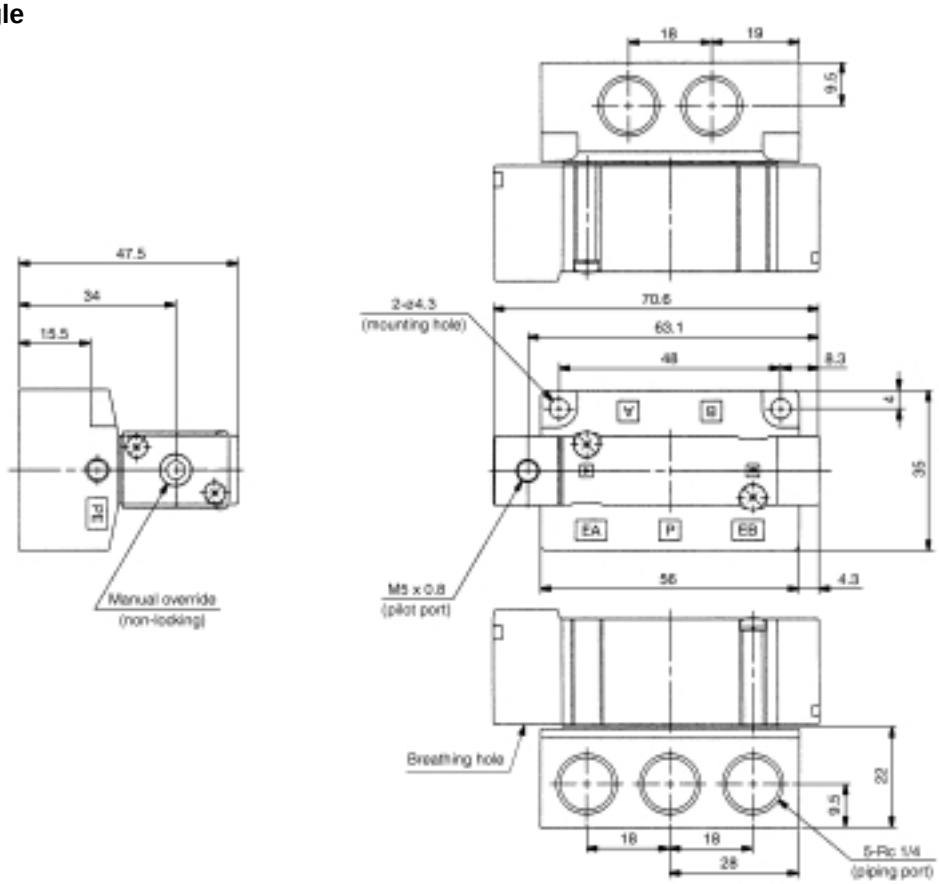

2 position double
SYA5240-02

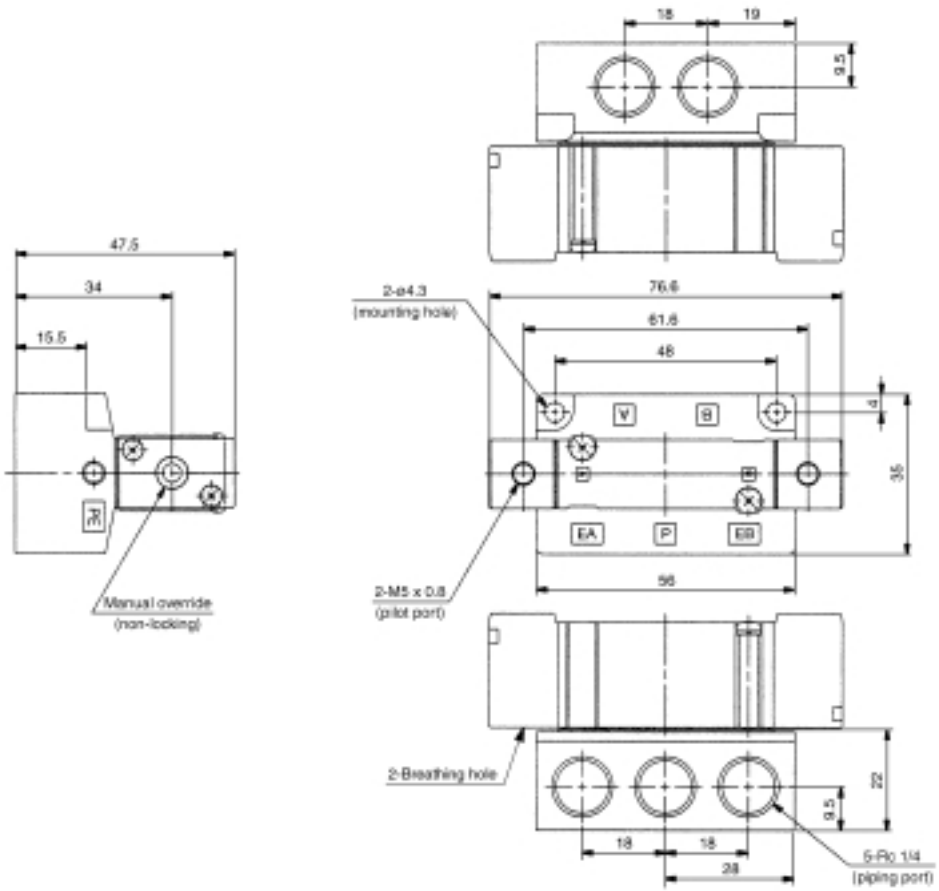

3 position closed center/exhaust center/pressure center
SYA5$^{3}_{4}_{5}$40-02

Scale: 65%

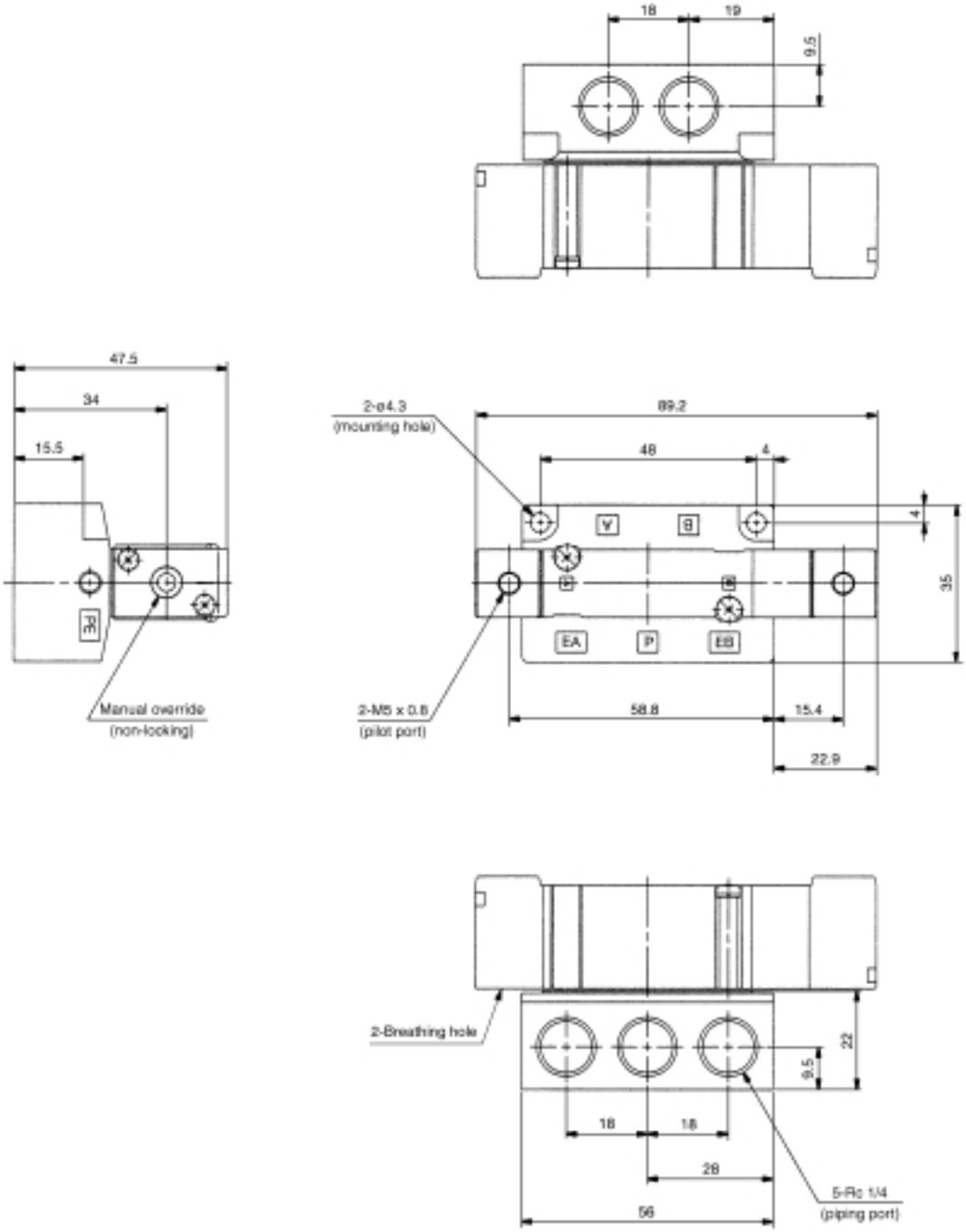

Series SYA7000 (Body Ported) Dimensions

2 position single
SYA7120-$^{C8}_{C10}$(-F2)

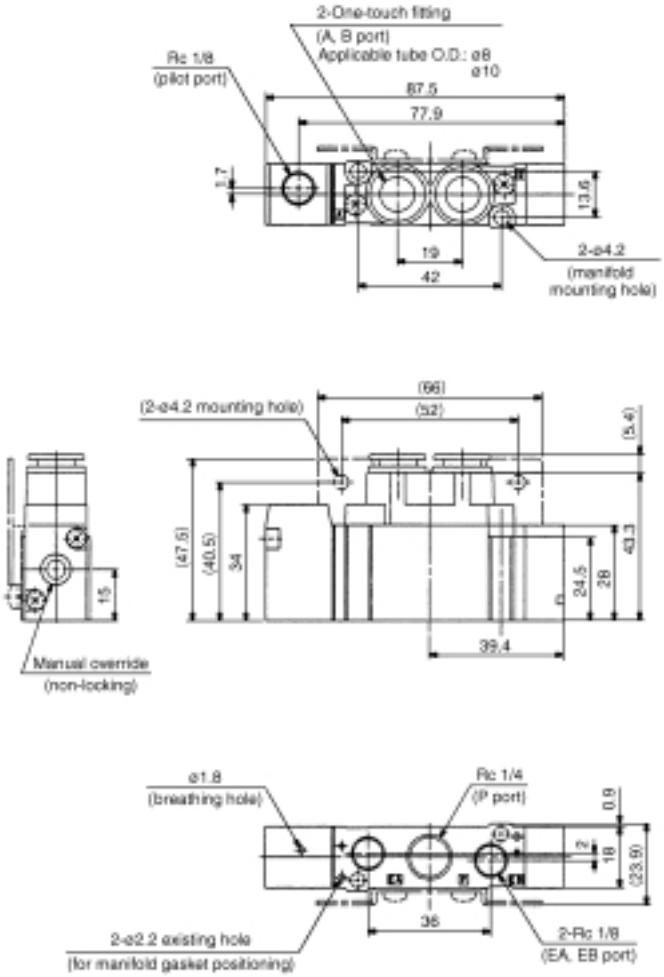

With foot bracket
SYA7120-$^{C8}_{C10}$-F1

Scale: 45%

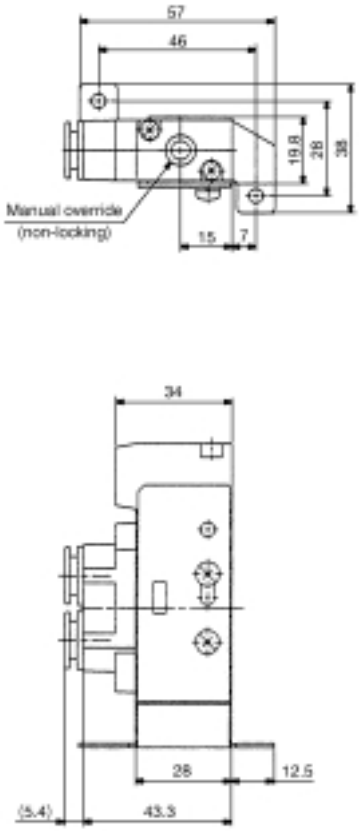

SYA7120-02

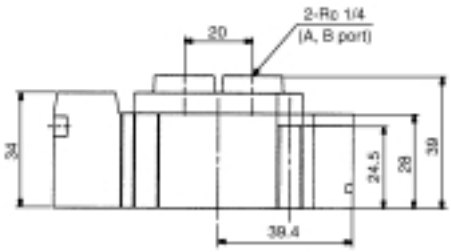

2 position double

SYA7220-$^{C8}_{C10}$

Scale: 45%

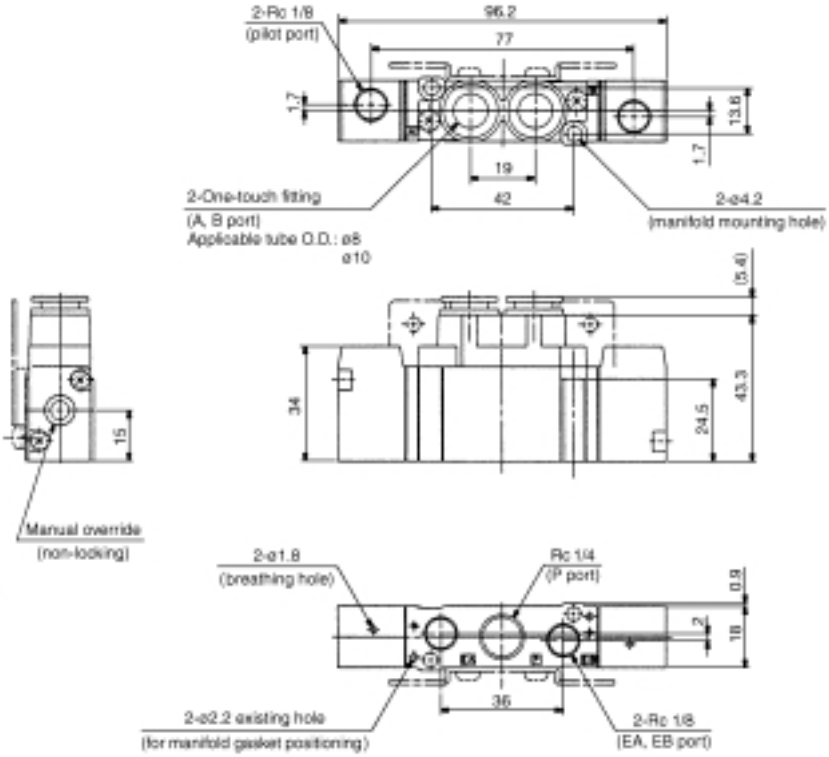

SYA7220-02

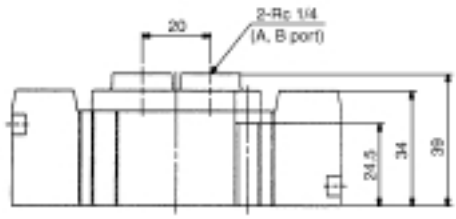

3 position closed center/exhaust center/pressure center

SYA7$^{3}_{4}_{5}$20-$^{C8}_{C10}$

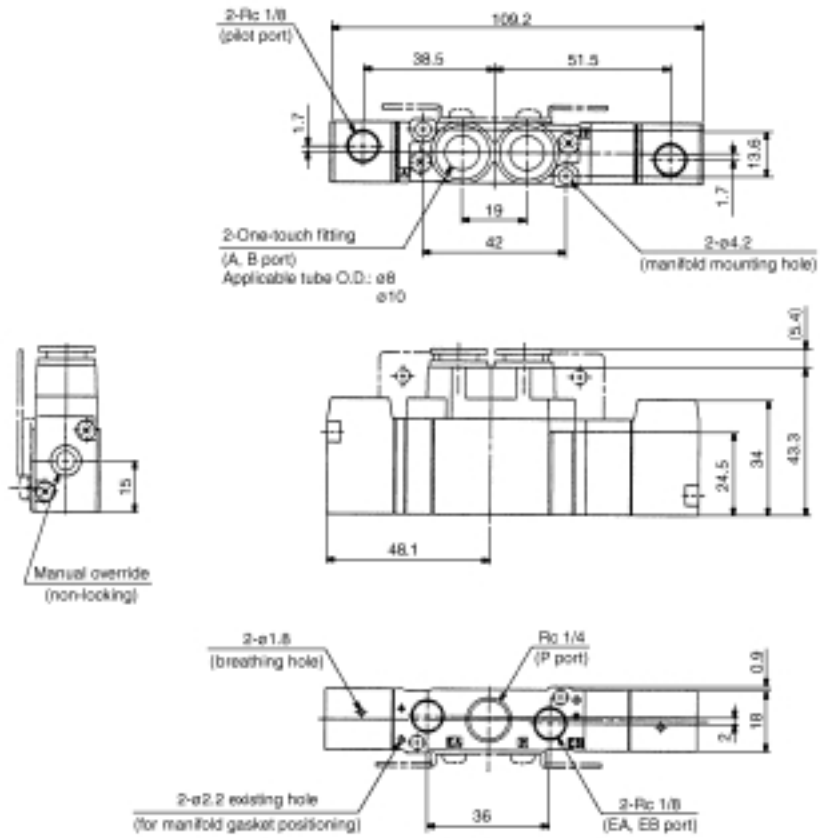

SYA7$^{3}_{4}_{5}$20-02

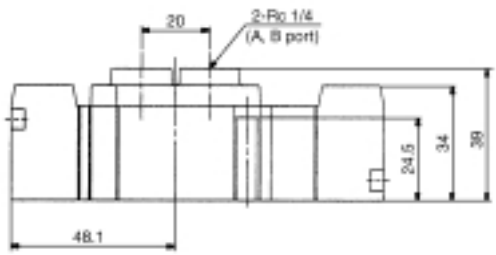

Series SYA7000 (Base Mounted) Dimensions

2 position single
SYA7140-$^{02}_{03}$

Scale: 45%

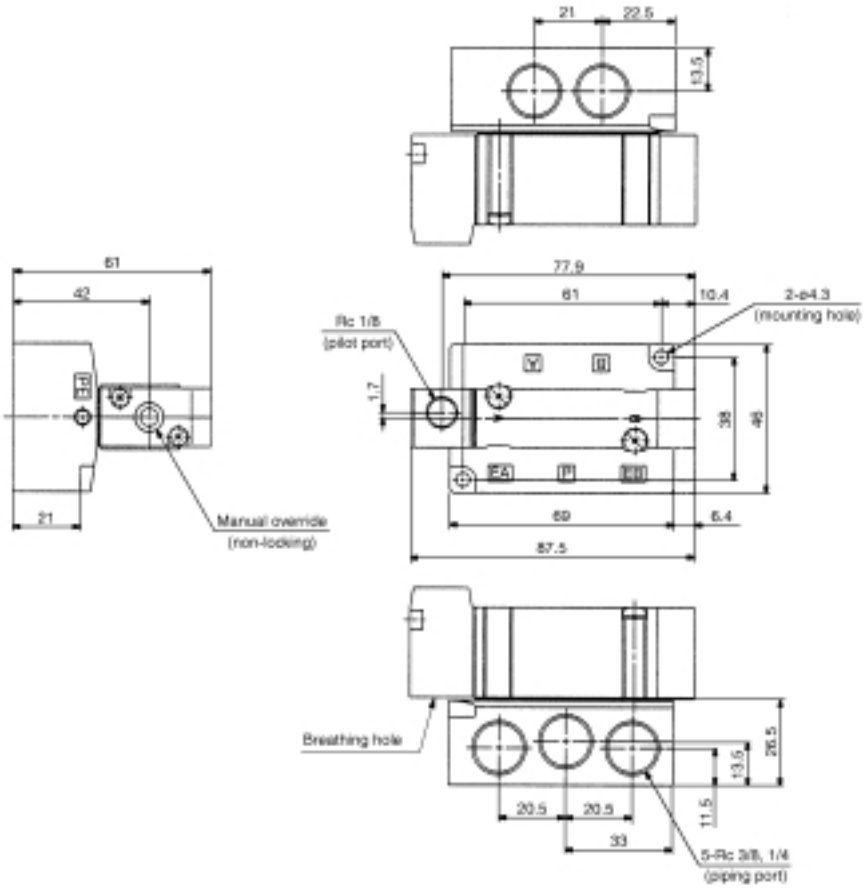

2 position double
SYA7240-$^{02}_{03}$

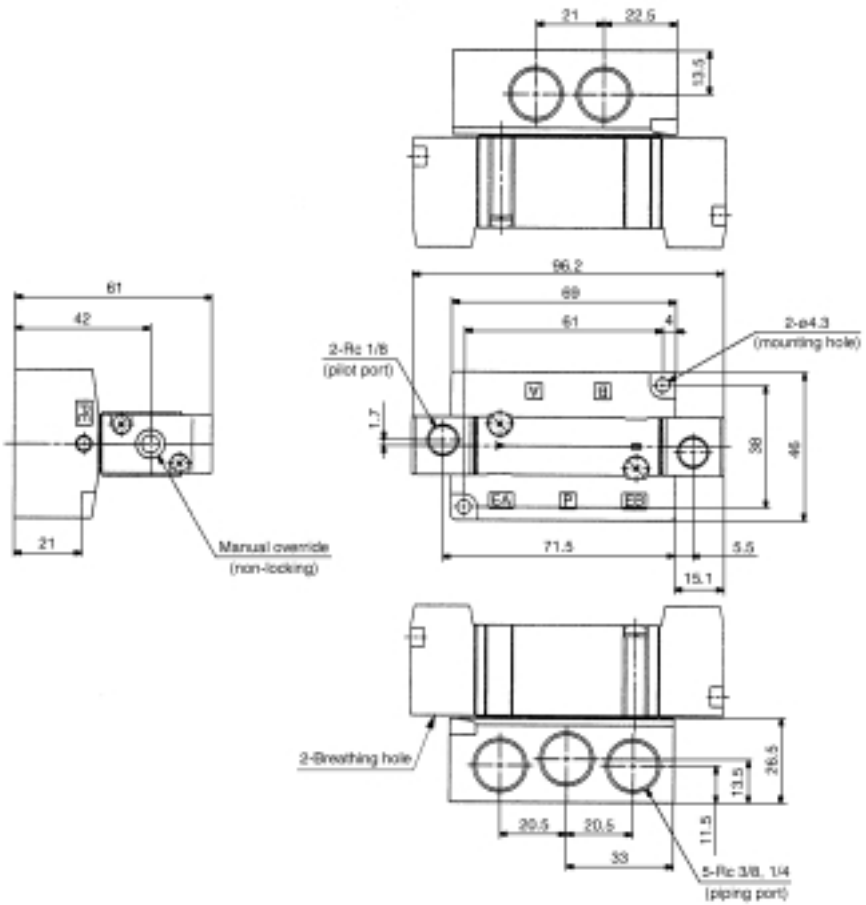

3 position closed center/exhaust center/pressure center
SYA7$^{3}_{4}_{5}$40-$^{02}_{03}$

Scale: 45%

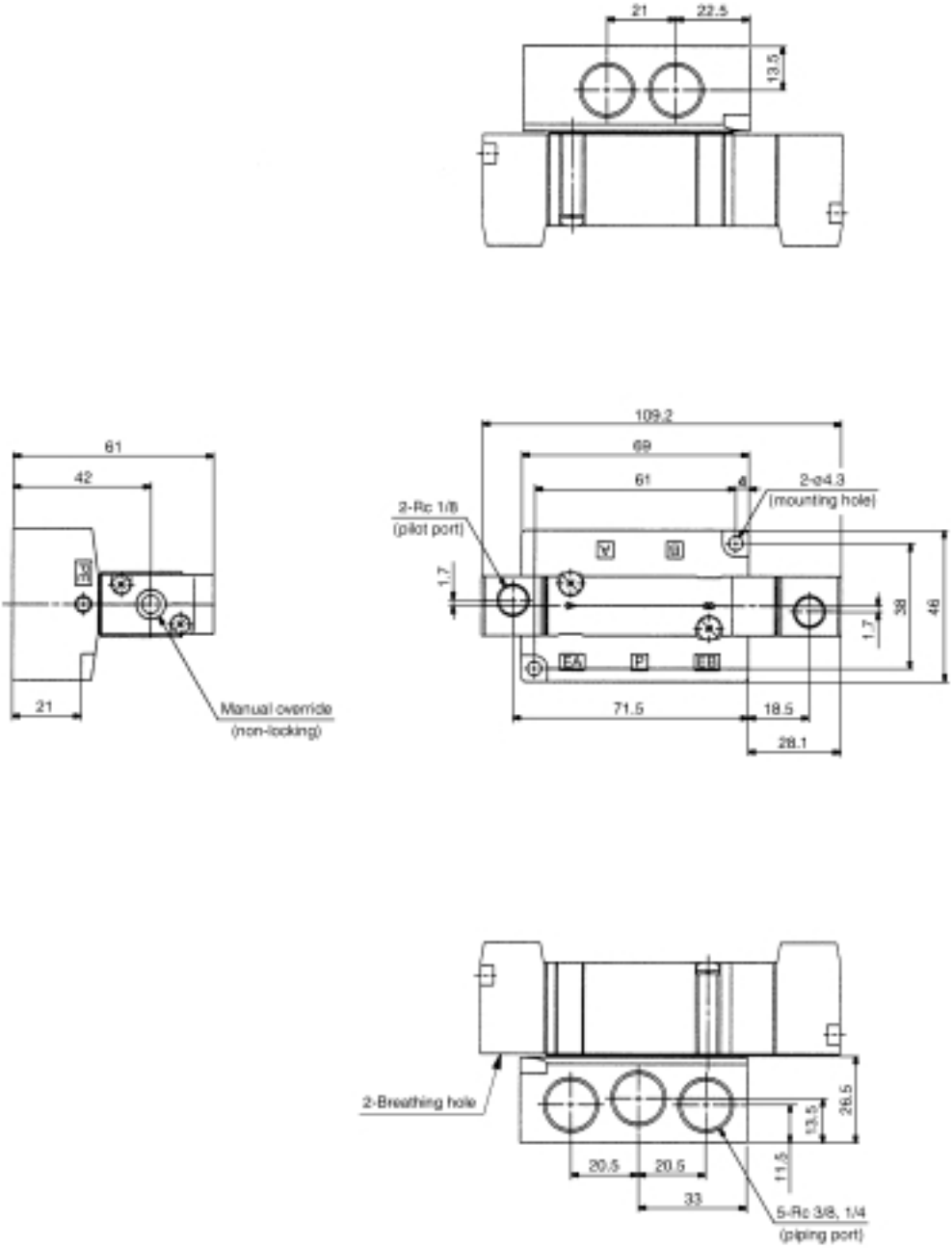

Type 45S2

Order Made Specifications
SY3000/5000
Serial Type with SMC IN313

Order Made

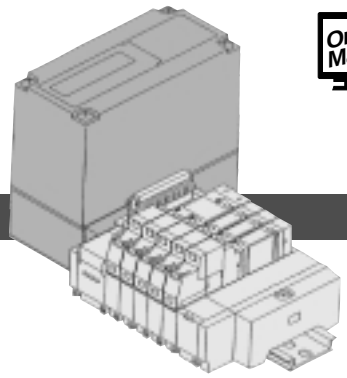

Serial transmission manifold equipped with SMC's IN313.

How to Order Manifolds

Type 45S2 (Serial type with IN313)

SS5Y 3 – 45S2 U – 06 D – C4 – ☐

Manifold series

3	SY3000
5	SY5000

SI unit mounting position

Symbol	Mounting position
U	U side
D	D side

Stations

Symbol	Stations	Note
02	2 stations	Single wiring specification (Up to 16 solenoids applicable)
⋮	⋮	
16	16 stations	

Note 1) Includes the number of blanking plate assemblies.
Note 2) Two manifold stations are required for double solenoid 3 position valves (dual body type).

SUP/EXH block assembly mounting position

Symbol	Mounting position	Applicable stations
U	U side	2 to 10 stations
D	D side	2 to 10 stations
B	Both sides	2 to 16 stations
M*	Special specifications	

* For special specifications, order separately on a manifold specification sheet.

A/B port size

SY3000

Symbol	Port size
C4	ø4 One-touch fitting
C6	ø6 One-touch fitting
M*	Mixed

SY5000

Symbol	Port size
C4	ø4 One-touch fitting
C6	ø6 One-touch fitting
C8	ø8 One-touch fitting
M*	Mixed

* For mixed specifications, order separately on a manifold specification sheet.

Option

When a DIN rail longer than the specified stations is necessary, indicate the number of required stations. (Max. 20 stations)

For the external pilot specification and built-in silencer type, refer to page 184.

How to Order Applicable SI Units

IN313 – MB1

Compatible manufacturers

MB1	Mitsubishi Electric Corporation
TA1	OMRON Corporation
FU1	Fuji Electric Co., Ltd.
SH1	SHARP Corporation
TY1	Toyoda Machinery
TY2	
PA1	Matsushita Electric Works
HT1	Hitachi, Ltd.
AB1	Rockwell Automation
TS1	Toshiba Corporation

How to Order Valves

2 position single **SY 3 1 4 0 – 5 FU ☐**

Double solenoid 3 position **SY 3 2 4 5 – 5 FU ☐**

Series

3	SY3000
5	SY5000

Type of actuation

2	2 position double
3	3 position closed center
4	3 position exhaust center
5	3 position pressure center

Dual body type (double solenoid 3 position)

Rated voltage

5	24VDC

Manual override

Nil	Non-locking push type
D	Push-turn locking slotted type
E	Push-turn locking lever type

Type 45S2 SY3000: Serial Transmission/Plug-in

Scale: 20%

SS5Y3-45S2D-Stations U-$^{C4}_{C6}$

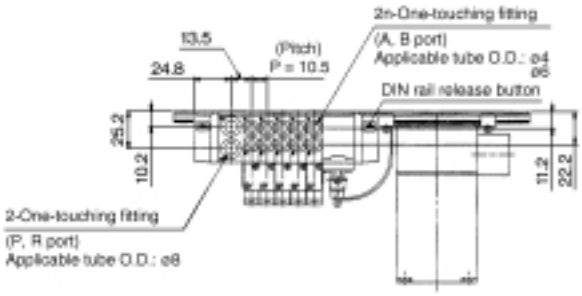

Note) Dimensions L1 to L4 of
SS5Y3-45S2D-Stations D-$^{C4}_{C6}$,
SS5Y3-45S2U-Stations D-$^{C4}_{C6}$, and
SS5Y3-45S2U-Stations U-$^{C4}_{C6}$ are the same as
SS5Y3-45S2D-Stations U-$^{C4}_{C6}$.

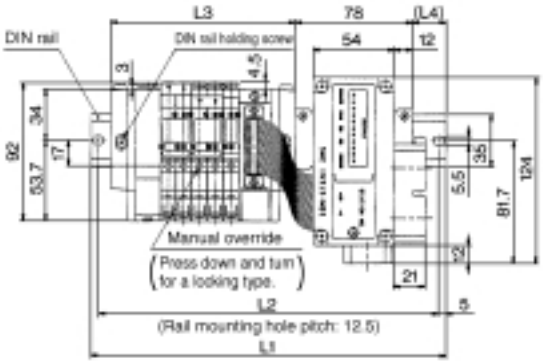

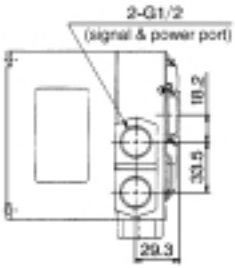

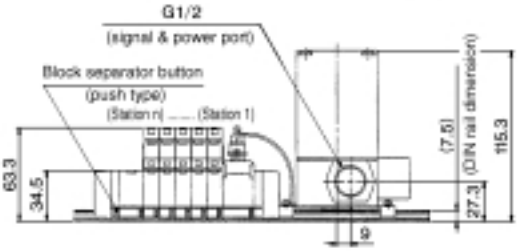

Stations n	2	3	4	5	6	7	8	9	10
L1	198	210.5	223	235.5	235.5	248	260.5	273	285.5
L2	187.5	200	212.5	225	225	237.5	250	262.5	275
L3	91.5	102	112.5	123	133.5	144	154.5	165	175.5
L4	14	15	16	17	12	13	14	15	16

SS5Y3-45S2U-Stations B-$^{C4}_{C6}$

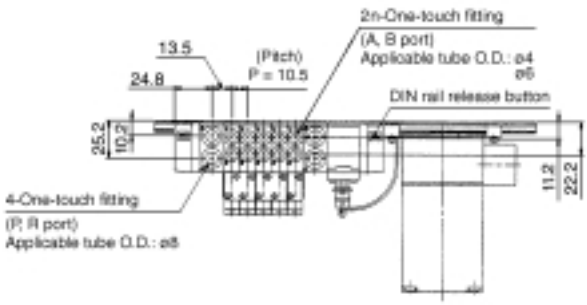

Note) Dimensions L1 to L4 of SS5Y3-45S2U-Stations B-$^{C4}_{C6}$ are the same as SS5Y3-45S2D-Stations B-$^{C4}_{C6}$.

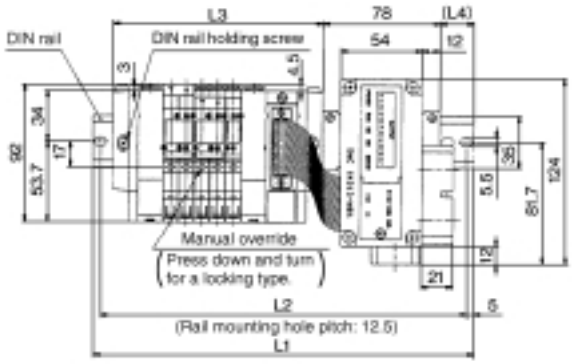

Stations n	2	3	4	5	6	7	8	9
L1	210.5	223	235.5	248	260.5	273	273	285.5
L2	200	212.5	225	237.5	250	262.5	262.5	275
L3	108	118.5	129	139.5	150	160.5	171	181.5
L4	12	13	14	15	16	17	12	13

Stations n	10	11	12	13	14	15	16
L1	298	310.5	323	335.5	335.5	348	360.5
L2	287.5	300	312.5	325	325	337.5	350
L3	192	202.5	213	223.5	234	244.5	255
L4	14	15	16	17	11.5	12.5	13.5

Type 45S2 SY5000: Serial Transmission/Plug-in

Scale: 20%

SS5Y5-45S2D-Stations U-C4/C6/C8

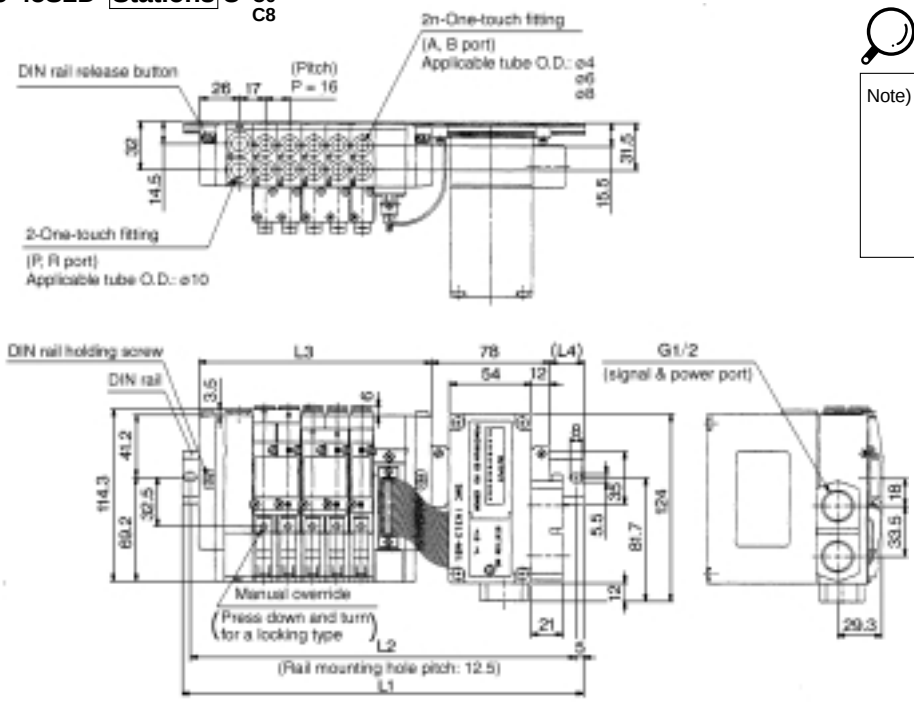

Note) Dimensions L1 to L4 of SS5Y5-45S2D-Stations D-C4/C6/C8, SS5Y5-45S2U-Stations D-C4/C6/C8, and SS5Y5-45S2U-Stations U-C4/C6/C8 are the same as SS5Y5-45S2D-Stations U-C4/C6/C8.

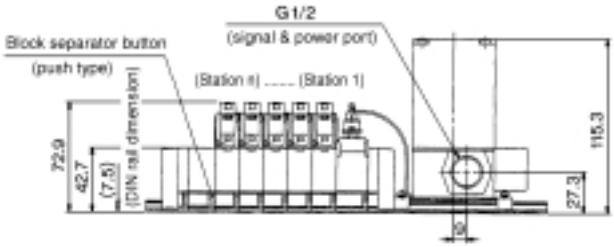

Stations n	2	3	4	5	6	7	8	9	10
L1	210.5	223	248	260.5	273	298	310.5	323	335.5
L2	200	212.5	237.5	250	262.5	287.5	300	312.5	325
L3	105	121	137	153	169	185	201	217	233
L4	13.5	12	16.5	14.5	13	17.5	15.5	14	12

SS5Y5-45S2U-Stations B-C4/C6/C8

Note) Dimensions L1 to L4 of SS5Y5-45S2U-Stations B-C4/C6/C8 are the same as SS5Y5-45S2D-Stations B-C4/C6/C8.

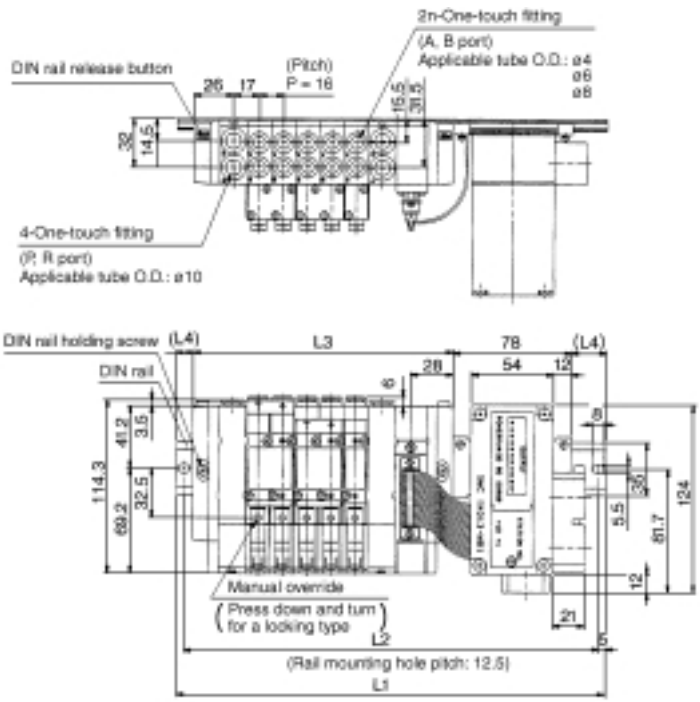

Stations n	2	3	4	5	6	7	8	9
L1	235.5	248	260.5	273	298	310.5	323	348
L2	225	237.5	250	262.5	287.5	300	312.5	337.5
L3	123	139	155	171	187	203	219	235
L4	17	15.5	13.5	12	16.5	14.5	13	17.5

Stations n	10	11	12	13	14	15	16
L1	360.5	373	385.5	410.5	423	435.5	460.5
L2	350	362.5	375	400	412.5	425	450
L3	251	267	283	299	315	331	347
L4	15.5	14	12	16.5	15	13	17.5

Type 45S3

Order Made Specifications *SY3000/5000* Serial Type with OMRON G71-OD16

Order Made

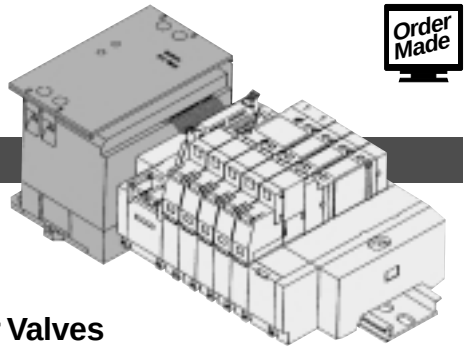

Serial transmission manifold equipped with OMRON'S G71-OD16.

How to Order Manifolds

Type 45S3 (Serial type with transmission unit)

SS5Y 3 – 45S3 ☐ U – 06 D – C4 – ☐

Manifold series

3	SY3000
5	SY5000

Specification

Symbol	Specification
Nil	With transmission unit
O Note)	Without transmission unit

Note) Even without a transmission unit, the length of the DIN rail can accommodate a transmission unit. If a shorter length for the DIN rail is desired (same as type 45☐), add "0" for option at the end of the part number.

Transmission unit mounting position

Symbol	Mounting position
U	U side
D	D side

Stations

Symbol	Stations	Note
02	2	Single wiring specification (Up to 16 solenoids applicable)
⋮	⋮	
16	16	

Note 1) Includes the number of blanking plate assemblies.
Note 2) Two manifold stations are required for double solenoid 3 position valves (dual body type).

SUP/EXH block assembly mounting position

Symbol	Mounting position	Applicable stations
U	U side	2 to 10 stations
D	D side	2 to 10 stations
B	Both sides	2 to 16 stations
M*	Special specifications	

* For special specifications, order separately on a manifold specification sheet.

A/B port size

SY3000

Symbol	Port size
C4	ø4 One-touch fitting
C6	ø6 One-touch fitting
M*	Mixed

SY5000

Symbol	Port size
C4	ø4 One-touch fitting
C6	ø6 One-touch fitting
C8	ø8 One-touch fitting
M*	Mixed

* For mixed specifications, order separately on a manifold specification sheet.

Option

When a DIN rail longer than the specified stations is necessary, indicate the number of required stations. (Max. 20 stations)

For the external pilot specification and built-in silencer type, refer to page 184.

How to Order Valves

2 position single **SY 3 1 4 0 – 5 FU ☐**

Double solenoid 3 position **SY 3 2 4 5 – 5 FU ☐**

Series

3	SY3000
5	SY5000

Type of actuation

2	2 position double
3	3 position closed center
4	3 position exhaust center
5	3 position pressure center

Dual body type (double solenoid 3 position)

Rated voltage

5	24VDC

Manual override

Nil	Non-locking push type
D	Push-turn locking slotted type
E	Push-turn locking lever type

Manifold internal wiring

Type 45S3/Serial type
(Layout example)

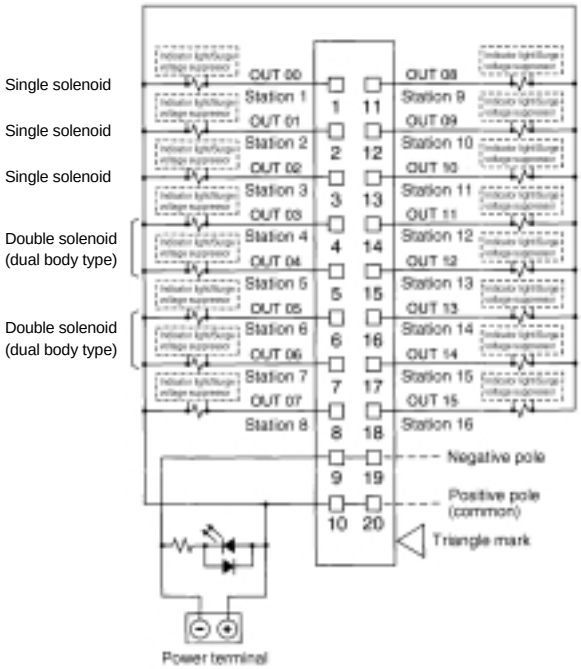

Note 1) For OMRON transmission terminal specifications, refer to the instruction manual or catalog of the transmission terminal.
Note 2) A maximum of 16 solenoids can be used. Contact SMC if more than 16 solenoids are required.

⚠ Caution

Wiring specifications of SS5Y$\frac{3}{5}$-45S30 differ from SS5Y$\frac{3}{5}$-45PG.

Type 45S3 SY3000: Serial Transmission/Plug-in

SS5Y3-45S3D-Stations U-$^{C4}_{C6}$

Scale: 25%

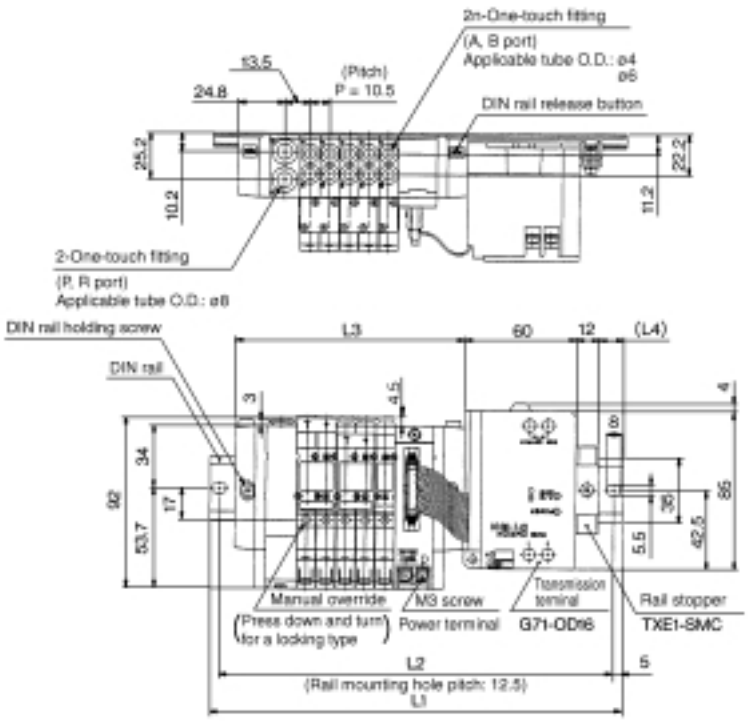

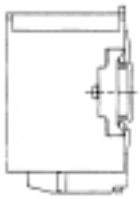

Note) Dimensions L1 to L4 of
SS5Y3-45S3D-Stations D-$^{C4}_{C6}$,
SS5Y3-45S3U-Stations D-$^{C4}_{C6}$, and
SS5Y3-45S3U-Stations U-$^{C4}_{C6}$ are the same as
SS5Y3-45S3D-Stations U-$^{C4}_{C6}$.

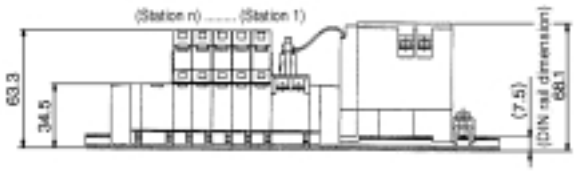

Stations n	2	3	4	5	6	7	8	9	10
L1	198	198	210.5	223	235.5	248	260.5	260.5	273
L2	187.5	187.5	200	212.5	225	237.5	250	250	262.5
L3	91.5	102	112.5	123	133.5	144	154.5	165	175.5
L4	17	12	13	14	15	16	17	11.5	12.5

SS5Y3-45S3D-Stations B-$^{C4}_{C6}$

Note) Dimensions L1 to L4 of SS5Y3-45S3U-Stations B-$^{C4}_{C6}$ are the same as SS5Y3-45S3D-Stations B-$^{C4}_{C6}$.

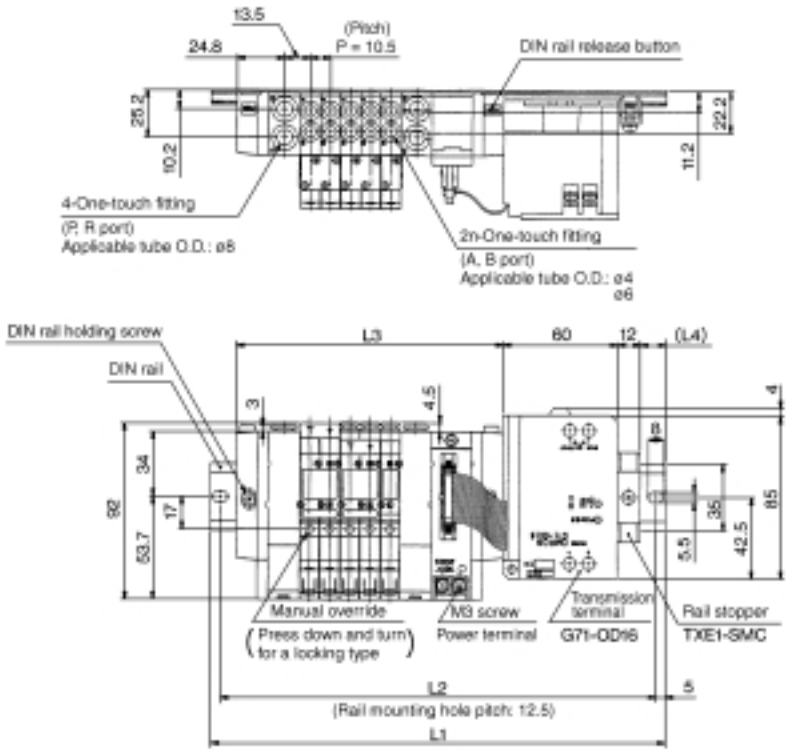

Stations n	2	3	4	5	6	7	8	9
L1	210.5	223	235.5	235.5	248	260.5	273	285.5
L2	200	212.5	225	225	237.5	250	262.5	275
L3	108	118.5	129	139.5	150	160.5	171	181.5
L4	15	16	17	12	13	14	15	16

Stations n	10	11	12	13	14	15	16
L1	298	298	310.5	323	335.5	348	360.5
L2	287.5	287.5	300	312.5	325	337.5	350
L3	192	202.5	213	223.5	234	244.5	255
L4	17	11.5	12.5	13.5	14.5	15.5	16.5

SY5000: Serial Transmission/Plug-in

SS5Y5-45S3D-Stations U-C4/C6/C8

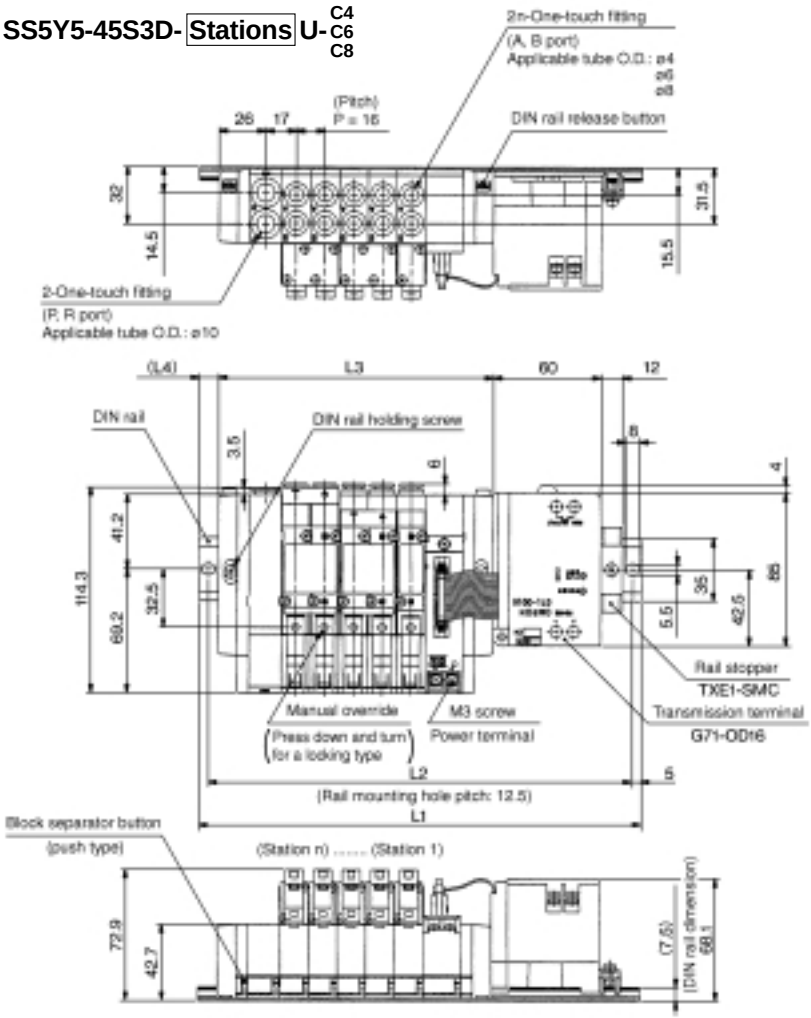

Scale: 25%

Note) Dimensions L1 to L4 of
SS5Y5-45S3D-Stations D-C4/C6/C8,
SS5Y5-45S3U-Stations D-C4/C6/C8, and
SS5Y5-45S3U-Stations U-C4/C6/C8 are the same as
SS5Y5-45S3D-Stations U-C4/C6/C8.

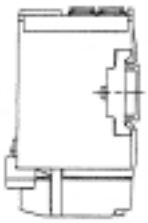

Stations n	2	3	4	5	6	7	8	9	10
L1	210.5	223	235.5	260.5	273	285.5	298	323	335.5
L2	200	212.5	225	250	262.5	275	287.5	312.5	325
L3	105	121	137	153	169	185	201	217	233
L4	16.5	15	13	17.5	16	14	12.5	17	15

SS5Y5-45S3D-Stations B-C4/C6/C8

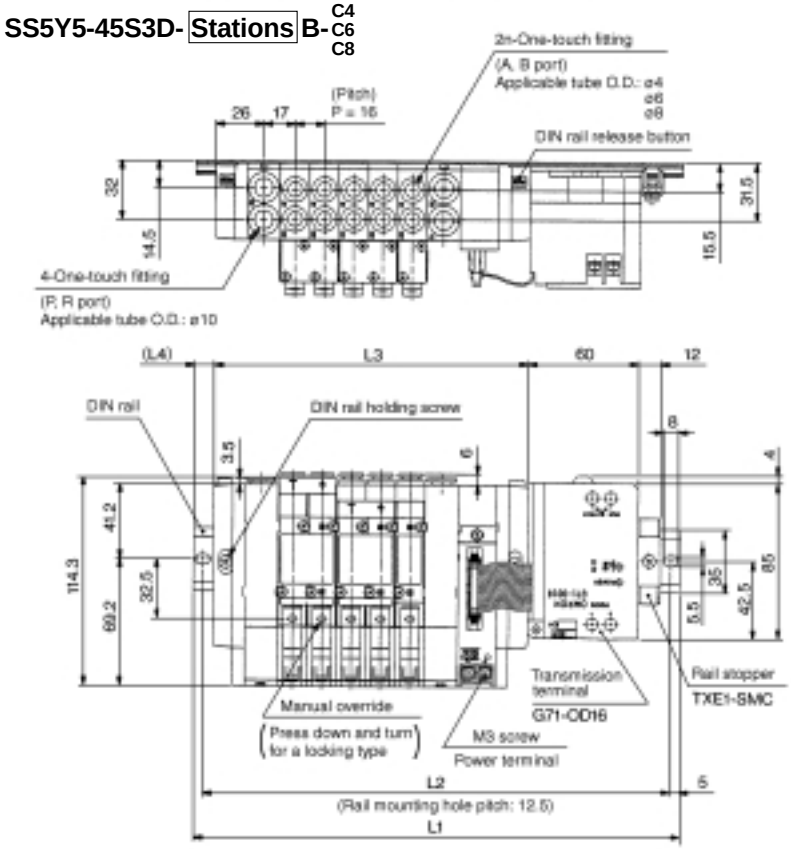

Note) Dimensions L1 to L4 of SS5Y5-45S3U-Stations B-C4/C6/C8 are the same as SS5Y5-45S3D-Stations B-C4/C6/C8.

Stations n	2	3	4	5	6	7	8	9
L1	223	235.5	260.5	273	285.5	310.5	323	335.5
L2	212.5	225	250	262.5	275	300	312.5	325
L3	123	139	155	171	187	203	219	235
L4	14	12	16.5	15	13	17.5	16	14

Stations n	10	11	12	13	14	15	16
L1	348	373	385.5	398	410.5	435.5	448
L2	337.5	362.5	375	387.5	400	425	437.5
L3	251	267	283	299	315	331	347
L4	12.5	17	15	13.5	11.5	16	14.5

Order Made Specifications *SY3000/5000*
External pilot and Built-in Silencer

Order Made

Manifolds with external pilot specification for use with low pressure and vacuum are added to the stacking and DIN rail mount types. Also, a clean appearance is achieved with the built-in silencer.

Type 45 Individual wiring/Connector box

How to Order Manifolds

Type 45

SS5Y3/5-45(-A)-05 U R -C6-

Manifold series

3	SY3000
5	SY5000

Stations

Symbol	Stations
02	2 stations
⋮	⋮
20	20 stations

∗ Includes the number of blanking plate assemblies.

SUP/EXH block assembly mounting position

Symbol	Mounting position	Applicable stations
U	U side	2 to 10 stations
D	D side	
B	Both sides	2 to 20 stations
M∗	Special specifications	

∗ For special specifications, order separately on a manifold specification sheet.

SUP/EXH block assembly specification

Symbol	Specification
R	External pilot
S	Internal pilot/Built-in silencer
RS	External pilot/Built-in silencer

Option

When a DIN rail longer than the specified stations is necessary, indicate the number of required stations. (Max. 20 stations)

A/B port size

SY3000

Symbol	Port size
C4	ø4 One-touch fitting
C6	ø6 One-touch fitting
M∗	Mixed

SY5000

Symbol	Port size
C4	ø4 One-touch fitting
C6	ø6 One-touch fitting
C8	ø8 One-touch fitting
M∗	Mixed

∗ For mixed specifications, order separately on a manifold specification sheet.

How to Order Manifold Assemblies (Example)

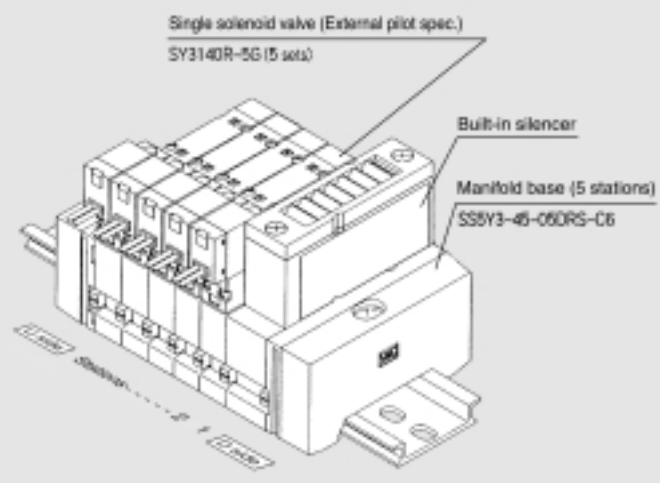

SS5Y3-45-05DRS-C6 .... 1 set (External pilot/Built-in silencer part no.)
∗ SY3140R-5G ..... 5 sets (Single solenoid part no.)
To order valves and options mounted onto the manifold at the factory, list the valve/option with an asterisk (∗) in front of each part number.

Valves are assembled from the D side regardless of the location of the SUP/EXH block assembly. Make entries in order from station 1 on the D side.

When entry of part numbers becomes complicated, indicate on a manifold specification sheet.

When SUP/EXH block assemblies are mounted on both sides, two pieces of the external pilot and silencer will be mounted on each side.

For special applications of the SUP/EXH block, the SUP/EXH block assembly shown on page 105 (SX3/5000-51-1A) is also available. Indicate the part number and mounting positions on a manifold specification sheet in section (b). (Manifold Specification Sheet on pages 201 through 204)

How to Order Valves

SY 5 2 40 - 5 L

Series

3	SY3000
5	SY5000

Type of actuation

1	2 position single
2	2 position double
3	3 position closed center
4	3 position exhaust center
5	3 position pressure center

Pilot type

Nil	Internal pilot
R	External pilot

Rated voltage

DC specifications

5	24VDC
6	12VDC
V	6VDC
S	5VDC
R	3VDC

AC specifications (50/60Hz)

1	100VAC
2	200VAC
3	110VAC [115VAC]
4	220VAC [230VAC]

Note 1) DC specifications for "D" and "DO" are only available in 24VDC and 12VDC.
Note 2) "D" and "DO" are available for SY5000 only.

Manual override

Nil	Non-locking push type
D	Push-turn locking slotted type
E	Push-turn locking lever type

Indicator light/Surge voltage suppressor

Electrical entry G, H, L, M

Nil	Without indicator light/surge voltage suppressor
S	With surge voltage suppressor
Z	With indicator light/surge voltage suppressor
R	With surge voltage suppressor (non-polar type)
U	With indicator light/surge voltage suppressor (non-polar type)

Note 1) For AC, there is no "S" specification, since it is integrated with the rectifier.
Note 2) "R" and "U" are available for DC only.

Electrical entry D (SY5000 only)

Nil	Without indicator light/surge voltage suppressor
S	With surge voltage suppressor (non-polar type)
Z	With indicator light/surge voltage suppressor (non-polar type)

Note 1) "DOZ" is not available.
Note 2) For AC, there is no "S" specification, since it is integrated with the rectifier.

Electrical entry

24V, 12V, 6V, 5V, 3VDC/100V, 110V, 200V, 220VAC			24V, 12VDC 100V, 110V, 200V, 220VAC
Grommet	**L type plug connector**	**M type plug connector**	**DIN terminal**
G: Lead wire length 300mm **H:** Lead wire length 600mm	**L:** With lead wire (length 300mm) **LN:** Without lead wire **LO:** Without connector	**M:** With lead wire (length 300mm) **MN:** Without lead wire **MO:** Without connector	**(SY5000 only)** **D:** With connector **DO:** Without connector

Note 1) "LN" and "MN" include 2 sockets.
Note 2) "D" and "DO" are available for SY5000 only.
Note 3) DIN43650C standard DIN terminal "Y" is also available. Refer to page 189 for details.
Note 4) The connector box type is only available with "-5LOU" setting.

Type 45□ Plug-in

How to Order Manifolds

Type 45□

SS5Y3/5 – 45 □ F U – 05 U R – □ – □ – □

Manifold series

3	SY3000
5	SY5000

Common specification

Nil	Positive COM
N	Negative COM

Note) Indicate "Nil" for types T, T1, and S□.

Connector type

Symbol	Mounting position
F	D-sub connector
P	Flat ribbon cable 26 pins
PG	Flat ribbon cable 20 pins
PH	Flat ribbon cable 10 pins
T	Terminal block 9 pins
T1	Terminal block 18 pins
S□	Serial transmission

Refer to pages starting with 115 for details.

Connector mounting position

Symbol	Mounting position
U	U side
D	D side

Stations

Symbol	Stations	Note
02	2 stations	Single wiring specification
⋮	⋮	
20	20 stations	

Note 1) Includes the number of blanking plate assemblies.
Note 2) Since the number of stations is limited depending on the connector type, refer to page 118.
Note 3) Two manifold stations are required for double solenoid 3 position valves (dual body type).

SUP/EXH block assembly mounting position

Symbol	Mounting position	Applicable stations
U	U side	2 to 10 stations
D	D side	
B	Both sides	2 to 20 stations
M*	Special specifications	

* For special specifications, order separately on a manifold specification sheet.

SUP/EXH block assembly specification

Symbol	Specification
R	External pilot
S	Internal pilot/Built-in silencer
RS	External pilot/Built-in silencer

A/B port size

SY3000

Symbol	Port size
C4	ø4 One-touch fitting
C6	ø6 One-touch fitting
M*	Mixed

SY5000

Symbol	Port size
C4	ø4 One-touch fitting
C6	ø6 One-touch fitting
C8	ø8 One-touch fitting
M*	Mixed

* For mixed specifications, order separately on a manifold specification sheet.

Voltage specification

Nil	24VDC
12V	12VDC

Note) Indicate "Nil" for types T, T1, and S□.

Option

When a DIN rail longer than the specified stations is necessary, indicate the number of required stations. (Max. 20 stations)

How to Order Manifold Assemblies (Example)

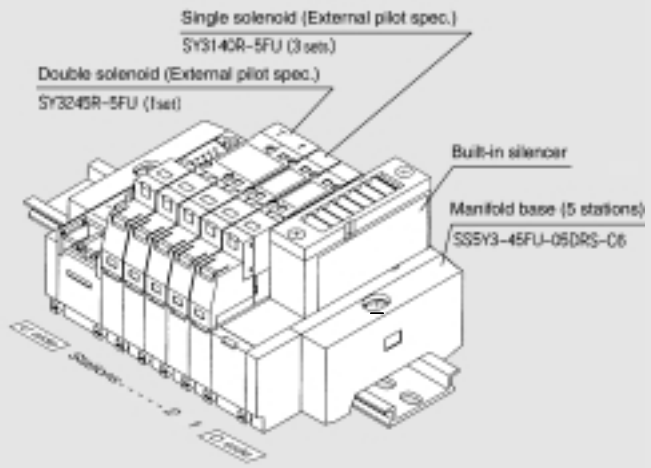

SS5Y3-45FU-05DRS-C6 ..... 1 set (External pilot/Built-in silencer part no.)
* SY3140R-5FU ..... 3 sets (Single solenoid part no.)
* SY3245R-5FU ..... 1 set (Double solenoid part no.)

To order valves and options mounted onto the manifold at the factory, list the valve/option with an asterisk (*) in front of each part number.

Valves are assembled from the D side regardless of the location of the SUP/EXH block assembly. Make entries in order from station 1 on the D side.

When entry of part numbers becomes complicated, indicate on a manifold specification sheet.

When SUP/EXH block assemblies are mounted on both sides, two pieces of the external pilot and silencer will be mounted on each side.

For special applications of the SUP/EXH block, the SUP/EXH block assembly shown on page 143 (SX3/5000-51-2A) is also available. Indicate the part number and mounting positions on a manifold specification sheet in section (b).

Since double solenoid 3 position valves (dual body type) require 2 manifold stations, be sure to specify the appropriate number of stations with the manifold part number. (Manifold Specification Sheet on pages 205 through 222)

How to Order Valves

SY 3 1 4 □ □ – 5 FU □

Series

3	SY3000
5	SY5000

Type of actuation

1	2 position single
2	2 position double
3	3 position closed center
4	3 position exhaust center
5	3 position pressure center

Body option

0	Standard (single only)
5	Dual body type (double solenoid 3 position)

Pilot type

Nil	Internal pilot
R	External pilot

Rated voltage

5	24VDC
6	12VDC
V*	6VDC
S*	5VDC
R*	3VDC

* Applies to 45T/T1 only. 24VDC only for type S□.

Manual override

Nil	Non-locking push type
D	Push-turn locking slotted type
E	Push-turn locking lever type

Type 45 External Pilot and Built-in Silencer

Note) [ ]: Values for AC
< >: Values with surge voltage suppressor

Scale: 30%

SY3000: SS5Y3-45-Stations DRS-C4/C6

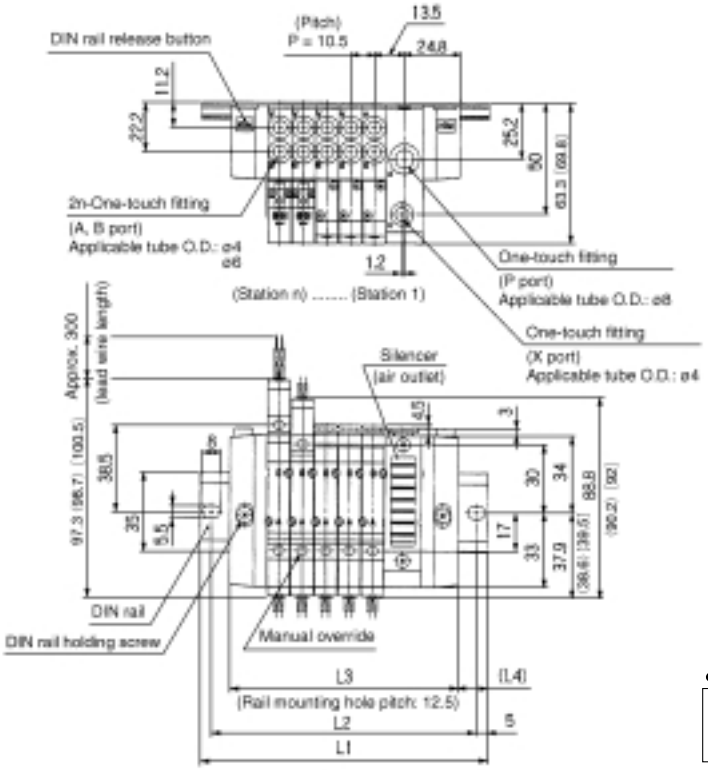

SS5Y3-45-Stations DR-C4/C6

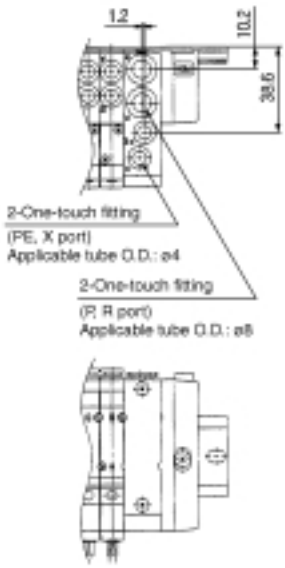

Note) Dimensions L1 to L4 are the same as SS5Y3-45-Stations-U/D/B-C4/C6 (pages starting with 101).

SY5000: SS5Y5-45-Stations DRS-C4/C6/C8

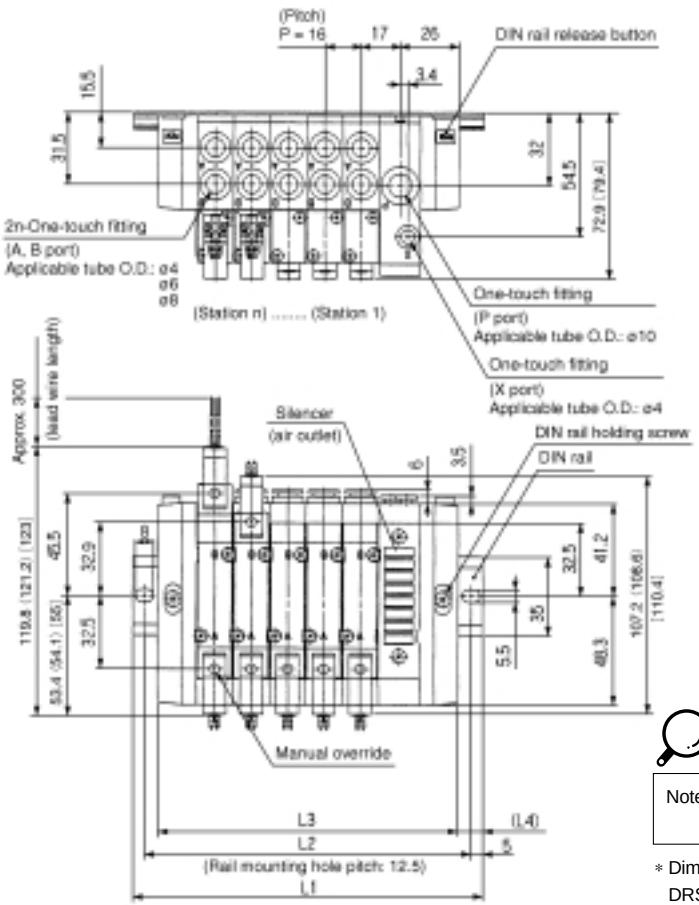

SS5Y5-45-Stations DR-C4/C6/C8

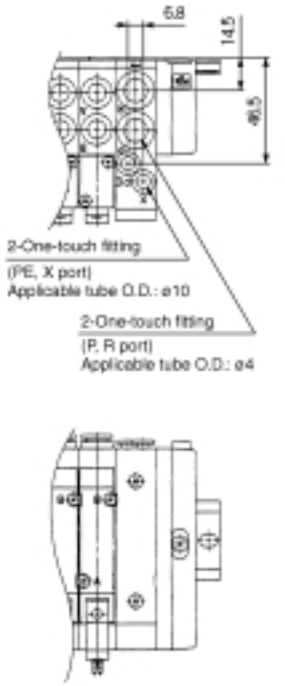

Note) Dimensions L1 to L4 are the same as SS5Y5-45-Stations-U/D/B-C4/C6/C8 (pages starting with 103).

∗ Dimensions of SS5Y$^{3}_{5}$-45-Stations URS are the same as SS5Y$^{3}_{5}$-45-Stations DRS.

Type 45□ External Pilot and Built-in Silencer

Scale: 30%

SY3000: SS5Y3-45FU-Stations DRS-C4/C6

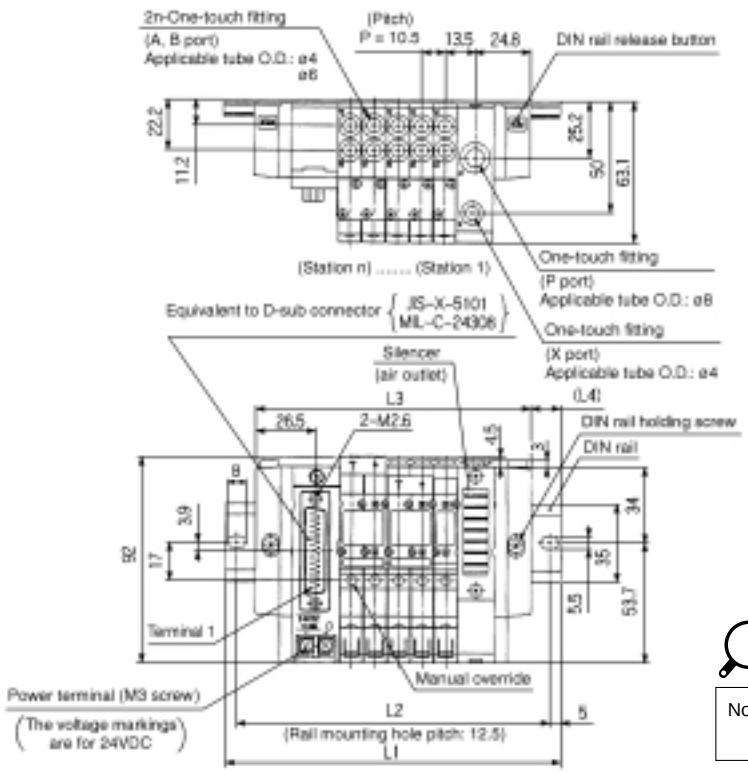

SS5Y3-45FU-Stations DR-C4/C6

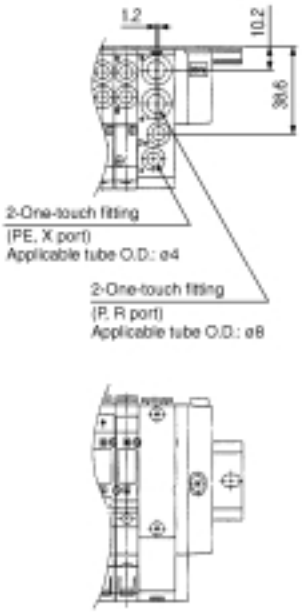

Note) Dimensions L1 to L4 are the same as SS5Y3-45F$^{U}_{D}$-Stations-$^{U}_{D}$-$^{C4}_{C6}$ (pages starting with 125).

SY5000: SS5Y5-45FU-Stations DRS-C4/C6/C8

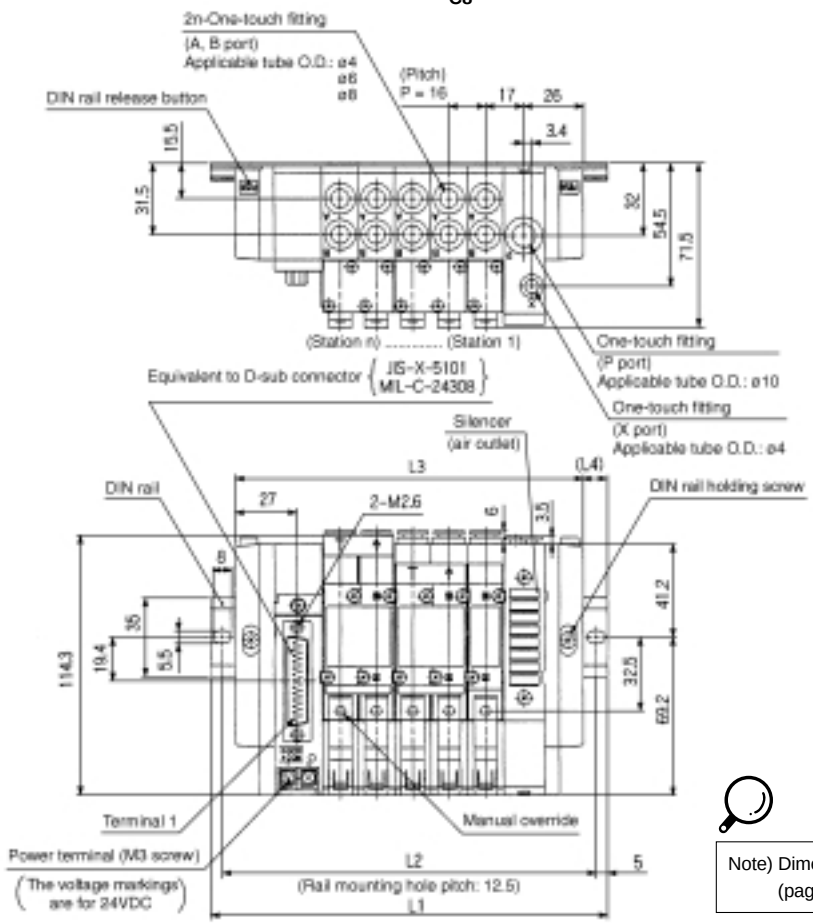

SS5Y5-45FU-Stations DR-C4/C6/C8

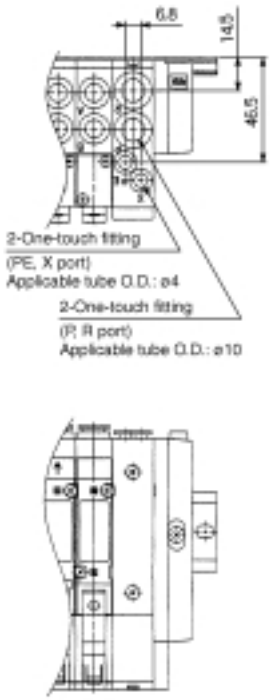

Note) Dimensions L1 to L4 are the same as SS5Y5-45F$^{U}_{D}$-Stations-$^{U}_{D}$-$^{C4}_{C6}$ ^{C8} (pages starting with 127).

∗ Dimensions of SS5Y$^{3}_{5}$-45-Stations URS are the same as SS5Y$^{3}_{5}$-45-Stations DRS.

Order Made Specifications *SY3000/5000*
Mixed Mounting Type

Type M45 Non-plug-in

SY5000 manifold base allows mounting of SY3000.

How to Order Manifolds

Type M45 (Mixed mounting)

SS5Y5 − M45 − 05 U [ ] − C86 [ ]

Mixed mounting type

Stations

Symbol	Stations
02	2 stations
⋮	⋮
20	20 stations

∗ Includes the number of blanking plate assemblies.

SUP/EXH block assembly mounting position

Symbol	Mounting position	Applicable stations
U	U side	2 to 10 stations
D	D side	
B	Both sides	2 to 20 stations
M∗	Special specifications	

∗ For special specifications, order separately on a manifold specification sheet.

Option

When a DIN rail longer than the specified stations is necessary, indicate the number of required stations. (Max. 20 stations)

SUP/EXH block assembly specification

Symbol	Specification
Nil	Standard/Internal pilot
S	Built-in silencer

Note) External pilot specification is not available for the mixed mounting type.

A/B port size

Symbol	Port size
C44	SY5000: ø4 One-touch fitting SY3000: ø4 One-touch fitting
C46	SY5000: ø4 One-touch fitting SY3000: ø6 One-touch fitting
C64	SY5000: ø6 One-touch fitting SY3000: ø4 One-touch fitting

Symbol	Port size
C66	SY5000: ø6 One-touch fitting SY3000: ø6 One-touch fitting
C84	SY5000: ø8 One-touch fitting SY3000: ø4 One-touch fitting
C86	SY5000: ø8 One-touch fitting SY3000: ø6 One-touch fitting
M∗	Mixed

∗ For mixed specifications, order separately on a manifold specification sheet.

How to Order Manifold Assemblies (Example)

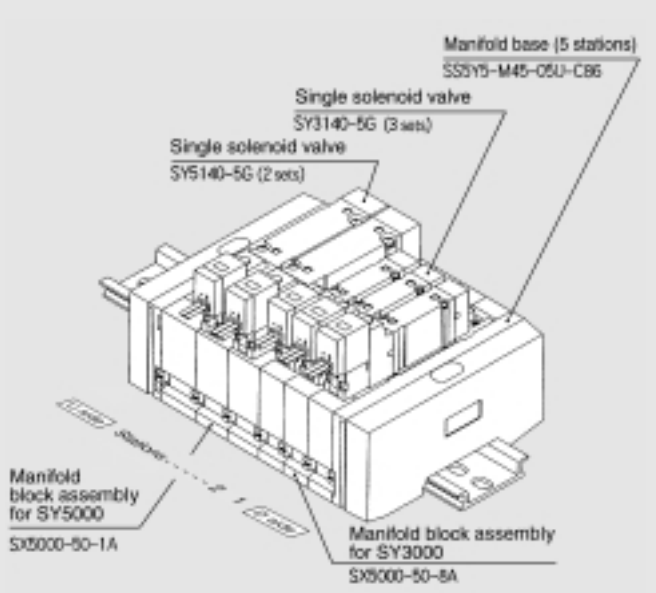

SS5Y5-M45-05U-C86 ..... 1 set (Type M45 manifold base part no.)
∗ SY3140-5G ..... 3 sets (Single solenoid part no.)
∗ SY5140-5G∗ ..... 2 sets (Single solenoid part no.)
→ To order valves and options mounted onto the manifold at the factory, list the valve/option with an asterisk (∗) in front of each part number.

Valves are assembled from the D side regardless of the location of the SUP/EXH block assembly. Add the valve and option part numbers in order starting from the first station on the D side. When entry of part numbers becomes complicated, indicate on a manifold specification sheet. (Manifold Specification Sheet on pages 227 and 228)

How to Order Valves

SY 5 2 40 − 5 L [ ] [ ]

Series

3	SY3000
5	SY5000

Type of actuation

1	2 position single
2	2 position double
3	3 position closed center
4	3 position exhaust center
5	3 position pressure center

Rated voltage

DC specifications

5	24VDC
6	12VDC
V	6VDC
S	5VDC
R	3VDC

AC specifications (50/60Hz)

1	100VAC
2	200VAC
3	110VAC [115VAC]
4	220VAC [230VAC]

Manual override

Nil	Non-locking push type
D	Push-turn locking slotted type
E	Push-turn locking lever type

Indicator light/Surge voltage suppressor
Electrical entry G, H, L, M

Nil	Without indicator light/surge voltage suppressor
S	With surge voltage suppressor
Z	With indicator light/surge voltage suppressor
R	With surge voltage suppressor (non-polar type)
U	With indicator light/surge voltage suppressor (non-polar type)

Note 1) For AC, there is no "S" specification, since it is integrated with the rectifier.
Note 2) "R" and "U" are available for DC only.

Electrical entry

24V, 12V, 6V, 5V, 3VDC/100V, 110V, 200V, 220VAC

Grommet	L type plug connector	M type plug connector
G: Lead wire length 300mm **H:** Lead wire length 600mm	**L:** With lead wire (length 300mm) **LN:** Without lead wire **LO:** Without connector	**M:** With lead wire (length 300mm) **MN:** Without lead wire **MO:** Without connector

Note) "LN" and "MN" include 2 sockets.

Type M45 Mixed Mounting Type Dimensions

Note) [ ]: Values for AC
< >: Values with surge voltage suppressor

Scale: 30%

SS5Y5-M45-Stations U

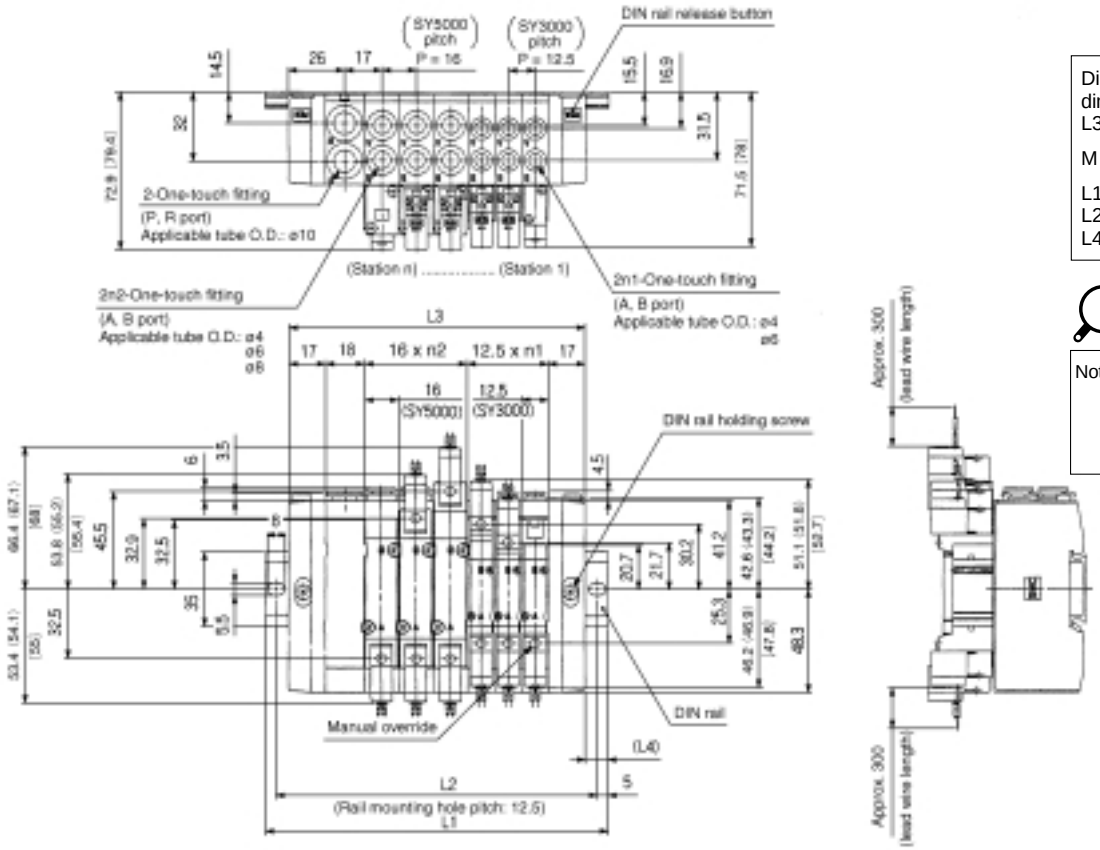

Dimension L: Formulas for dimensions L1 to L4
L3 = 12.5 x n1 + 16 x n2 + 52
$M = (\frac{L3}{12.5} + 1)$ omit decimals
L1 = 12.5 x M + 23
L2 = L1 – 10.5
L4 = (L1 – L3)/2

n1: Number of SY3000 stations
n2: Number of SY5000 stations

Note) Dimensions L1 to L4 of SS5Y5-M45-Stations D are the same as SS5Y5-M45-Stations U.

SS5Y5-M45-Stations B

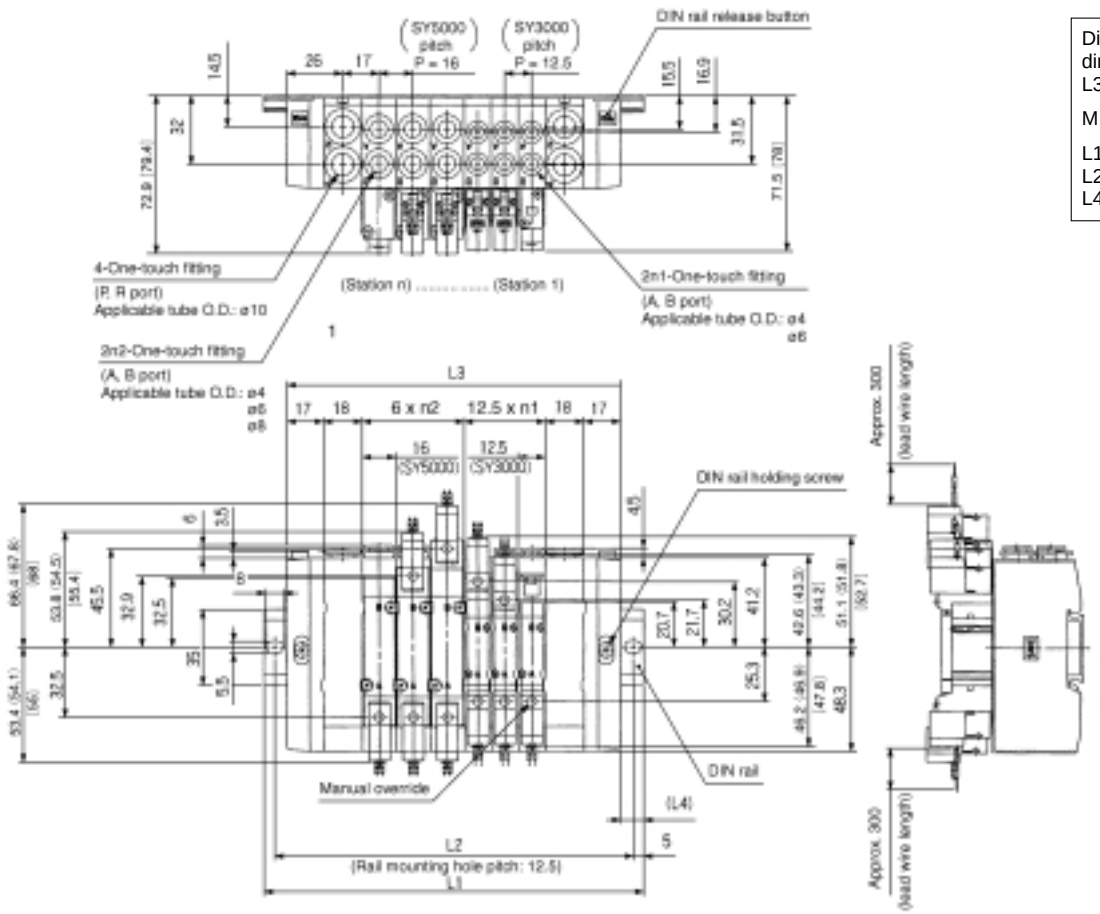

Dimension L: Formulas for dimensions L1 to L4
L3 = 12.5 x n1 + 16 x n2 + 70
$M = (\frac{L3}{12.5} + 1)$ omit decimals
L1 = 12.5 x M + 23
L2 = L1 – 10.5
L4 = (L1 – L3)/2

n1: Number of SY3000 stations
n2: Number of SY5000 stations

Order Made Specifications *SY5000/7000/9000/SY500*
DIN Connector (DIN 43650C Standard)

DIN connector type with conformity to DIN43650C (8mm pitch between DIN terminals) standard

Order Made

How to Order Valves

3 port valve: (5 port valve mixed mounting type) **SY 5 1 3 □ – 5 Y □ □ – □**

5 port valve: **SY 5 2 2 0 □ – 5 Y □ □ – □**

Series

5	SY500

Type of actuation

1	Normally open
2	Normally closed

Body type

3	Body ported
5	Base mounted

A/B port size

Symbol	Port size
Nil	Base mounted
01	Rc 1/8
C4	ø4 One-touch fitting
C6	ø6 One-touch fitting
C8	ø8 One-touch fitting

Series

5	SY5000
7	SY7000
9	SY9000

Type of actuation

1	2 position single
2	2 position double
3	3 position closed center
4	3 position exhaust center
5	3 position pressure center

Body type

2	Body ported
4	2 position single

Pilot type

Nil	Internal pilot
R	External pilot

* Only base mounted type available for "R"

Rated voltage

DC specifications	
5	24VDC
6	12VDC
AC specifications (50/60Hz)	
1	100VAC
2	200VAC
3	110VAC [115VAC]
4	220VAC [230VAC]

Electrical entry

Y: With connector

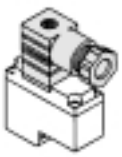

YO: Without connector

A/B port size

Body ported

Symbol	Port size	Applicable series
01	Rc 1/8	SY5000
C4	ø4 One-touch fitting	
C6	ø6 One-touch fitting	
C8	ø8 One-touch fitting	
02	Rc 1/4	SY7000
C8	ø8 One-touch fitting	
C10	ø10 One-touch fitting	
C8	ø8 One-touch fitting	SY9000
C10	ø10 One-touch fitting	
C12	ø12 One-touch fitting	
02	Rc 1/4	
03	Rc 3/8	

Base mounted

Symbol	Port size	Applicable series
Nil	Without sub-plate	
02	Rc 1/4 with sub-plate	SY5000 SY7000
03	Rc 3/8 with sub-plate	SY7000 SY9000
04	Rc 1/2 with sub-plate	SY9000

Indicator light/Surge voltage suppressor

Nil	Without indicator light/surge voltage suppressor
S	With surge voltage suppressor
Z	With indicator light/surge voltage suppressor

Note 1) "YOZ" is not available.
Note 2) For AC, there is no "S" specification, since it is integrated with the rectifier.

Manual override

Nil	Non-locking push type
D	Push-turn locking slotted type
E	Push-turn locking lever type

Note) When single body ported solenoid valves are ordered, manifold mounting bolts and gaskets are not included. Order them separately if necessary. (Refer to page 56 for details.)

How to Order Pilot Valves

SY115 – 5 Y □

Rated voltage

DC specifications	
5	24VDC
6	12VDC
AC specifications (50/60Hz)	
1	100VAC
2	200VAC
3	110VAC [115VAC]
4	220VAC [230VAC]

Indicator light/Surge voltage suppressor

Nil	Without indicator light/surge voltage suppressor
S	With surge voltage suppressor
Z	With indicator light/surge voltage suppressor

Note 1) "YOZ" is not available.
Note 2) For AC, there is no "S" specification, since it is integrated with the rectifier.

Electrical entry

Y	DIN terminal	With connector
YO		Without connector

DIN connector part nos.

Without indicator light	SY100-82-1

With indicator light

Rated voltage	Rating symbol	Part no.
24VDC	24VN	SY100-82-3-05
12VDC	12VN	SY100-82-3-06
100VAC	100VN	SY100-82-3-01
200VAC	200VN	SY100-82-3-02
110VAC (115VAC)	110VN	SY100-82-3-03
220VAC (230VAC)	220VN	SY100-82-3-04

⚠Caution

1. Use the specified heavy duty vinyl cord (ø3.5 to ø7) to meet the IP65 (enclosure) standard. Also, tighten the ground nut and holding screws within the specified torque range. Refer to page 236 for DIN terminal usage (hints on connecting and changing the outlet, precautions, compatible cables, and circuit diagram).
2. Since the pitch between DIN terminals is 9.4mm for the "D" type DIN connector, it is not interchangeable.
3. DIN connectors other than the "D" type have "N" at the end of the rating symbol. (Although "N" is not indicated when the connector is without the indicator light, it can be distinguished by the label.)
4. Dimensions are the same as the "D" type DIN connector.
5. When replacing only the pilot assembly, SY115-□D and SY115-□Y are interchangeable. However, changing from SY114 (G, L, M) to SY115-□D/□Y (DIN terminal), or vice versa, is not possible.

Order Made Specifications *SY3000/5000/7000/9000*
Body Ported Type with External Pilot Main Valve Fluoro Rubber Specification Energy Saving Solenoid Valve

Order Made

Body Ported Type with External Pilot

Applicable solenoid valve series: SY3□20, SY5□20, SY7□20

Part number: SY 3/5/7 □ 20 – □□□□ – □ – □ – X20

● **Enter in the same manner as the standard product.**

Operating pressure range MPa

Operating pressure range	–100kPa to 0.7
Pilot pressure range	0.25 to 0.7

Dimensions

SY3000: Overall length will be 6.5mm longer.
SY5000/7000: Overall length will be 10mm longer.

External pilot port size

Series	Port size
SY3000	M3 x 0.5
SY5/7000	M5 x 0.8

JIS symbols

Body ported
2 position single

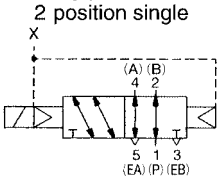

3 position closed center

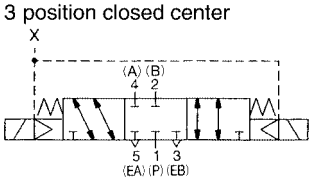

2 position double

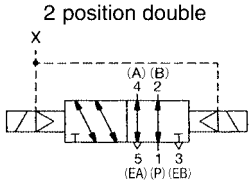

3 position exhaust center

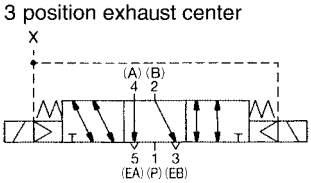

3 position pressure center

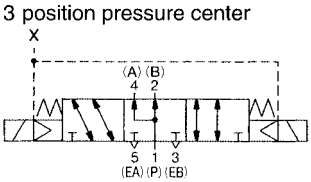

Main Valve Fluoro Rubber Specification

The use of fluoro rubber for the main valve can be applied in situations such as the following.

- When a turbine oil other than the recommended type is used and swelling of the spool valve seal causes or may cause malfunction.

Applicable solenoid valve series: SY3□$^{2}_{4}$0, SY5□$^{2}_{4}$0, SY7□$^{2}_{4}$0, SY9□$^{2}_{4}$0

Part number: SY 3/5/7/9 □ 20/40 – □□□□ – □ – □ – X90

● **Enter in the same manner as the standard product.**

Specifications and performance are the same as the standard product.

Energy Saving Solenoid Valve (Contact SMC for details on specifications and lead time.)

Power consumption is reduced to approximately 1/3 of the standard product by cutting the excess power used for holding valves in an energized condition.
(Effective when energized with the rated voltage of 24VDC for more than 62ms.)

Specifications

Series		SY 3000/5000/7000/9000 T
Rated coil voltage V		24DC, 12DC
Power consumption W	Inrush	0.55
	Holding	0.22

Specifications other than above are the same as the standard product.

Applicable solenoid valve series: SY3□$^{2}_{4}$0, SY5□$^{2}_{4}$0, SY7□$^{2}_{4}$0, SY9□$^{2}_{4}$0

(Except DIN terminal type)

How to order

SY 3/5/7/9 □□□ T – □□ Z □ – □ – □

● **Rated Voltage**

5	24VDC
6	12VDC

● **Enter in the same manner as the standard product.**

Dimensions are the same as the standard product.

Working Principle

The circuit shown below reduces current consumption when holding, which facilitates overall energy savings.
Refer to the power waveform shown below.

Electrical circuit (with power saving circuit)

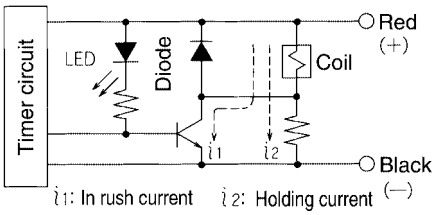

<Energy saving type power waveform for SY 3000/5000/7000/9000 T>

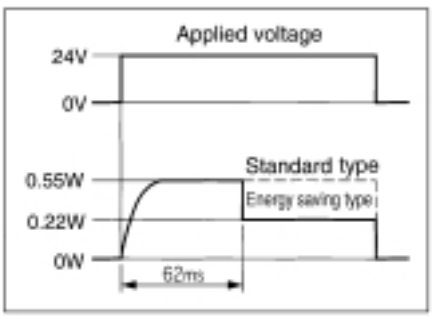

Copy this page for use as needed.

Date: / /

Customer name	
Contact person	
Specification sheet no.	
Purchase order no.	
Equipment name	
Quantity	set(s) Required date

SY3000: Standard Manifold

Manifold Specification Sheet

Follow procedures ① through ③.

❶ Manifold Type

Enter a "○" for the manifold type to be used and enter requirements in the available boxes for that manifold.

Enter "○".

☐ **Top ported (type 20)** **SS5Y3 — 20 — ☐**

☐ **Side ported (type 41, 42)** **SS5Y3 — ☐ — ☐ — ☐**

Base type

41	Type 41
42	Type 42

Stations

02	2 stations
⋮	⋮
20	20 stations

A/B port size

M5	M5 x 0.8	Type 41
01	Rc 1/8	Type 42
C4	ø4 One-touch fitting	Type 41, 42
C6	ø6 One-touch fitting	Type 41, 42

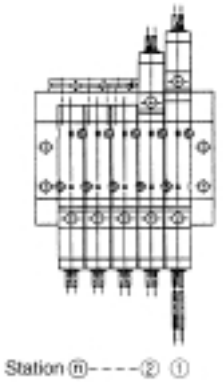

❷ Valve Type

Enter the symbols for required specifications as indicated below.

SY3 ∗ 2/4 0 ∗ — ☐ ☐ ☐ ☐ — ☐

Ⓐ Ⓑ Ⓒ Ⓓ Ⓔ

Note) SY3☐20-☐☐☐☐-☐☐ is for type 20 manifolds.
SY3☐40-☐☐☐☐ is for type 41 and 42 manifolds.
SY3☐40R-☐☐☐☐ is for type 42 manifolds.

Type of actuation

1	2 position single solenoid
2	2 position double solenoid
3	3 position closed center
4	3 position exhaust center
5	3 position pressure center

Indicate in the station table below.

Pilot type

Nil	Internal pilot
R	External pilot (type 3☐40 only, for type 42 base)

When using an external pilot valve, enter a "○" in the appropriate box for "External Pilot Specification".

Ⓐ Rated voltage

DC specifications

5	24VDC
6	12VDC
V	6VDC
S	5VDC
R	3VDC

AC specifications (50/60Hz)

1	100VAC
2	200VAC
3	110VAC [115VAC]
4	220VAC [230VAC]

Ⓑ Electrical entry

G	Grommet (lead wire length 300mm)	
H	Grommet (lead wire length 600mm)	
L	L type plug connector	With lead wire
LN		Without lead wire
LO		Without connector
M	M type plug connector	With lead wire
MN		Without lead wire
MO		Without connector

Ⓒ Indicator light/ Surge voltage suppressor

Nil	Without indicator light/ surge voltage suppressor
S	With surge voltage suppressor
Z	With indicator light/ surge voltage suppressor
R	With surge voltage suppressor (non-polar)
U	With indicator light/ surge voltage suppressor (non-polar)

Note 1) For AC, there is no "S" specification, since it is integrated with the rectifier.

Note 2) "R" and "U" are available for DC only.

Ⓓ Manual override

Nil	Non-locking push type
D	Push-turn locking slotted type
E	Push-turn locking lever type

Ⓔ A/B port size

Nil	For type 41 and 42 manifolds	
M5	M5 x 0.8	For type 20 manifolds
C4	ø4 One-touch fitting	
C6	ø6 One-touch fitting	
Note)	Mixed mounting	

Note) For the type 20 mixed mounting sepcification, it is not necessary to indicate a symbol in the Ⓔ box. Instead, specify a symbol (M5, C4, etc.) in place of a "○" in the station table below.

❸ Stations

Indicate the type of actuation and layout of valves with a "○". However, for an interface regulator with gauge, indicate with a "G" instead of "○".

	Stations	20	19	18	17	16	15	14	13	12	11	10	9	8	7	6	5	4	3	2	1	Quantity
2 position	Single solenoid																					
	Double solenoid																					
3 position	Closed center																					
	Exhaust center																					
	Pressure center																					
3 port valve	N.C. single																					
	N.C. double																					
	N.O. single																					
	N.O. double																					
External pilot specification (Enter only for external pilot)																						
Options	Blanking plate assembly																					
	Individual SUP spacer assembly																					
	Individual EXH spacer assembly																					
	Interface regulator (P regulated)																					
	Interface regulator (A1 regulated)																					
	Interface regulator (B1 regulated)																					

Notes: • Blanking plate assembly: SY3000-26-9A (Type 20), SY3000-26-9A (Type 41, 42)
• Individual SUP spacer assembly: SY3000-38-20A (Type 20), SY3000-38-2A (Type 41, 42)
• Individual EXH spacer assembly: SY3000-39-20A (Type 20), SY3000-39-2A (Type 41, 42)
• Interface regulator: ARBY3000-☐-☐-2 (Type 41, 42)

For SMC use only

Enter ordered part numbers.

	Part no.	Qty.

	Part no.	Qty.

Order no.	
Clerk (code no.)	
Dept. code	

• Refer to pages 157 and 158 for 3 port valve part numbers.
• Refer to page 238 for interface regulator part numbers. Also, for interface regulators with gauge, the part numbers for odd number and even number stations are different.

Copy this page for use as needed.

Date: / /

SY5000: Standard Manifold

Manifold Specification Sheet

Customer name	
Contact person	
Specification sheet no.	
Purchase order no.	
Equipment name	
Quantity	set(s) Required date

Follow procedures ① through ③.

❶ Manifold Type

Enter a "○" for the manifold type to be used and enter requirements in the available boxes for that manifold.

Enter "○".

☐ Top ported (type 20) **SS5Y5 – 20 –** ☐

☐ Side ported (type 41, 42) **SS5Y5 –** ☐ – ☐ – ☐

Base type

41	Type 41
42	Type 42

Stations

02	2 stations
⋮	⋮
20	20 stations

A/B port size

01	Rc 1/8	Type 41
02	Rc 1/4	Type 42
C6	ø6 One-touch fitting	Type 41, 42
C8	ø8 One-touch fitting	Type 41, 42

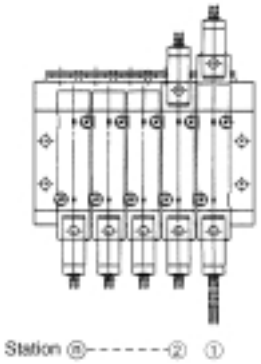

Note) SY3□20-□□□□-□□ is for type 20 manifolds.
SY3□40-□□□□ is for type 41 and 42 manifolds.
SY3□40R-□□□□ is for type 42 manifolds.

❷ Valve Type

Enter the symbols for required specifications as indicated below.

SY5 ∗ 2/4 0 ∗ – Ⓐ Ⓑ Ⓒ Ⓓ Ⓔ

Type of actuation

1	2 position single solenoid
2	2 position double solenoid
3	3 position closed center
4	3 position exhaust center
5	3 position pressure center

Indicate in the station table below.

Pilot type

Nil	Internal pilot
R	External pilot (type 5□40 only, for type 42 base)

When using an external pilot valve, enter a "○" in the appropriate box for "External Pilot Specification".

Ⓐ Rated voltage

DC specifications

5	24VDC
6	12VDC
V	6VDC
S	5VDC
R	3VDC

AC specifications (50/60Hz)

1	100VAC
2	200VAC
3	110VAC [115VAC]
4	220VAC [230VAC]

Note) DC specification of "D", "DO", "Y", and "YO" types are only available in 24VDC and 12VDC.

Ⓑ Electrical entry

G	Grommet (lead wire length 300mm)	
H	Grommet (lead wire length 600mm)	
L	L type plug connector	With lead wire
LN		Without lead wire
LO		Without connector
M	M type plug connector	With lead wire
MN		Without lead wire
MO		Without connector
D	DIN terminal	With connector
DO		Without connector
Y*	DIN terminal	With connector
YO*		Without connector

∗ Refer to page 189.

Ⓒ Indicator light/ Surge voltage suppressor

Nil	Without indicator light/ surge voltage suppressor
S	With surge voltage suppressor
Z	With indicator light/ surge voltage suppressor
R	With surge voltage suppressor (non-polar)
U	With indicator light/ surge voltage suppressor (non-polar)

Note 1) For AC, there is no "S" specification, since it is integrated with the rectifier.
Note 2) Since "D", "DO", "Y", and "YO" are non-polar types, "R" and "U" are not available.
Note 3) "DOZ" and "YOZ" are not available.
Note 4) "R" and "U" are available for DC only.

Ⓓ Manual override

Nil	Non-locking push type
D	Push-turn locking slotted type
E	Push-turn locking lever type

Ⓔ A/B port size

Nil	For type 41 and 42 manifolds	
01	Rc 1/8	For type 20 manifolds
C4	ø4 One-touch fitting	
C6	ø6 One-touch fitting	
C8	ø8 One-touch fitting	
Note)	Mixed mounting	

Note) For the type 20 mixed mounting sepcification, it is not necessary to indicate a symbol in the Ⓔ box. Instead, specify a symbol (0.1, C4, etc.) in place of a "○" in the station table below.

❸ Stations

Indicate the type of actuation and layout of valves with a "○". However, for an interface regulator with gauge, indicate with a "G" instead of "○".

	Stations	20	19	18	17	16	15	14	13	12	11	10	9	8	7	6	5	4	3	2	1	Quantity
2 position	Single solenoid																					
	Double solenoid																					
3 position	Closed center																					
	Exhaust center																					
	Pressure center																					
3 port valve	N.C. single																					
	N.C. double																					
	N.O. single																					
	N.O. double																					
External pilot specification (Enter only for external pilot)																						
Options	Blanking plate assembly																					
	Individual SUP spacer assembly																					
	Individual EXH spacer assembly																					
	Interface regulator (P regulated)																					
	Interface regulator (A1 regulated)																					
	Interface regulator (B1 regulated)																					

Notes: • Blanking plate assembly: SY5000-26-18A (Type 20), SY5000-26-18A (Type 41, 42)
• Individual SUP spacer assembly: SY5000-38-1A (Type 20), SY5000-38-2A (Type 41, 42)
• Individual EXH spacer assembly: SY5000-39-1A (Type 20), SY5000-39-2A (Type 41, 42)
• Interface regulator: ARBY5000-□-□-2 (Type 41, 42)

For SMC use only

Enter ordered part numbers.

	Part no.	Qty.

	Part no.	Qty.

Order no.	
Clerk (code no.)	
Dept. code	

• Refer to pages 157 and 158 for 3 port valve part numbers.
• Refer to page 238 for interface regulator part numbers.

Copy this page for use as needed.

Date: / /

SY7000: Standard Manifold

Manifold Specification Sheet

Customer name	
Contact person	
Specification sheet no.	
Purchase order no.	
Equipment name	
Quantity	set(s) Required date

Follow procedures ① through ③.

❶ Manifold Type

Enter a "○" for the manifold type to be used and enter requirements in the available boxes for that manifold.

Enter "○".

☐ **Top ported (type 20)** **SS5Y7 − 20 −** ☐

☐ **Side ported (type 42)** **SS5Y7 − 42 −** ☐ − ☐

Stations

02	2 stations
⋮	⋮
20	20 stations

A/B port size

02	Rc 1/4
C10	ø10 One-touch fitting

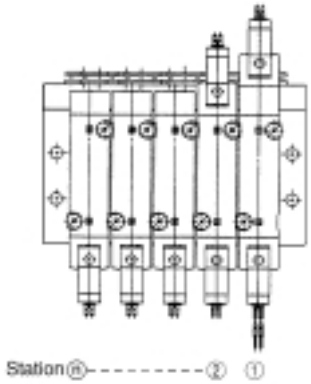

Note) SY7□20-□□□□-□□ is for type 20 manifolds.
SY7□40-□□□□ is for type 42 manifolds.

❷ Valve Type

Enter the symbols for required specifications as indicated below.

SY7 ∗ 2/4 0 ∗ − ☐ ☐ ☐ ☐ − ☐

Ⓐ Ⓑ Ⓒ Ⓓ Ⓔ

Type of actuation

1	2 position single solenoid
2	2 position double solenoid
3	3 position closed center
4	3 position exhaust center
5	3 position pressure center

Indicate in the station table below.

Pilot type

Nil	Internal pilot
R	External pilot (type 7□40 only, for type 42 base)

When using an external pilot valve, enter a "○" in the appropriate box for "External Pilot Specification".

Ⓐ Rated voltage

DC specifications

5	24VDC
6	12VDC
V	6VDC
S	5VDC
R	3VDC

AC specifications (50/60Hz)

1	100VAC
2	200VAC
3	110VAC [115VAC]
4	220VAC [230VAC]

Note) DC specification of "D", "DO", "Y", and "YO" types are only available in 24VDC and 12VDC.

Ⓑ Electrical entry

G	Grommet (lead wire length 300mm)	
H	Grommet (lead wire length 600mm)	
L	L type plug connector	With lead wire
LN		Without lead wire
LO		Without connector
M	M type plug connector	With lead wire
MN		Without lead wire
MO		Without connector
D	DIN terminal	With connector
DO		Without connector
Y∗	DIN terminal	With connector
YO∗		Without connector

∗ Refer to page 189.

Ⓒ Indicator light/ Surge voltage suppressor

Nil	Without indicator light/ surge voltage suppressor
S	With surge voltage suppressor
Z	With indicator light/ surge voltage suppressor
R	With surge voltage suppressor (non-polar)
U	With indicator light/ surge voltage suppressor (non-polar)

Note 1) For AC, there is no "S" specification, since it is integrated with the rectifier.

Note 2) Since "D", "DO", "Y", and "YO" are non-polar types, "R" and "U" are not available.

Note 3) "DOZ" and "YOZ" are not available.

Note 4) "R" and "U" are available for DC only.

Ⓓ Manual override

Nil	Non-locking push type
D	Push-turn locking slotted type
E	Push-turn locking lever type

Ⓔ A/B port size

Nil	For type 42 manifolds	
02	Rc 1/4	For type 20 manifolds
C8	ø8 One-touch fitting	
C10	ø10 One-touch fitting	
Note)	Mixed mounting	

Note) For the type 20 mixed mounting sepcification, it is not necessary to indicate a symbol in the Ⓔ box. Instead, specify a symbol (0.2, C8, etc.) in place of a "○" in the station table below.

❸ Stations

Indicate the type of actuation and layout of valves with a "○".

	Stations	20	19	18	17	16	15	14	13	12	11	10	9	8	7	6	5	4	3	2	1	Quantity
2 position	Single solenoid																					
	Double solenoid																					
3 position	Closed center																					
	Exhaust center																					
	Pressure center																					
External pilot specification (Enter only for external pilot)																						
Options	Blanking plate assembly																					
	Individual SUP spacer assembly																					
	Individual EXH spacer assembly																					

Notes: • Blanking plate assembly: SY7000-26-20A (Type 20), SY7000-26-20A (Type 42)
• Individual SUP spacer assembly: SY7000-38-1A (Type 20), SY7000-38-2A (Type 42)
• Individual EXH spacer assembly: SY7000-39-1A (Type 20), SY7000-39-2A (Type 42)

For SMC use only

Enter ordered part numbers.

	Part no.	Qty.

	Part no.	Qty.

Order no.	
Clerk (code no.)	
Dept. code	

Copy this page for use as needed.

Date: / /

SY9000: Standard Manifold

Body Ported

Manifold Specification Sheet

Customer name	
Contact person	
Specification sheet no.	
Purchase order no.	
Equipment name	
Quantity	set(s) Required date

Follow procedures ① through ③.

❶ Manifold Type

Enter the symbols for required specifications in the boxes below.

SS5Y9 − 23 □ − □

(Maximum number of valves: 20 stations)

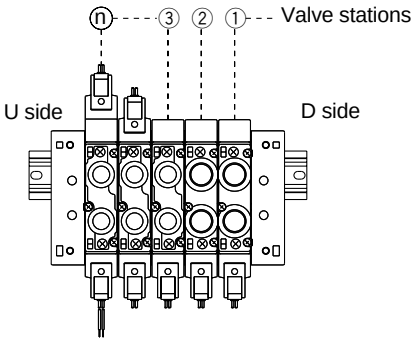

Stations

Symbol	Stations
02	2 stations
⋮	⋮
20	20 stations

∗ Includes the number of blanking plate assemblies.

Option

Symbol	Mounting type
Nil	Direct mount
D	DIN rail mount (with DIN rail)
DO	DIN rail mount (without DIN rail)
D∗	When a DIN rail longer than the specified stations is necessary, indicate the number of required stations in the area shown by an asterisk (∗).

❷ Valve Type

Enter the symbols for required specifications as indicated below.

SY9 ∗ 20 ∗ − □□□□ − □

Ⓐ Ⓑ Ⓒ Ⓓ Ⓔ

Type of actuation

1	2 position single solenoid
2	2 position double solenoid
3	3 position closed center
4	3 position exhaust center
5	3 position pressure center

Indicate in the station table below.

Pilot type

Nil	Internal pilot
R	External pilot

When using an external pilot valve, enter a "○" in the ⓑ section of the station table below.

Ⓐ Rated voltage

DC specifications

5	24VDC
6	12VDC
V	6VDC
S	5VDC
R	3VDC

AC specifications (50/60Hz)

1	100VAC
2	200VAC
3	110VAC [115VAC]
4	220VAC [230VAC]

Note) DC specification of "D", "DO", "Y", and "YO" types are only available in 24VDC and 12VDC.

Ⓑ Electrical entry

G	Grommet (lead wire length 300mm)	
H	Grommet (lead wire length 600mm)	
L	L type plug connector	With lead wire
LN		Without lead wire
LO		Without connector
M	M type plug connector	With lead wire
MN		Without lead wire
MO		Without connector
D	DIN terminal	With connector
DO		Without connector
Y∗	DIN terminal	With connector
YO∗		Without connector

∗ Refer to page 189.

Ⓒ Indicator light/ Surge voltage suppressor

Nil	Without indicator light/ surge voltage suppressor
S	With surge voltage suppressor
Z	With indicator light/ surge voltage suppressor
R	With surge voltage suppressor (non-polar)
U	With indicator light/ surge voltage suppressor (non-polar)

Note 1) For AC, there is no "S" specification, since it is integrated with the rectifier.

Note 2) Since "D", "DO", "Y", and "YO" are non-polar types, "R" and "U" are not available.

Note 3) "DOZ" and "YOZ" are not available.

Note 4) "R" and "U" are available for DC only.

Ⓓ Manual override

Nil	Non-locking push type
D	Push-turn locking slotted type
E	Push-turn locking lever type

Ⓔ A/B port size

02	Rc 1/4
03	Rc 3/8
C8	ø8 One-touch fitting
C10	ø10 One-touch fitting
C12	ø12 One-touch fitting
Note)	Mixed mounting

Note) For the mixed mounting sepcification, it is not necessary to indicate a symbol in the Ⓔ box. Instead, specify a symbol (0.2, C8, etc.) in place of a "○" in the station table below.

❸ Stations

Indicate the type of actuation and layout of valves with a "○".
[When A/B port sizes are mixed, indicate symbols (C8, C10, etc.) in the ⓐ section.]

		Stations					20	19	18	17	16	15	14	13	12	11	10	9	8	7	6	5	4	3	2	1	Quantity
ⓐ	2 position	Single solenoid																									
		Double solenoid																									
	3 position	Closed center																									
		Exhaust center																									
		Pressure center																									
	Blanking plate assembly																										
ⓑ	External pilot specification (Enter only for external pilot)																										
ⓒ	SUP block disc																										
	EXH block disc (2 pcs./location)																										
ⓓ	Options	Individual SUP spacer assembly																									
		Individual EXH spacer assembly																									

Notes:
- Blanking plate assembly: SY9000-26-1A
- SUP block disc: SY9000-61-2A
- EXH block disc: SY9000-61-2A (2 pcs./location)
- Individual SUP spacer assembly: SY9000-38-1A
- Individual EXH spacer assembly: SY9000-39-1A

For SMC use only

Enter ordered part numbers.

	Part no.	Qty.

	Part no.	Qty.

Order no.	
Clerk (code no.)	
Dept. code	

Copy this page for use as needed.

Date: / /

SY9000: Standard Manifold

Base Mounted

Manifold Specification Sheet

Customer name			
Contact person			
Specification sheet no.			
Purchase order no.			
Equipment name			
Quantity	set(s)	Required date	

Follow procedures ① through ③.

❶ Manifold Type

Enter the symbols for required specifications in the boxes below.

SS5Y9 − 43 − □ □ □ − □ − □

Stations

Symbol	Stations
02	2 stations
⋮	⋮
20	20 stations

∗ Includes the number of blanking plate assemblies.

P/R port outlet position

Symbol	Outlet position	Applicable stations
U	U side	2 to 10 stations
D	D side	
B	Both sides	2 to 20 stations

Note) When using SUP and EXH block discs, specify "B" for the SUP/EXH block mounting position.

SUP/EXH block assembly specification

Symbol	Specification
Nil	Standard/Internal pilot
R	External pilot
S	Internal pilot/Built-in silencer
RS	External pilot/Built-in silencer

Option

Symbol	Mounting type
Nil	Direct mount
D	DIN rail mount (with DIN rail)
DO	DIN rail mount (without DIN rail)
D∗	When a DIN rail longer than the specified stations is necessary, indicate the number of required stations in the area shown by an asterisk (∗).

A/B port size

Symbol	Specification
C8	ø8 One-touch fitting
C10	ø10 One-touch fitting
C12	ø12 One-touch fitting
02	Rc 1/4
03	Rc 3/8
M	Mixed mounting

Note) For mixed mounting, indicate symbols (C8, C10, etc.) in the ⓐ section of the station table.

(Maximum number of valves: 20 stations)

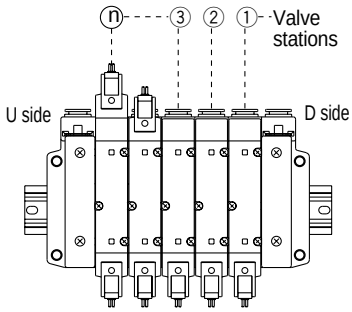

❷ Valve Type

Enter the symbols for required specifications as indicated below.

SY9 ∗ 40 ∗ − □ □ □ □

Ⓐ Ⓑ Ⓒ Ⓓ

Type of actuation

1	2 position single solenoid
2	2 position double solenoid
3	3 position closed center
4	3 position exhaust center
5	3 position pressure center

Indicate in the station table below.

Pilot type

Nil	Internal pilot
R	External pilot

When using an external pilot valve, enter a "○" in the ⓑ section of the station table below.

Ⓐ Rated voltage

DC specifications

5	24VDC
6	12VDC
V	6VDC
S	5VDC
R	3VDC

AC specifications (50/60Hz)

1	100VAC
2	200VAC
3	110VAC [115VAC]
4	220VAC [230VAC]

Note) DC specification of "D", "DO", "Y", and "YO" types are only available in 24VDC and 12VDC.

Ⓑ Electrical entry

G	Grommet (lead wire length 300mm)	
H	Grommet (lead wire length 600mm)	
L	L type plug connector	With lead wire
LN		Without lead wire
LO		Without connector
M	M type plug connector	With lead wire
MN		Without lead wire
MO		Without connector
D	DIN terminal	With connector
DO		Without connector
Y∗	DIN terminal	With connector
YO∗		Without connector

∗ Refer to page 189.

Ⓒ Indicator light/ Surge voltage suppressor

Nil	Without indicator light/ surge voltage suppressor
S	With surge voltage suppressor
Z	With indicator light/ surge voltage suppressor
R	With surge voltage suppressor (non-polar)
U	With indicator light/ surge voltage suppressor (non-polar)

Note 1) For AC, there is no "S" specification, since it is integrated with the rectifier.

Note 2) Since "D", "DO", "Y", and "YO" are non-polar types, "R" and "U" are not available.

Note 3) "DOZ" and "YOZ" are not available.

Note 4) "R" and "U" are available for DC only.

Ⓓ Manual override

Nil	Non-locking push type
D	Push-turn locking slotted type
E	Push-turn locking lever type

❸ Stations

Indicate the type of actuation and layout of valves with a "○".
[When A/B port sizes are mixed, indicate symbols (C8, C10, etc.) in the ⓐ section.]

		Stations					20	19	18	17	16	15	14	13	12	11	10	9	8	7	6	5	4	3	2	1	Quantity
ⓐ	2 position	Single solenoid																									
		Double solenoid																									
	3 position	Closed center																									
		Exhaust center																									
		Pressure center																									
	Blanking plate assembly																										
ⓑ	External pilot specification (Enter only for external pilot)																										
ⓒ	SUP block disc																										
	EXH block disc (2 pcs./location)																										
ⓓ	Options	Individual SUP spacer assembly																									
		Individual EXH spacer assembly																									

Notes:
- Blanking plate assembly: SY9000-26-2A
- SUP block disc: SY9000-57-1A
- EXH block disc: SY9000-57-1A (2 pcs./location)
- Individual SUP spacer assembly: SY9000-38-2A
- Individual EXH spacer assembly: SY9000-39-2A

For SMC use only

Enter ordered part numbers.

	Part no.	Qty.

	Part no.	Qty.

Order no.	
Clerk (code no.)	
Dept. code	

Copy this page for use as needed.

Date: / /

SY3000: Flat Ribbon Cable

Manifold Specification Sheet

Customer name	
Contact person	
Specification sheet no.	
Purchase order no.	
Equipment name	
Quantity	set(s) Required date

Follow procedures ① through ③.

❶ Manifold Type

Enter a "○" for the manifold type to be used and enter requirements in the available boxes for that manifold.

Enter "○".

□ **Top ported (type 20P)** **SS5Y3 — 20P —** □

□ **Side ported (type 41P, 42P)** **SS5Y3 —** □ **P —** □ **—** □

Base type

41	Type 41
42	Type 42

Stations

04	4 stations
⋮	⋮
12	12 stations

A/B port size

M5	M5 x 0.8	Type 41P
01	Rc 1/8	Type 42P
C4	ø4 One-touch fitting	Type 41P, 42P
C6	ø6 One-touch fitting	Type 41P, 42P

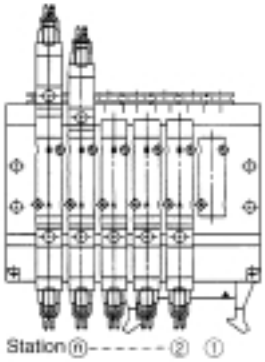

Note) SY3□20-□LO$^{U}_{Z}$□-□ is for type 20P manifolds.
SY3□40-□LO$^{U}_{Z}$□ is for type 41P and 42P manifolds.
SY3□40R-□LO$^{U}_{Z}$□ is for type 42P manifolds.

❷ Valve Type

Enter the symbols for required specifications as indicated below.

For DC: SY3 ∗ $^{2}_{4}$ 0 ∗ — Ⓐ LO Ⓒ — Ⓓ — Ⓔ

For AC: SY3 ∗ $^{2}_{4}$ 0 ∗ — Ⓑ LOZ — Ⓓ — Ⓔ

Type of actuation

1	2 position single solenoid
2	2 position double solenoid
3	3 position closed center
4	3 position exhaust center
5	3 position pressure center

Indicate in the station table below.

Pilot type

Nil	Internal pilot
R	External pilot (type 3□40 only, for type 42P base)

When using an external pilot valve, enter a "○" in the appropriate box for "External Pilot Specification".

Ⓐ Rated voltage

5	24VDC
6	12VDC

Ⓑ Rated voltage

1	100VAC
3	110VAC [115VAC]

Ⓓ Manual override

Nil	Non-locking push type
D	Push-turn locking slotted type
E	Push-turn locking lever type

Ⓒ Indicator light/Surge voltage suppressor

Z	With indicator light/surge voltage suppressor
U	With indicator light/surge voltage suppressor (non-polar)

Note) Only positive COM specification is available for "Z".

Ⓔ A/B port size

Nil	For type 41P and 42P manifolds	
M5	M5 x 0.8	For type 20P manifolds
C4	ø4 One-touch fitting	For type 20P manifolds
C6	ø6 One-touch fitting	For type 20P manifolds
Note)	Mixed mounting	For type 20P manifolds

Note) For the type 20 mixed mounting sepcification, it is not necessary to indicate a symbol in the Ⓔ box. Instead, specify a symbol (M5, C4, etc.) in place of a "○" in the station table below.

❸ Stations

Indicate the type of actuation and layout of valves with a "○". However, for an interface regulator with gauge, indicate with a "G" instead of "○".

	Stations	12	11	10	9	8	7	6	5	4	3	2	1	Quantity
2 position	Single solenoid													
	Double solenoid													
3 position	Closed center													
	Exhaust center													
	Pressure center													
3 port valve	N.C. single													
	N.C. double													
	N.O. single													
	N.O. double													
External pilot specification (Enter only for external pilot)														
Options	Blanking plate assembly													
	Individual SUP spacer assembly													
	Individual EXH spacer assembly													
	Interface regulator (P regulated)													
	Interface regulator (A1 regulated)													
	Interface regulator (B1 regulated)													

Notes: • Blanking plate assembly: SY3000-26-10A (Type 20P), SY3000-26-10A (Type 41P, 42P)
• Individual SUP spacer assembly: SY3000-38-20A (Type 20P), SY3000-38-2A (Type 41P, 42P)
• Individual EXH spacer assembly: SY3000-39-20A (Type 20P), SY3000-39-2A (Type 41P, 42P)
• Interface regulator: ARBY3000-□-□-2 (Type 41, 42)

For SMC use only

Indicate connector assemblies with a "○" in accordance with the valve specifications.

Stations	12	11	10	9	8	7	6	5	4	3	2	1	Quantity	For DC	For 100VAC	For 110VAC
Connector assembly (for 2 position single)														SY3000-37-3A	SY3000-37-32A	SY3000-37-35A
Connector assembly (for 2 position double, 3 position)														SY3000-37-4A	SY3000-37-33A	SY3000-37-36A
Connector assembly (for 2 position single, with spacer assembly)														SY5000-37-3A	SY5000-37-15A	SY5000-37-19A
Connector assembly (for 2 position double, 3 position, with spacer assembly)														SY3000-37-6A	SY3000-37-34A	SY3000-37-37A

Enter ordered part numbers.

	Part no.	Qty.

	Part no.	Qty.

Order no.	
Clerk (code no.)	
Dept. code	

• Refer to pages 157 and 158 for 3 port valve part numbers.
• Refer to page 238 for interface regulator part numbers. Also, for interface regulators with gauge, the part numbers for odd number and even number stations are different.

Copy this page for use as needed.

Date: / /

SY5000: Flat Ribbon Cable

Manifold Specification Sheet

Customer name	
Contact person	
Specification sheet no.	
Purchase order no.	
Equipment name	
Quantity	set(s) Required date

Follow procedures ① through ③.

① Manifold Type

Enter a "○" for the manifold type to be used and enter requirements in the available boxes for that manifold.

Enter "○".

Top ported (type 20P) **SS5Y5 — 20P —** □

Side ported (type 41P, 42P) **SS5Y5 —** □ **P —** □ **—** □

Base type

41	Type 41
42	Type 42

Stations

03	3 stations
⋮	⋮
12	12 stations

A/B port size

01	Rc 1/8	Type 41P
02	Rc 1/4	Type 42P
C6	ø6 One-touch fitting	Type 41P, 42P
C8	ø8 One-touch fitting	Type 41P, 42P

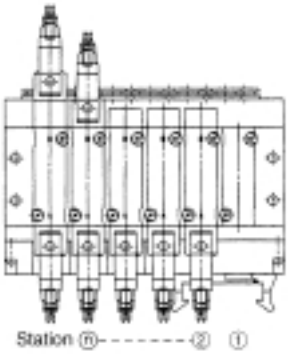

② Valve Type

Enter the symbols for required specifications as indicated below.

Note) SY5□20-□LO$^{U}_{Z}$□-□ is for type 20P manifolds.
SY5□40-□LO$^{U}_{Z}$□ is for type 41P and 42P manifolds.
SY5□40R-□LO$^{U}_{Z}$□ is for type 42P manifolds.

For DC: **SY5 ∗ $^{2}_{4}$ 0 ∗ — Ⓐ LO Ⓒ — Ⓓ — Ⓔ**

For AC: **SY5 ∗ $^{2}_{4}$ 0 ∗ — Ⓑ LOZ — Ⓓ — Ⓔ**

Type of actuation

1	2 position single solenoid
2	2 position double solenoid
3	3 position closed center
4	3 position exhaust center
5	3 position pressure center

Indicate in the station table below.

Pilot type

Nil	Internal pilot
R	External pilot (type 5□40 only, for type 42P base)

When using an external pilot valve, enter a "○" in the appropriate box for "External Pilot Specification".

Ⓐ Rated voltage

5	24VDC
6	12VDC

Ⓑ Rated voltage

1	100VAC
3	110VAC [115VAC]

Ⓓ Manual override

Nil	Non-locking push type
D	Push-turn locking slotted type
E	Push-turn locking lever type

Ⓒ Indicator light/Surge voltage suppressor

Z	With indicator light/surge voltage suppressor
U	With indicator light/surge voltage suppressor (non-polar)

Note) Only positive COM specification is available for "Z".

Ⓔ A/B port size

Nil	For type 41P and 42P manifolds	
01	Rc 1/8	For type 20P manifolds
C4	ø4 One-touch fitting	
C6	ø6 One-touch fitting	
C8	ø8 One-touch fitting	
Note)	Mixed mounting	

Note) For the type 20 mixed mounting sepcification, it is not necessary to indicate a symbol in the Ⓔ box. Instead, specify a symbol (01, C4, etc.) in place of a "○" in the station table below.

③ Stations

Indicate the type of actuation and layout of valves with a "○". However, for an interface regulator with gauge, indicate with a "G" instead of "○".

	Stations	12	11	10	9	8	7	6	5	4	3	2	1	Quantity
2 position	Single solenoid													
	Double solenoid													
3 position	Closed center													
	Exhaust center													
	Pressure center													
3 port valve	N.C. single													
	N.C. double													
	N.O. single													
	N.O. double													
External pilot specification (Enter only for external pilot)														
Options	Blanking plate assembly													
	Individual SUP spacer assembly													
	Individual EXH spacer assembly													
	Interface regulator (P regulated)													
	Interface regulator (A1 regulated)													
	Interface regulator (B1 regulated)													

Notes: • Blanking plate assembly: SY5000-26-19A (Type 20P), SY5000-26-19A (Type 41P, 42P)
• Individual EXH spacer assembly: SY5000-39-1A (Type 20P), SY5000-39-2A (Type 41P, 42P)
• Individual SUP spacer assembly: SY5000-38-1A (Type 20P), SY5000-38-2A (Type 41P, 42P)
• Interface regulator: ARBY5000-□-□-2 (Type 41, 42)

For SMC use only

Indicate connector assemblies with a "○" in accordance with the valve specifications.

Stations	12	11	10	9	8	7	6	5	4	3	2	1	Quantity	For DC	For 100VAC	For 110VAC
Connector assembly (for 2 position single)														SY5000-37-3A	SY5000-37-15A	SY5000-37-19A
Connector assembly (for 2 position double, 3 position)														SY5000-37-4A	SY5000-37-16A	SY5000-37-20A
Connector assembly (for 2 position single, with spacer assembly)														SY5000-37-5A	SY5000-37-17A	SY5000-37-21A
Connector assembly (for 2 position double, 3 position, with spacer assembly)														SY5000-37-6A	SY3000-37-18A	SY5000-37-22A

Enter ordered part numbers.

	Part no.	Qty.

	Part no.	Qty.

Order no.	
Clerk (code no.)	
Dept. code	

• Refer to pages 157 and 158 for 3 port valve part numbers.
• Refer to page 238 for interface regulator part numbers.

Copy this page for use as needed.

Date: / /

SY7000: Flat Ribbon Cable

Manifold Specification Sheet

Customer name	
Contact person	
Specification sheet no.	
Purchase order no.	
Equipment name	
Quantity	set(s) Required date

Follow procedures ① through ③.

❶ Manifold Type

Enter a "○" for the manifold type to be used and enter requirements in the available boxes for that manifold.

Enter "○".

Top ported (type 20P) **SS5Y7 − 20P −** ☐

Side ported (type 42P) **SS5Y7 − 42P −** ☐ − ☐

A/B port size

02	Rc 1/4
C10	ø10 One-touch fitting

Stations

03	3 stations
⋮	⋮
12	12 stations

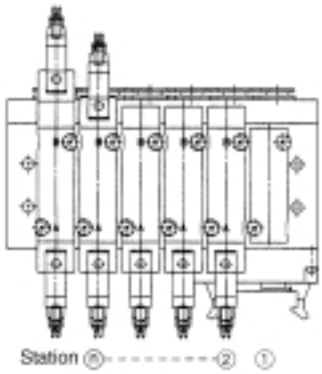

Note) SY5□20-□LO$^{U}_{Z}$□-□ is for type 20P manifolds.
SY5□40-□LO$^{U}_{Z}$□ is for type 42P manifolds.

❷ Valve Type

Enter the symbols for required specifications as indicated below.

For DC: **SY7 ∗ $^{2}_{4}$ 0 ∗ − Ⓐ LO Ⓒ − Ⓓ − Ⓔ**

For AC: **SY7 ∗ $^{2}_{4}$ 0 ∗ − Ⓑ LOZ Ⓒ − Ⓓ − Ⓔ**

Type of actuation

1	2 position single solenoid
2	2 position double solenoid
3	3 position closed center
4	3 position exhaust center
5	3 position pressure center

Indicate in the station table below.

Pilot type

Nil	Internal pilot
R	External pilot (type 7□40 only, for type 42P base)

When using an external pilot valve, enter a "○" in the appropriate box for "External Pilot Specification".

Ⓐ Rated voltage

5	24VDC
6	12VDC

Ⓑ Rated voltage

1	100VAC
3	110VAC [115VAC]

Ⓒ Indicator light/Surge voltage suppressor

Z	With indicator light/surge voltage suppressor
U	With indicator light/surge voltage suppressor (non-polar)

Note) Only positive COM specification is available for "Z".

Ⓓ Manual override

Nil	Non-locking push type
D	Push-turn locking slotted type
E	Push-turn locking lever type

Ⓔ A/B port size

Nil	For type 42P manifolds	
02	Rc 1/4	For type 20P manifolds
C8	ø8 One-touch fitting	
C10	ø10 One-touch fitting	
Note)	Mixed mounting	

Note) For the type 20 mixed mounting sepcification, it is not necessary to indicate a symbol in the Ⓔ box. Instead, specify a symbol (02, C8, etc.) in place of a "○" in the station table below.

❸ Stations

Indicate the type of actuation and layout of valves with a "○".

	Stations	12	11	10	9	8	7	6	5	4	3	2	1	Quantity
2 position	Single solenoid													
	Double solenoid													
3 position	Closed center													
	Exhaust center													
	Pressure center													
External pilot specification (Enter only for external pilot)														
Options	Blanking plate assembly													
	Individual SUP spacer assembly													
	Individual EXH spacer assembly													

Notes:
- Blanking plate assembly: SY7000-26-21A (Type 20P), SY7000-26-21A (Type 42P)
- Individual SUP spacer assembly: SY7000-38-1A (Type 20P), SY7000-38-2A (Type 42P)
- Individual EXH spacer assembly: SY7000-39-1A (Type 20P), Y7000-39-2A (Type 42P)

For SMC use only

Indicate connector assemblies with a "○" in accordance with the valve specifications.

Stations	12	11	10	9	8	7	6	5	4	3	2	1	Quantity	For DC	For 100VAC	For 110VAC
Connector assembly (for 2 position single)														SY5000-37-3A	SY5000-37-15A	SY5000-37-19A
Connector assembly (for 2 position double, 3 position)														SY5000-37-4A	SY5000-37-16A	SY5000-37-20A
Connector assembly (for 2 position single, with spacer assembly)														SY5000-37-5A	SY5000-37-17A	SY5000-37-21A
Connector assembly (for 2 position double, 3 position, with spacer assembly)														SY5000-37-6A	SY5000-37-18A	SY5000-37-22A

Enter ordered part numbers.

	Part no.	Qty.

	Part no.	Qty.

Order no.	
Clerk (code no.)	
Dept. code	

Copy this page for use as needed.

Date: / /

SY9000: Flat Ribbon Cable

Body Ported

Manifold Specification Sheet

Customer name	
Contact person	
Specification sheet no.	
Purchase order no.	
Equipment name	
Quantity	set(s) Required date

Follow procedures ① through ③.

❶ Manifold Type

Enter the symbols for required specifications in the boxes below.

SS5Y9 − 23P − □ − □

Stations

Symbol	Stations
04	4 stations
⋮	⋮
12	12 stations

∗ Includes the number of blanking plate assemblies.

Option

Symbol	Mounting type
Nil	Direct mount
D	DIN rail mount (with DIN rail)
DO	DIN rail mount (without DIN rail)
D∗	When a DIN rail longer than the specified stations is necessary, indicate the number of required stations in the area shown by an asterisk (∗).

(Maximum number of valves: 12 stations)

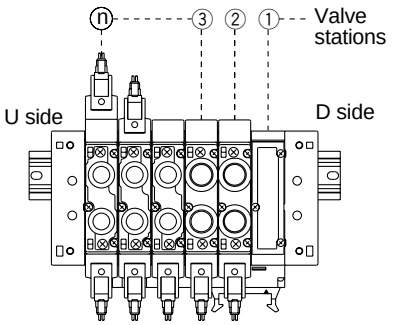

❷ Valve Type

Enter the symbols for required specifications as indicated below.

For DC: SY9 ∗ 20 ∗ − Ⓐ LO Ⓒ □ − □

For AC: SY9 ∗ 20 ∗ − Ⓑ LOZ □ − □

Ⓓ Ⓔ

Type of actuation

1	2 position single solenoid
2	2 position double solenoid
3	3 position closed center
4	3 position exhaust center
5	3 position pressure center

Indicate in the station table below.

Pilot type

Nil	Internal pilot
R	External pilot

When using an external pilot valve, enter a "○" in the ⓑ section of the station table below.

Ⓐ Rated voltage

5	24VDC
6	12VDC

Ⓑ Rated voltage

1	100VAC
3	110VAC [115VAC]

Ⓒ Indicator light/Surge voltage suppressor

Z	With indicator light/surge voltage suppressor
U	With indicator light/surge voltage suppressor (non-polar)

Note) Only positive COM specification is available for "Z".

Ⓓ Manual override

Nil	Non-locking push type
D	Push-turn locking slotted type
E	Push-turn locking lever type

Ⓔ A/B port size

02	Rc 1/4
03	Rc 3/8
C8	ø8 One-touch fitting
C10	ø10 One-touch fitting
C12	ø12 One-touch fitting
Note)	Mixed mounting

Note) For the mixed mounting sepcification, it is not necessary to indicate a symbol in the Ⓔ box. Instead, specify a symbol (02, C10, etc.) in place of a "○" in the station table below.

❸ Stations

Indicate the type of actuation and layout of valves with a "○".
[When A/B port sizes are mixed, indicate symbols (C8, C10, etc.) in the ⓐ section.]

			Stations 12	11	10	9	8	7	6	5	4	3	2	1	Quantity
ⓐ	2 position	Single solenoid													
		Double solenoid													
	3 position	Closed center													
		Exhaust center													
		Pressure center													
	Blanking plate assembly														
ⓑ	External pilot specification (Enter only for external pilot)														
ⓒ	SUP block disc														
	EXH block disc (2 pcs./location)														
ⓓ	Options	Individual SUP spacer assembly													
		Individual EXH spacer assembly													

Notes:
- Blanking plate assembly: SY9000-26-3A
- SUP block disc: SY9000-61-2A
- EXH block disc: SY9000-61-2A (2 pcs./location)
- Individual SUP spacer assembly: SY9000-38-1A
- Individual EXH spacer assembly: SY9000-39-1A

For SMC use only

Indicate connector assemblies with a "○" in accordance with the valve specifications.

Stations	12	11	10	9	8	7	6	5	4	3	2	1	Quantity	For DC	For 100VAC	For 110VAC
Connector assembly (for 2 position single)														SY9000-37-1A	SY9000-37-1B	SY9000-37-1C
Connector assembly (for 2 position double, 3 position)														SY9000-37-2A	SY9000-37-2B	SY9000-37-2C
Connector assembly (for 2 position single, with spacer assembly)														SY9000-37-3A	SY9000-37-3B	SY9000-37-3C
Connector assembly (for 2 position double, 3 position, with spacer assembly)														SY9000-37-4A	SY9000-37-4B	SY9000-37-4C

Enter ordered part numbers.

	Part no.	Qty.

	Part no.	Qty.

Order no.	
Clerk (code no.)	
Dept. code	

Copy this page for use as needed.

Date: / /

SY9000: Flat Ribbon Cable

Base Mounted

Manifold Specification Sheet

Customer name	
Contact person	
Specification sheet no.	
Purchase order no.	
Equipment name	
Quantity	set(s) Required date

Follow procedures ① through ③.

① Manifold Type

Enter the symbols for required specifications in the boxes below.

SS5Y9 − 43P − □ □ □ − □ − □

Stations

Symbol	Stations
04	4 stations
⋮	⋮
12	12 stations

∗ Includes the number of blanking plate assemblies.

P/R port outlet position

Symbol	Outlet position	Applicable stations
U	U side	4 to 10 stations
D	D side	
B	Both sides	4 to 12 stations

Note) When using SUP and EXH block discs, specify "B" for the SUP/EXH block assembly mounting position.

SUP/EXH block assembly specification

Symbol	Specification
Nil	Standard/Internal pilot
R	External pilot
S	Internal pilot/Built-in silencer
RS	External pilot/Built-in silencer

Option

Symbol	Mounting type
Nil	Direct mount
D	DIN rail mount (with DIN rail)
DO	DIN rail mount (without DIN rail)
D∗	When a DIN rail longer than the specified stations is necessary, indicate the number of required stations in the area shown by an asterisk (∗).

A/B port size

Symbol	Specification
C8	ø8 One-touch fitting
C10	ø10 One-touch fitting
C12	ø12 One-touch fitting
Note)	Mixed mounting

Note) For mixed mounting, indicate symbols (C8, C10, etc.) in the ⓐ section of the station table.

(Maximum number of valves: 12 stations)

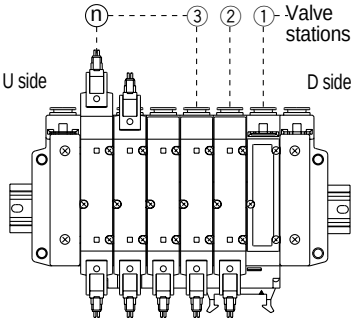

② Valve Type

Enter the symbols for required specifications as indicated below.

For DC: SY9 ∗ 40 ∗ − Ⓐ □ LO Ⓒ □

For AC: SY9 ∗ 40 ∗ − Ⓑ □ LOZ Ⓓ □

Type of actuation

1	2 position single solenoid
2	2 position double solenoid
3	3 position closed center
4	3 position exhaust center
5	3 position pressure center

Indicate in the station table below.

Pilot type

Nil	Internal pilot
R	External pilot

When using an external pilot valve, enter a "○" in the ⓑ section of the station table below.

Ⓐ Rated voltage

5	24VDC
6	12VDC

Ⓑ Rated voltage

1	100VAC
3	110VAC [115VAC]

Ⓒ Indicator light/Surge voltage suppressor

Z	With indicator light/surge voltage suppressor
U	With indicator light/surge voltage suppressor (non-polar)

Note) Only positive COM specification is available for "Z".

Ⓓ Manual override

Nil	Non-locking push type
D	Push-turn locking slotted type
E	Push-turn locking lever type

③ Stations

Indicate the type of actuation and layout of valves with a "○".
[When A/B port sizes are mixed, indicate symbols (C8, C10, etc.) in the ⓐ section.]

		Stations	12	11	10	9	8	7	6	5	4	3	2	1	Quantity
ⓐ	2 position	Single solenoid													
		Double solenoid													
	3 position	Closed center													
		Exhaust center													
		Pressure center													
	Blanking plate assembly														
ⓑ	External pilot specification (Enter only for external pilot)														
ⓒ	SUP block disc														
	EXH block disc (2 pcs./location)														
ⓓ	Options	Individual SUP spacer assembly													
		Individual EXH spacer assembly													

Notes:
- Blanking plate assembly: SY9000-26-4A
- SUP block disc: SY9000-57-2A
- EXH block disc: SY9000-57-2A (2 pcs./location)
- Individual SUP spacer assembly: SY9000-38-2A
- Individual EXH spacer assembly: SY9000-39-2A

For SMC use only

Indicate connector assemblies with a "○" in accordance with the valve specifications.

Stations	12	11	10	9	8	7	6	5	4	3	2	1	Quantity	For DC	For 100VAC	For 110VAC
Connector assembly (for 2 position single)														SY9000-37-1A	SY9000-37-1B	SY9000-37-1C
Connector assembly (for 2 position double, 3 position)														SY9000-37-2A	SY9000-37-2B	SY9000-37-2C
Connector assembly (for 2 position single, with spacer assembly)														SY9000-37-3A	SY9000-37-3B	SY9000-37-3C
Connector assembly (for 2 position double, 3 position, with spacer assembly)														SY9000-37-4A	SY9000-37-4B	SY9000-37-4C
Lead wire cover (for 2 position double, 3 position)														SY9000-41-1		

Enter ordered part numbers.

	Part no.	Qty.

	Part no.	Qty.

Order no.	
Clerk (code no.)	
Dept. code	

Copy this page for use as needed.

Date: / /

SY3000: Non-plug-in

DIN Rail Manifold

Manifold Specification Sheet

Customer name	
Contact person	
Specification sheet no.	
Purchase order no.	
Equipment name	
Quantity	set(s) Required date

Follow procedures ① through ③.

❶ Manifold Type

Enter the symbols for required specifications in the boxes below.

SS5Y3 − 45P − □ □ □ □ □

Stations

Symbol	Stations
02	2 stations
⋮	⋮
20	20 stations

∗ Includes the number of blanking plate assemblies.

SUP/EXH block assembly mounting position

Symbol	Mounting position	Applicable stations
U	U side	2 to 10 stations
D	D side	
B	Both sides	2 to 20 stations
M	Special specifications	

∗ For special specifications, indicate in the station table below.

SUP/EXH block assembly specification

Symbol	Specification
Nil	Standard/Internal pilot
R∗	External pilot
S∗	Internal pilot/Built-in silencer
RS∗	External pilot/Built-in silencer

Note) An asterisk (∗) indicates order made products.

A/B port size

Symbol	Specification
C4	ø4 One-touch fitting
C6	ø6 One-touch fitting
M	Mixed

Note) For mixed mounting, indicate C4 or C6 instead of "○" in the station table.

Option

When a DIN rail longer than the specified stations is necessary, indicate the number of required stations. (Max. 20 stations)

(Maximum number of valves: 20 stations)

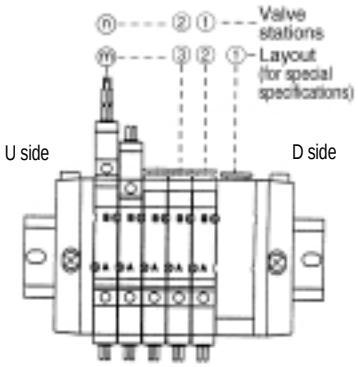

❷ Valve Type

Enter the symbols for required specifications as indicated below.

SY3 ∗ 40 ∗ − □ □ □ □

Ⓐ Ⓑ Ⓒ Ⓓ

Type of actuation

1	2 position single solenoid
2	2 position double solenoid
3	3 position closed center
4	3 position exhaust center
5	3 position pressure center

Indicate in the station table below.

Pilot type

Nil	Internal pilot
R	External pilot

When using an external pilot valve, enter a "○" in the appropriate box for "External Pilot Specification".

Ⓐ Rated voltage

DC specifications

5	24VDC
6	12VDC
V	6VDC
S	5VDC
R	3VDC

AC specifications (50/60Hz)

1	100VAC
2	200VAC
3	110VAC [115VAC]
4	220VAC [230VAC]

Ⓑ Electrical entry

G	Grommet (lead wire length 300mm)	
H	Grommet (lead wire length 600mm)	
L	L type plug connector	With lead wire
LN		Without lead wire
LO		Without connector
M	M type plug connector	With lead wire
MN		Without lead wire
MO		Without connector

Ⓒ Indicator light/ Surge voltage suppressor

Nil	Without indicator light/ surge voltage suppressor
S	With surge voltage suppressor
Z	With indicator light/ surge voltage suppressor
R	With surge voltage suppressor (non-polar)
U	With indicator light/ surge voltage suppressor (non-polar)

Note 1) For AC, there is no "S" specification, since it is integrated with the rectifier.

Note 2) "R" and "U" are available for 24VDC only.

Ⓓ Manual override

Nil	Non-locking push type
D	Push-turn locking slotted type
E	Push-turn locking lever type

❸ Stations

Indicate the layout of valves, etc., with a "○". However, for an interface regulator with gauge, indicate with a "G" instead of "○".

Stations or layout																															Quantity
							20	19	18	17	16	15	14	13	12	11	10	9	8	7	6	5	4	3	2	1					
ⓐ	2 position	Single solenoid																													
		Double solenoid																													
	3 position	Closed center																													
		Exhaust center																													
		Pressure center																													
	3 port valves	N.C. single																													
		N.C. double																													
		N.O. single																													
		N.O. double																													
	Blanking plate assembly																														
	External pilot specification (Enter only for external pilot)																														
ⓑ	Special specifications	SUP/EXH block assembly																													
ⓒ	SUP block disc																														
	EXH block disc (2 pcs./location)																														
ⓓ	Options	Individual SUP spacer assembly																													
		Individual EXH spacer assembly																													
		Interface regulator (P regulated)																													
		Interface regulator (A1 regulated)																													
		Interface regulator (B1 regulated)																													

Notes:
- Blanking plate assembly: SX3000-75-1A
- SUP block disc: SX3000-77-1A
- EXH block disc: SX3000-77-1A (2 pcs./location)
- Individual SUP spacer assembly: SY3000-38-2A
- Individual EXH spacer assembly: SY3000-39-2A
- Interface regulator: ARBY3000-□-□-2
- SUP/EXH block assembly (standard): SX3000-51-1A
- SUP/EXH block assembly (R type): SX3000-51-3A
- SUP/EXH block assembly (S type): SX3000-51-4A
- SUP/EXH block assembly (RS type): SX3000-51-5A

For SMC use only

Enter ordered part numbers.

	Part no.	Qty.

	Part no.	Qty.

Order no.	
Clerk (code no.)	
Dept. code	

Note 1) For special specifications of the SUP/EXH block assembly mounting position, list its part number and quantity with the manifold type.

Note 2) Refer to pages 157 and 158 for 3 port valve part numbers.

Note 3) Refer to page 238 for interface regulator part numbers. Also, for interface regulators with gauge, the part numbers for odd number and even number stations are different.

SMC

Copy this page for use as needed.

Date: / /

SY5000: Non-plug-in

DIN Rail Manifold

Manifold Specification Sheet

Customer name			
Contact person			
Specification sheet no.			
Purchase order no.			
Equipment name			
Quantity	set(s)	Required date	

Follow procedures ① through ③.

❶ Manifold Type

Enter the symbols for required specifications in the boxes below.

SS5Y5 − 45 − □ □ □ − □ □

Stations

Symbol	Stations
02	2 stations
⋮	⋮
20	20 stations

∗ Includes the number of blanking plate assemblies.

SUP/EXH block assembly mounting position

Symbol	Mounting position	Applicable stations
U	U side	2 to 10 stations
D	D side	
B	Both sides	2 to 20 stations
M	Special specifications	

∗ For special specifications, indicate in the station table below.

SUP/EXH block assembly specification

Symbol	Specification
Nil	Standard/Internal pilot
R∗	External pilot
S∗	Internal pilot/Built-in silencer
RS∗	External pilot/Built-in silencer

Note) An asterisk (∗) indicates order made products.

A/B port size

Symbol	Specification
C4	ø4 One-touch fitting
C6	ø6 One-touch fitting
C8	ø8 One-touch fitting
M	Mixed

Note) For mixed mounting, indicate C4, C6 or C8 instead of "○" in the station table.

Option

When a DIN rail longer than the specified stations is necessary, indicate the number of required stations. (Max. 20 stations)

(Maximum number of valves: 20 stations)

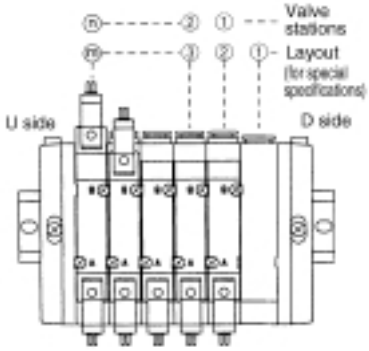

❷ Valve Type

Enter the symbols for required specifications as indicated below.

SY5 ∗ 40 ∗ − □ □ □ □

Ⓐ Ⓑ Ⓒ Ⓓ

Type of actuation

1	2 position single solenoid
2	2 position double solenoid
3	3 position closed center
4	3 position exhaust center
5	3 position pressure center

Indicate in the station table below.

Pilot type

Nil	Internal pilot
R	External pilot

When using an external pilot valve, enter a "○" in the appropriate box for "External Pilot Specification".

Ⓐ Rated voltage

DC specifications

5	24VDC
6	12VDC
V	6VDC
S	5VDC
R	3VDC

AC specifications (50/60Hz)

1	100VAC
2	200VAC
3	110VAC [115VAC]
4	220VAC [230VAC]

Note) DC specification of "D", "DO", "Y", and "YO" types are only available in 24VDC and 12VDC.

Ⓑ Electrical entry

G	Grommet (lead wire length 300mm)	
H	Grommet (lead wire length 600mm)	
L	L type plug connector	With lead wire
LN		Without lead wire
LO		Without connector
M	M type plug connector	With lead wire
MN		Without lead wire
MO		Without connector
D	DIN terminal	With connector
DO		Without connector
Y∗	DIN terminal	With connector
YO∗		Without connector

∗ Refer to page 189.

Ⓒ Indicator light/ Surge voltage suppressor

Nil	Without indicator light/ surge voltage suppressor
S	With surge voltage suppressor
Z	With indicator light/ surge voltage suppressor
R	With surge voltage suppressor (non-polar)
U	With indicator light/ surge voltage suppressor (non-polar)

Note 1) For AC, there is no "S" specification, since it is integrated with the rectifier.

Note 2) "DOZ" is not available.

Note 3) "R" and "U" are available for 24VDC only.

Note 4) Since "D", "DO", "Y", and "YO" are non-polar types, "R" and "U" are not available.

Ⓓ Manual override

Nil	Non-locking push type
D	Push-turn locking slotted type
E	Push-turn locking lever type

❸ Stations

Indicate the layout of valves, etc., with a "○". However, for an interface regulator with gauge, indicate with a "G" instead of "○".

Stations or layout							20	19	18	17	16	15	14	13	12	11	10	9	8	7	6	5	4	3	2	1	Quantity
ⓐ	2 position	Single solenoid																									
		Double solenoid																									
	3 position	Closed center																									
		Exhaust center																									
		Pressure center																									
	3 port valves	N.C. single																									
		N.C. double																									
		N.O. single																									
		N.O. double																									
	Blanking plate assembly																										
	External pilot specification (Enter only for external pilot)																										
ⓑ	Special specifications	SUP/EXH block assembly																									
ⓒ	SUP block disc																										
	EXH block disc (2 pcs./location)																										
ⓓ	Options	Individual SUP spacer assembly																									
		Individual EXH spacer assembly																									
		Interface regulator (P regulated)																									
		Interface regulator (A1 regulated)																									
		Interface regulator (B1 regulated)																									

Notes:
- Blanking plate assembly: SX5000-76-1A
- SUP block disc: SX5000-77-1A
- EXH block disc: SX5000-77-1A (2 pcs./location)
- Individual SUP spacer assembly: SY5000-38-2A
- Individual EXH spacer assembly: SY5000-39-2A
- Interface regulator: ARBY5000-□-□-2
- SUP/EXH block assembly (standard): SX5000-51-1A
- SUP/EXH block assembly (R type): SX5000-51-3A
- SUP/EXH block assembly (S type): SX5000-51-4A
- SUP/EXH block assembly (RS type): SX5000-51-5A

For SMC use only

Enter ordered part numbers.

	Part no.	Qty.

	Part no.	Qty.

Order no.	
Clerk (code no.)	
Dept. code	

Note 1) For special specifications of the SUP/EXH block assembly mounting position, list its part number and quantity with the manifold type.

Note 2) Refer to pages 157 and 158 for 3 port valve part numbers.

Note 3) Refer to page 238 for interface regulator part numbers.

Copy this page for use as needed.

Date: / /

SY3000: With Connector Box

Non-plug-in, DIN Rail Manifold

Manifold Specification Sheet

Customer name	
Contact person	
Specification sheet no.	
Purchase order no.	
Equipment name	
Quantity	set(s) Required date

Follow procedures ① through ③.

❶ Manifold Type

Enter the symbols for required specifications in the boxes below.

SS5Y3-45 — □ □ — □ □ □ — □ — □

Specification

Symbol	Specification
A	With connector box (positive COM)
NA	With connector box (negative COM)

∗ The type of lead wire assemblies included is different.

Connector box mounting position

Symbol	Mounting position
U	U side
D	D side

Stations

Symbol	Stations	Note
02	2 stations	Up to 16 solenoids applicable
⋮	⋮	
16	16 stations	

∗ Includes the number of blanking plate assemblies.

SUP/EXH block assembly mounting position

Symbol	Mounting position	Applicable stations
U	U side	2 to 10 stations
D	D side	
B	Both sides	2 to 16 stations
M	Special specifications	

∗ For special specifications, indicate in the station table below.

SUP/EXH block assembly specification

Symbol	Specification
Nil	Standard/Internal pilot
R∗	External pilot
S∗	Internal pilot/Built-in silencer
RS∗	External pilot/Built-in silencer

Note) An asterisk (∗) indicates order made products.

Option

When a DIN rail longer than the specified stations is necessary, indicate the number of required stations. (Max. 20 stations)

A/B port size

Symbol	Specification
C4	ø4 One-touch fitting
C6	ø6 One-touch fitting
M	Mixed

Note) For mixed mounting, indicate C4 or C6 instead of "○" in the station table.

❷ Valve Type

Enter the symbols for required specifications as indicated below.

SY3∗40∗—5LOU □ Ⓐ

Type of actuation

1	2 position single solenoid
2	2 position double solenoid
3	3 position closed center
4	3 position exhaust center
5	3 position pressure center

Indicate in the station table below.

Pilot type

Nil	Internal pilot
R	External pilot

When using an external pilot valve, enter a "○" in the appropriate box for "External Pilot Specification".

L type connector

Rated voltage

24VDC

Ⓐ Manual override

Nil	Non-locking push type
D	Push-turn locking slotted type
E	Push-turn locking lever type

(Maximum number of valves: 16 stations
However, up to 16 solenoids are applicable.)

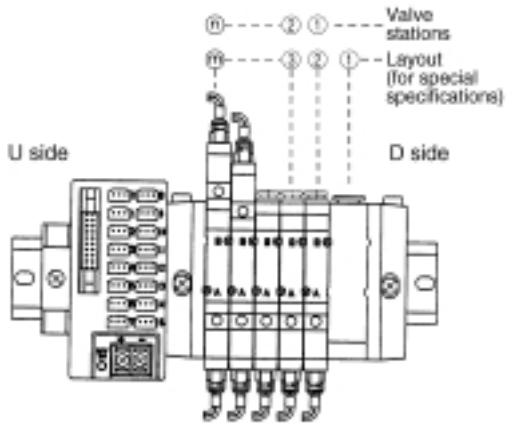

❸ Stations

Indicate the layout of valves, etc., with a "○". However, for an interface regulator with gauge, indicate with a "G" instead of "○".

Stations or layout																													Quantity
							20	19	18	17	16	15	14	13	12	11	10	9	8	7	6	5	4	3	2	1			
ⓐ	2 position	Single solenoid																											
		Double solenoid																											
	3 position	Closed center																											
		Exhaust center																											
		Pressure center																											
	3 port valves	N.C. single																											
		N.C. double																											
		N.O. single																											
		N.O. double																											
	Blanking plate assembly																												
	External pilot specification (Enter only for external pilot)																												
ⓑ	Special specifications	SUP/EXH block assembly																											
ⓒ	SUP block disc																												
	EXH block disc (2 pcs./location)																												
ⓓ	Options	Individual SUP spacer assembly																											
		Individual EXH spacer assembly																											
		Interface regulator (P regulated)																											
		Interface regulator (A1 regulated)																											
		Interface regulator (B1 regulated)																											

Note) The lead wire assembly for use between the valves and connector box is included with the manifold, therefore its specification is not necessary.

Notes:
- Blanking plate assembly: SX3000-75-1A
- SUP block disc: SX3000-77-1A
- EXH block disc: SX3000-77-1A (2 pcs./location)
- Individual SUP spacer assembly: SY3000-38-2A
- Individual EXH spacer assembly: SY3000-39-2A
- Interface regulator: ARBY3000-□-□-2
- SUP/EXH block assembly (standard): SX3000-51-1A
- SUP/EXH block assembly (R type): SX3000-51-3A
- SUP/EXH block assembly (S type): SX3000-51-4A
- SUP/EXH block assembly (RS type): SX3000-51-5A

For SMC use only

Enter ordered part numbers.

	Part no.	Qty.

	Part no.	Qty.

Order no.	
Clerk (code no.)	
Dept. code	

Note 1) For special specifications of the SUP/EXH block assembly mounting position, list its part number and quantity with the manifold type.
Note 2) Refer to pages 157 and 158 for 3 port valve part numbers.
Note 3) Refer to page 238 for interface regulator part numbers. Also, for interface regulators with gauge, the part numbers for odd number and even number stations are different.

SMC

Copy this page for use as needed.

Date: / /

SY5000: With Connector Box

Non-plug-in, DIN Rail Manifold

Manifold Specification Sheet

Customer name			
Contact person			
Specification sheet no.			
Purchase order no.			
Equipment name			
Quantity	set(s)	Required date	

Follow procedures ① through ③.

❶ Manifold Type

Enter the symbols for required specifications in the boxes below.

SS5Y5-45 — □ □ — □ □ □ — □ — □

Specification

Symbol	Specification
A	With connector box (positive COM)
NA	With connector box (negative COM)

∗ The type of lead wire assemblies included is different.

Connector box mounting position

Symbol	Mounting position
U	U side
D	D side

Stations

Symbol	Stations	Note
02	2 stations	Up to 16 solenoids applicable
⋮	⋮	
16	16 stations	

∗ Includes the number of blanking plate assemblies.

SUP/EXH block assembly mounting position

Symbol	Mounting position	Applicable stations
U	U side	2 to 10 stations
D	D side	
B	Both sides	2 to 20 stations
M	Special specifications	

∗ For special specifications, indicate in the station table below.

SUP/EXH block assembly specification

Symbol	Specification
Nil	Standard/Internal pilot
R∗	External pilot
S∗	Internal pilot/Built-in silencer
RS∗	External pilot/Built-in silencer

Note) An asterisk (∗) indicates order made products.

Option

When a DIN rail longer than the specified stations is necessary, indicate the number of required stations. (Max. 20 stations)

A/B port size

Symbol	Specification
C4	ø4 One-touch fitting
C6	ø6 One-touch fitting
C8	ø8 One-touch fitting
M	Mixed

Note) For mixed mounting, indicate C4, C6 or C8 instead of "○" in the station table.

❷ Valve Type

Enter the symbols for required specifications as indicated below.

SY5 ∗ 40 ∗ — 5 LO U □ Ⓐ

Type of actuation

1	2 position single solenoid
2	2 position double solenoid
3	3 position closed center
4	3 position exhaust center
5	3 position pressure center

Indicate in the station table below.

Pilot type

Nil	Internal pilot
R	External pilot

When using an external pilot valve, enter a "○" in the appropriate box for "External Pilot Specification".

L type connector

Rated voltage

24VDC

Ⓐ Manual override

Nil	Non-locking push type
D	Push-turn locking slotted type
E	Push-turn locking lever type

(Maximum number of valves: 16 stations
However, up to 16 solenoids are applicable.)

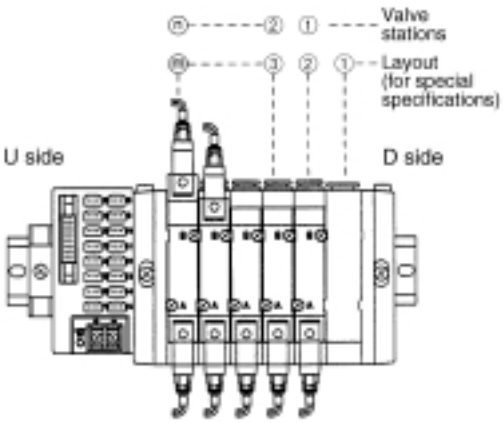

❸ Stations

Indicate the layout of valves, etc., with a "○". However, for an interface regulator with gauge, indicate with a "G" instead of "○".

Stations or layout																														Quantity
							20	19	18	17	16	15	14	13	12	11	10	9	8	7	6	5	4	3	2	1				
ⓐ	2 position	Single solenoid																												
		Double solenoid																												
	3 position	Closed center																												
		Exhaust center																												
		Pressure center																												
	3 port valves	N.C. single																												
		N.C. double																												
		N.O. single																												
		N.O. double																												
	Blanking plate assembly																													
	External pilot specification (Enter only for external pilot)																													
ⓑ	Special specifications	SUP/EXH block assembly																												
ⓒ	SUP block disc																													
	EXH block disc (2 pcs./location)																													
ⓓ	Options	Individual SUP spacer assembly																												
		Individual EXH spacer assembly																												
		Interface regulator (P regulated)																												
		Interface regulator (A1 regulated)																												
		Interface regulator (B1 regulated)																												

Note) The lead wire assembly for use between the valves and connector box is included with the manifold, therefore its specification is not necessary.

Notes:
- Blanking plate assembly: SX5000-76-1A
- SUP block disc: SX5000-77-1A
- EXH block disc: SX5000-77-1A (2 pcs./location)
- Individual SUP spacer assembly: SY5000-38-2A
- Individual EXH spacer assembly: SY5000-39-2A
- Interface regulator: ARBY5000-□-□-2
- SUP/EXH block assembly (standard): SX5000-51-1A
- SUP/EXH block assembly (R type): SX5000-51-3A
- SUP/EXH block assembly (S type): SX5000-51-4A
- SUP/EXH block assembly (RS type): SX5000-51-5A

Enter ordered part numbers.

	Part no.	Qty.

For SMC use only

	Part no.	Qty.

Order no.	
Clerk (code no.)	
Dept. code	

Note 1) For special specifications of the SUP/EXH block assembly mounting position, list its part number and quantity with the manifold type.

Note 2) Refer to pages 157 and 158 for 3 port valve part numbers.

Note 3) Refer to page 238 for interface regulator part numbers.

Copy this page for use as needed.

Date: / /

SY3000: D-sub Connector

Plug-in, DIN Rail Manifold

Manifold Specification Sheet

Customer name	
Contact person	
Specification sheet no.	
Purchase order no.	
Equipment name	
Quantity	set(s) Required date

Follow procedures ① through ③.

❶ Manifold Type

Enter the symbols for required specifications in the boxes below.

SS5Y3-45 □ F □ — □ □ □ — □ — □ — □

Common specification

Nil	Positive COM
N	Negative COM

Connector mounting position

Symbol	Mounting position
U	U side
D	D side

Stations

Symbol	Stations	Note
02	2 stations	Single wiring specification (Up to 20 solenoids applicable)
⋮	⋮	
20	20 stations	

Note 1) Includes the number of blanking plate assemblies.
Note 2) Two stations are required for valves other than single solenoid, because they are dual body type.

SUP/EXH block assembly mounting position

Symbol	Mounting position	Applicable stations
U	U side	2 to 10 stations
D	D side	
B	Both sides	2 to 20 stations
M	Special specifications	

∗For special specifications, indicate in the station table below.

SUP/EXH block assembly specification

Symbol	Specification
Nil	Standard/Internal pilot
R*	External pilot
S*	Internal pilot/Built-in silencer
RS*	External pilot/Built-in silencer

Note) An asterisk (∗) indicates order made products.

Voltage specification

Nil	24VDC
12V	12VDC

A/B port size

Symbol	Specification
C4	ø4 One-touch fitting
C6	ø6 One-touch fitting
M	Mixed

Note) For mixed mounting, indicate C4 or C6 instead of "○" in the station table.

Option

When a DIN rail longer than the specified stations is necessary, indicate the number of required stations. (Max. 20 stations)

❷ Valve Type

Enter the symbols for required specifications as indicated below.

SY3 ∗∗∗ ∗ — □ F U □

Ⓐ Ⓑ

Type of actuation/Body option

140	2 position single solenoid	Standard
245	2 position double solenoid	Dual body type
345	3 position closed center	
445	3 position exhaust center	
545	3 position pressure center	

Indicate in the station table below.

Pilot type

Nil	Internal pilot
R	External pilot

When using an external pilot valve, enter a "○" in the appropriate box for "External Pilot Specification".

Ⓐ Rated voltage

5	24VDC
6	12VDC

∗ Voltage must correspond with the manifold voltage specification.

Ⓑ Manual override

Nil	Non-locking push type
D	Push-turn locking slotted type
E	Push-turn locking lever type

(Maximum number of valves: 20 stations
However, up to 20 solenoids are applicable.)

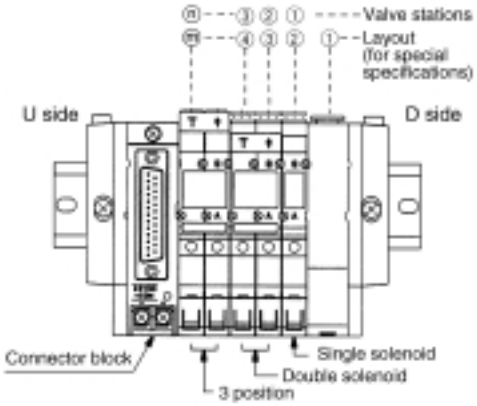

Note) The connector block is not included with the stations or layout.

❸ Stations

- **Enter a "○" for one station for a single solenoid type.**
- **Enter a "○" over two stations for a double solenoid or 3 position type. (See the entry example below.)**

Stations or layout				20	19	18	17	16	15	14	13	12	11	10	9	8	7	6	5	4	3	2	1	Quantity
ⓐ	2 position	Single solenoid	Refer to the entry example.																					
		Double solenoid																						
	3 position	Closed center																						
		Exhaust center																						
		Pressure center																						
	3 port valves	N.C. single																						
		N.C. double																						
		N.O. single																						
		N.O. double																						
	Blanking plate assembly																							
	External pilot specification (Enter only for external pilot)																							
ⓑ	Special specifications	SUP/EXH block assembly																						
ⓒ	SUP block disc																							
	EXH block disc (2 pcs./location)																							

[Entry example]

Stations or layout			6	5	4	3	2	1
ⓐ	2 position	Single solenoid			C4			○
		Double solenoid	C	6		○		

For mixed port sizes

Notes:
- Blanking plate assembly: SX3000-75-2A
- SUP block disc: SX3000-77-1A
- EXH block disc: SX3000-77-1A (2 pcs./location)
- SUP/EXH block assembly (standard): SX3000-51-2A
- SUP/EXH block assembly (R type): SX3000-51-6A
- SUP/EXH block assembly (S type): SX3000-51-7A
- SUP/EXH block assembly (RS type): SX3000-51-8A

For SMC use only

Enter ordered part numbers.

	Part no.	Qty.

	Part no.	Qty.

Order no.	
Clerk (code no.)	
Dept. code	

Note 1) For special specifications of the SUP/EXH block assembly mounting position, list its part number and quantity with the manifold type.
Note 2) Refer to pages 157 and 158 for 3 port valve part numbers.

SMC

Copy this page for use as needed.

Date: / /

SY5000: D-sub Connector

Plug-in, DIN Rail Manifold

Manifold Specification Sheet

Customer name	
Contact person	
Specification sheet no.	
Purchase order no.	
Equipment name	
Quantity	set(s) Required date

Follow procedures ① through ③.

❶ Manifold Type

Enter the symbols for required specifications in the boxes below.

SS5Y5-45 □ F □ — □ □ □ — □ — □ □

Common specification

Nil	Positive COM
N	Negative COM

Connector mounting position

Symbol	Mounting position
U	U side
D	D side

Stations

Symbol	Stations	Note
02	2 stations	Single wiring specification (Up to 20 solenoids applicable)
⋮	⋮	
20	20 stations	

Note 1) Includes the number of blanking plate assemblies.
Note 2) Two stations are required for valves other than single solenoid, because they are dual body type.

SUP/EXH block assembly mounting position

Symbol	Mounting position	Applicable stations
U	U side	2 to 10 stations
D	D side	
B	Both sides	2 to 20 stations
M	Special specifications	

∗For special specifications, indicate in the station table below.

SUP/EXH block assembly specification

Symbol	Specification
Nil	Standard/Internal pilot
R∗	External pilot
S∗	Internal pilot/Built-in silencer
RS∗	External pilot/Built-in silencer

Note) An asterisk (∗) indicates order made products.

Voltage specification

Nil	24VDC
12V	12VDC

A/B port size

Symbol	Specification
C4	ø4 One-touch fitting
C6	ø6 One-touch fitting
C8	ø8 One-touch fitting
M	Mixed

Note) For mixed mounting, indicate C4, C6 or C8 instead of "○" in the station table.

Option

When a DIN rail longer than the specified stations is necessary, indicate the number of required stations. (Max. 20 stations)

❷ Valve Type

Enter the symbols for required specifications as indicated below.

SY5 ∗∗∗ ∗ — □ F U □

Ⓐ Ⓑ

Type of actuation/Body option

140	2 position single solenoid	Standard
245	2 position double solenoid	Dual body type
345	3 position closed center	
445	3 position exhaust center	
545	3 position pressure center	

Indicate in the station table below.

Pilot type

Nil	Internal pilot
R	External pilot

When using an external pilot valve, enter a "○" in the appropriate box for "External Pilot Specification".

Ⓐ Rated voltage

5	24VDC
6	12VDC

∗ Voltage must correspond with the manifold voltage specification.

Ⓑ Manual override

Nil	Non-locking push type
D	Push-turn locking slotted type
E	Push-turn locking lever type

(Maximum number of valves: 20 stations
However, up to 20 solenoids are applicable.)

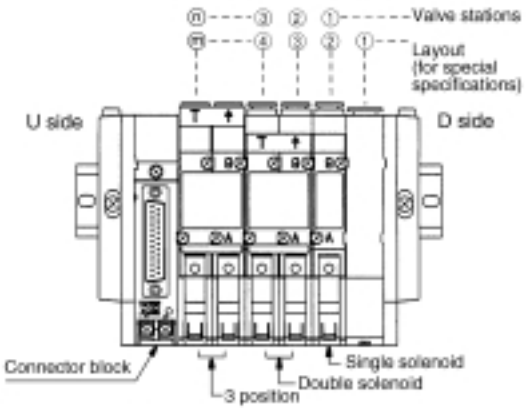

Note) The connector block is not included with the stations or layout.

❸ Stations

- **Enter a "○" for one station for a single solenoid type.**
- **Enter a "○" over two stations for a double solenoid or 3 position type. (See the entry example below.)**

Stations or layout				20	19	18	17	16	15	14	13	12	11	10	9	8	7	6	5	4	3	2	1	Quantity
ⓐ 2 position	Single solenoid																							
	Double solenoid	Refer to the entry example.																						
ⓐ 3 position	Closed center																							
	Exhaust center																							
	Pressure center																							
ⓐ 3 port valves	N.C. single																							
	N.C. double																							
	N.O. single																							
	N.O. double																							
Blanking plate assembly																								
External pilot specification (Enter only for external pilot)																								
ⓑ Special specifications	SUP/EXH block assembly																							
ⓒ SUP block disc																								
ⓒ EXH block disc (2 pcs./location)																								

[Entry example]

Stations or layout			6	5	4	3	2	1
ⓐ 2 position	Single solenoid				C6			○
	Double solenoid		C	8		○		

For mixed port sizes

Notes:
- Blanking plate assembly: SX5000-76-2A
- SUP block disc: SX5000-77-1A
- EXH block disc: SX5000-77-1A (2 pcs./location)
- SUP/EXH block assembly (standard): SX5000-51-2A
- SUP/EXH block assembly (R type): SX5000-51-6A
- SUP/EXH block assembly (S type): SX5000-51-7A
- SUP/EXH block assembly (RS type): SX5000-51-8A

For SMC use only

Enter ordered part numbers.

	Part no.	Qty.

	Part no.	Qty.

Order no.	
Clerk (code no.)	
Dept. code	

Note 1) For special specifications of the SUP/EXH block assembly mounting position, list its part number and quantity with the manifold type.
Note 2) Refer to pages 157 and 158 for 3 port valve part numbers.

Copy this page for use as needed.

Date: / /

SY3000: Flat Ribbon Cable 26 Pins

Plug-in, DIN Rail Manifold

Manifold Specification Sheet

Customer name			
Contact person			
Specification sheet no.			
Purchase order no.			
Equipment name			
Quantity	set(s)	Required date	

Follow procedures ① through ③.

❶ Manifold Type

Enter the symbols for required specifications in the boxes below.

SS5Y3-45 ☐ P ☐ — ☐ ☐ ☐ — ☐ ☐ — ☐

Common specification

Nil	Positive COM
N	Negative COM

Connector mounting position

Symbol	Mounting position
U	U side
D	D side

Stations

Symbol	Stations	Note
02	2 stations	Single wiring specification (Up to 20 solenoids applicable)
⋮	⋮	
20	20 stations	

Note 1) Includes the number of blanking plate assemblies.
Note 2) Two stations are required for valves other than single solenoid, because they are dual body type.

SUP/EXH block assembly mounting position

Symbol	Mounting position	Applicable stations
U	U side	2 to 10 stations
D	D side	
B	Both sides	2 to 20 stations
M	Special specifications	

∗For special specifications, indicate in the station table below.

SUP/EXH block assembly specification

Symbol	Specification
Nil	Standard/Internal pilot
R*	External pilot
S*	Internal pilot/Built-in silencer
RS*	External pilot/Built-in silencer

Note) An asterisk (∗) indicates order made products.

Voltage specification

Nil	24VDC
12V	12VDC

A/B port size

Symbol	Specification
C4	ø4 One-touch fitting
C6	ø6 One-touch fitting
M	Mixed

Note) For mixed mounting, indicate C4 or C6 instead of "○" in the station table.

Option

When a DIN rail longer than the specified stations is necessary, indicate the number of required stations. (Max. 20 stations)

❷ Valve Type

Enter the symbols for required specifications as indicated below.

SY3 ∗∗∗ ∗ — ☐ F U ☐

Ⓐ Ⓑ

Type of actuation/Body option

140	2 position single solenoid	Standard
245	2 position double solenoid	Dual body type
345	3 position closed center	
445	3 position exhaust center	
545	3 position pressure center	

Indicate in the station table below.

Pilot type

Nil	Internal pilot
R	External pilot

When using an external pilot valve, enter a "○" in the appropriate box for "External Pilot Specification".

Ⓐ Rated voltage

5	24VDC
6	12VDC

∗ Voltage must correspond with the manifold voltage specification.

Ⓑ Manual override

Nil	Non-locking push type
D	Push-turn locking slotted type
E	Push-turn locking lever type

(Maximum number of valves: 20 stations
However, up to 20 solenoids are applicable.)

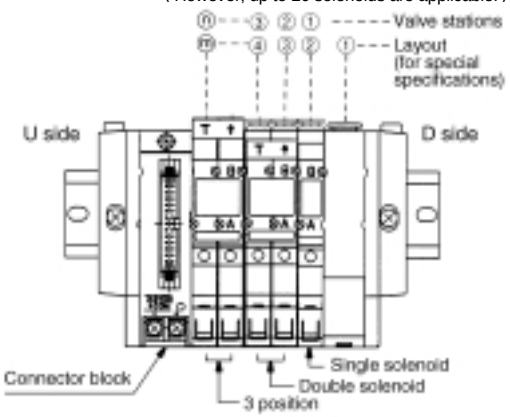

Note) The connector block is not included with the stations or layout.

❸ Stations

- **Enter a "○" for one station for a single solenoid type.**
- **Enter a "○" over two stations for a double solenoid or 3 position type. (See the entry example below.)**

	Stations or layout			20	19	18	17	16	15	14	13	12	11	10	9	8	7	6	5	4	3	2	1	Quantity
ⓐ	2 position	Single solenoid																						
		Double solenoid	Refer to the entry example.																					
	3 position	Closed center																						
		Exhaust center																						
		Pressure center																						
	3 port valves	N.C. single																						
		N.C. double																						
		N.O. single																						
		N.O. double																						
	Blanking plate assembly																							
	External pilot specification (Enter only for external pilot)																							
ⓑ	Special specifications	SUP/EXH block assembly																						
ⓒ	SUP block disc																							
	EXH block disc (2 pcs./location)																							

[Entry example]

	Stations or layout		6	5	4	3	2	1
ⓐ	2 position	Single solenoid			C4			○
		Double solenoid	C	6		○		

For mixed port sizes

Notes:
- Blanking plate assembly: SX3000-75-2A
- SUP block disc: SX3000-77-1A
- EXH block disc: SX3000-77-1A (2 pcs./location)
- SUP/EXH block assembly (standard): SX3000-51-2A
- SUP/EXH block assembly (R type): SX3000-51-6A
- SUP/EXH block assembly (S type): SX3000-51-7A
- SUP/EXH block assembly (RS type): SX3000-51-8A

For SMC use only

Enter ordered part numbers.

	Part no.	Qty.

	Part no.	Qty.

Order no.	
Clerk (code no.)	
Dept. code	

Note 1) For special specifications of the SUP/EXH block assembly mounting position, list its part number and quantity with the manifold type.
Note 2) Refer to pages 157 and 158 for 3 port valve part numbers.

SMC

Copy this page for use as needed.

Date: / /

SY5000: Flat Ribbon Cable 26 Pins

Plug-in, DIN Rail Manifold

Manifold Specification Sheet

Customer name	
Contact person	
Specification sheet no.	
Purchase order no.	
Equipment name	
Quantity	set(s) Required date

Follow procedures ① through ③.

❶ Manifold Type

Enter the symbols for required specifications in the boxes below.

SS5Y5-45 □ P □ — □ □ □ — □ □ □

Common specification

Nil	Positive COM
N	Negative COM

Connector mounting position

Symbol	Mounting position
U	U side
D	D side

Stations

Symbol	Stations	Note
02	2 stations	Single wiring specification (Up to 20 solenoids applicable)
⋮	⋮	
20	20 stations	

Note 1) Includes the number of blanking plate assemblies.
Note 2) Two stations are required for valves other than single solenoid, because they are dual body type.

SUP/EXH block assembly mounting position

Symbol	Mounting position	Applicable stations
U	U side	2 to 10 stations
D	D side	
B	Both sides	2 to 20 stations
M	Special specifications	

∗For special specifications, indicate in the station table below.

SUP/EXH block assembly specification

Symbol	Specification
Nil	Standard/Internal pilot
R∗	External pilot
S∗	Internal pilot/Built-in silencer
RS∗	External pilot/Built-in silencer

Note) An asterisk (∗) indicates order made products.

Voltage specification

Nil	24VDC
12V	12VDC

A/B port size

Symbol	Specification
C4	ø4 One-touch fitting
C6	ø6 One-touch fitting
C8	ø8 One-touch fitting
M	Mixed

Note) For mixed mounting, indicate C4, C6 or C8 instead of "○" in the station table.

Option

When a DIN rail longer than the specified stations is necessary, indicate the number of required stations. (Max. 20 stations)

❷ Valve Type

Enter the symbols for required specifications as indicated below.

SY5 ∗∗∗ ∗ — □ F U □

Ⓐ Ⓑ

Type of actuation/Body option

140	2 position single solenoid	Standard
245	2 position double solenoid	Dual body type
345	3 position closed center	
445	3 position exhaust center	
545	3 position pressure center	

Indicate in the station table below.

Pilot type

Nil	Internal pilot
R	External pilot

When using an external pilot valve, enter a "○" in the appropriate box for "External Pilot Specification".

Ⓐ Rated voltage

5	24VDC
6	12VDC

∗ Voltage must correspond with the manifold voltage specification.

Ⓑ Manual override

Nil	Non-locking push type
D	Push-turn locking slotted type
E	Push-turn locking lever type

(Maximum number of valves: 20 stations
However, up to 20 solenoids are applicable.)

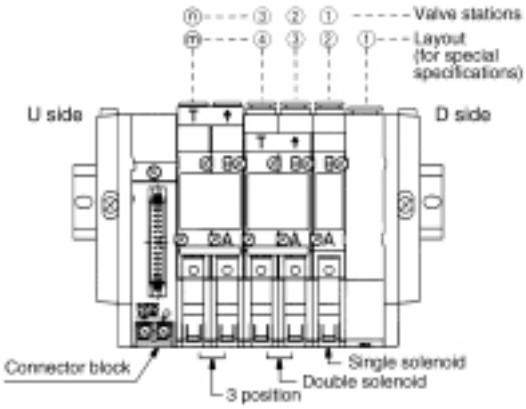

Note) The connector block is not included with the stations or layout.

❸ Stations

- **Enter a "○" for one station for a single solenoid type.**
- **Enter a "○" over two stations for a double solenoid or 3 position type. (See the entry example below.)**

Stations or layout				20	19	18	17	16	15	14	13	12	11	10	9	8	7	6	5	4	3	2	1	Quantity
ⓐ 2 position	Single solenoid																							
	Double solenoid																							
3 position	Closed center	Refer to the entry example.																						
	Exhaust center																							
	Pressure center																							
3 port valves	N.C. single																							
	N.C. double																							
	N.O. single																							
	N.O. double																							
Blanking plate assembly																								
External pilot specification (Enter only for external pilot)																								
ⓑ Special specifications	SUP/EXH block assembly																							
ⓒ SUP block disc																								
ⓒ EXH block disc (2 pcs./location)																								

[Entry example]

Stations or layout			6	5	4	3	2	1
ⓐ 2 position	Single solenoid				C6			○
	Double solenoid		C	8		○		

For mixed port sizes

Notes:
- Blanking plate assembly: SX5000-76-2A
- SUP block disc: SX5000-77-1A
- EXH block disc: SX5000-77-1A (2 pcs./location)
- SUP/EXH block assembly (standard): SX5000-51-2A
- SUP/EXH block assembly (R type): SX5000-51-6A
- SUP/EXH block assembly (S type): SX5000-51-7A
- SUP/EXH block assembly (RS type): SX5000-51-8A

For SMC use only

Enter ordered part numbers.

	Part no.	Qty.

	Part no.	Qty.

Order no.	
Clerk (code no.)	
Dept. code	

Note 1) For special specifications of the SUP/EXH block assembly mounting position, list its part number and quantity with the manifold type.
Note 2) Refer to pages 157 and 158 for 3 port valve part numbers.

Copy this page for use as needed.

Date: / /

SY3000: Flat Ribbon Cable 20 Pins

Plug-in, DIN Rail Manifold

Manifold Specification Sheet

Customer name	
Contact person	
Specification sheet no.	
Purchase order no.	
Equipment name	
Quantity	set(s) Required date

Follow procedures ① through ③.

❶ Manifold Type

Enter the symbols for required specifications in the boxes below.

SS5Y3-45 [ ] PG [ ]–[ ][ ][ ]–[ ]–[ ][ ]

Common specification

Nil	Positive COM
N	Negative COM

Connector mounting position

Symbol	Mounting position
U	U side
D	D side

Stations

Symbol	Stations	Note
02	2 stations	Single wiring specification (Up to 16 solenoids applicable)
⋮	⋮	
16	16 stations	

Note 1) Includes the number of blanking plate assemblies.
Note 2) Two stations are required for valves other than single solenoid, because they are dual body type.

SUP/EXH block assembly mounting position

Symbol	Mounting position	Applicable stations
U	U side	2 to 10 stations
D	D side	
B	Both sides	2 to 16 stations
M	Special specifications	

∗ For special specifications, indicate in the station table below.

SUP/EXH block assembly specification

Symbol	Specification
Nil	Standard/Internal pilot
R*	External pilot
S*	Internal pilot/Built-in silencer
RS*	External pilot/Built-in silencer

Note) An asterisk (∗) indicates order made products.

Voltage specification

Nil	24VDC
12V	12VDC

Option

When a DIN rail longer than the specified stations is necessary, indicate the number of required stations. (Max. 20 stations)

A/B port size

Symbol	Specification
C4	ø4 One-touch fitting
C6	ø6 One-touch fitting
M	Mixed

Note) For mixed mounting, indicate C4 or C6 instead of "○" in the station table.

❷ Valve Type

Enter the symbols for required specifications as indicated below.

SY3 ∗∗∗ ∗ – [ ] F U [ ]

Ⓐ Ⓑ

Type of actuation/Body option

140	2 position single solenoid	Standard
245	2 position double solenoid	Dual body type
345	3 position closed center	
445	3 position exhaust center	
545	3 position pressure center	

Indicate in the station table below.

Pilot type

Nil	Internal pilot
R	External pilot

When using an external pilot valve, enter a "○" in the appropriate box for "External Pilot Specification".

Ⓐ Rated voltage

5	24VDC
6	12VDC

∗ Voltage must correspond with the manifold voltage specification.

Ⓑ Manual override

Nil	Non-locking push type
D	Push-turn locking slotted type
E	Push-turn locking lever type

(Maximum number of valves: 16 stations
However, up to 16 solenoids are applicable.)

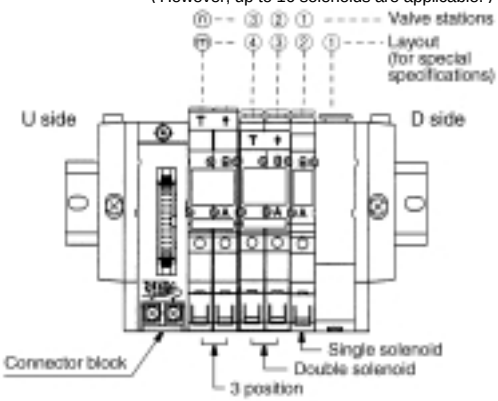

Note) The connector block is not included with the stations or layout.

❸ Stations

- **Enter a "○" for one station for a single solenoid type.**
- **Enter a "○" over two stations for a double solenoid or 3 position type. (See the entry example below.)**

Stations or layout				16	15	14	13	12	11	10	9	8	7	6	5	4	3	2	1	Quantity
ⓐ 2 position	Single solenoid																			
	Double solenoid	Refer to the entry example.																		
ⓐ 3 position	Closed center																			
	Exhaust center																			
	Pressure center																			
ⓐ 3 port valves	N.C. single																			
	N.C. double																			
	N.O. single																			
	N.O. double																			
ⓐ Blanking plate assembly																				
ⓐ External pilot specification (Enter only for external pilot)																				
ⓑ Special specifications	SUP/EXH block assembly																			
ⓒ SUP block disc																				
ⓒ EXH block disc (2 pcs./location)																				

[Entry example]

Stations or layout			6	5	4	3	2	1
ⓐ 2 position	Single solenoid				C4			○
	Double solenoid		C	6		○		

For mixed port sizes

Notes:
- Blanking plate assembly: SX3000-75-2A
- SUP block disc: SX3000-77-1A
- EXH block disc: SX3000-77-1A (2 pcs./location)
- SUP/EXH block assembly (standard): SX3000-51-2A
- SUP/EXH block assembly (R type): SX3000-51-6A
- SUP/EXH block assembly (S type): SX3000-51-7A
- SUP/EXH block assembly (RS type): SX3000-51-8A

For SMC use only

Enter ordered part numbers.

	Part no.	Qty.

	Part no.	Qty.

Order no.	
Clerk (code no.)	
Dept. code	

Note 1) For special specifications of the SUP/EXH block assembly mounting position, list its part number and quantity with the manifold type.
Note 2) Refer to pages 157 and 158 for 3 port valve part numbers.

SMC

Copy this page for use as needed.

Date: / /

SY5000: Flat Ribbon Cable 20 Pins

Plug-in, DIN Rail Manifold

Manifold Specification Sheet

Customer name	
Contact person	
Specification sheet no.	
Purchase order no.	
Equipment name	
Quantity	set(s) Required date

Follow procedures ① through ③.

❶ Manifold Type

Enter the symbols for required specifications in the boxes below.

SS5Y5-45 □ PG □ — □ □ □ — □ — □ □

Common specification

Nil	Positive COM
N	Negative COM

Connector mounting position

Symbol	Mounting position
U	U side
D	D side

Stations

Symbol	Stations	Note
02	2 stations	Single wiring specification (Up to 16 solenoids applicable)
⋮	⋮	
16	16 stations	

Note 1) Includes the number of blanking plate assemblies.
Note 2) Two stations are required for valves other than single solenoid, because they are dual body type.

SUP/EXH block assembly mounting position

Symbol	Mounting position	Applicable stations
U	U side	2 to 10 stations
D	D side	
B	Both sides	2 to 16 stations
M	Special specifications	

∗For special specifications, indicate in the station table below.

SUP/EXH block assembly specification

Symbol	Specification
Nil	Standard/Internal pilot
R*	External pilot
S*	Internal pilot/Built-in silencer
RS*	External pilot/Built-in silencer

Note) An asterisk (∗) indicates order made products.

Voltage specification

Nil	24VDC
12V	12VDC

A/B port size

Symbol	Specification
C4	ø4 One-touch fitting
C6	ø6 One-touch fitting
C8	ø8 One-touch fitting
M	Mixed

Note) For mixed mounting, indicate C4, C6 or C8 instead of "○" in the station table.

Option

When a DIN rail longer than the specified stations is necessary, indicate the number of required stations. (Max. 20 stations)

❷ Valve Type

Enter the symbols for required specifications as indicated below.

SY5 ∗∗∗ ∗ — □ F U □

Ⓐ Ⓑ

Type of actuation/Body option

140	2 position single solenoid	Standard
245	2 position double solenoid	Dual body type
345	3 position closed center	
445	3 position exhaust center	
545	3 position pressure center	

Indicate in the station table below.

Pilot type

Nil	Internal pilot
R	External pilot

When using an external pilot valve, enter a "○" in the appropriate box for "External Pilot Specification".

Ⓐ Rated voltage

5	24VDC
6	12VDC

∗ Voltage must correspond with the manifold voltage specification.

Ⓑ Manual override

Nil	Non-locking push type
D	Push-turn locking slotted type
E	Push-turn locking lever type

(Maximum number of valves: 16 stations
However, up to 16 solenoids are applicable.)

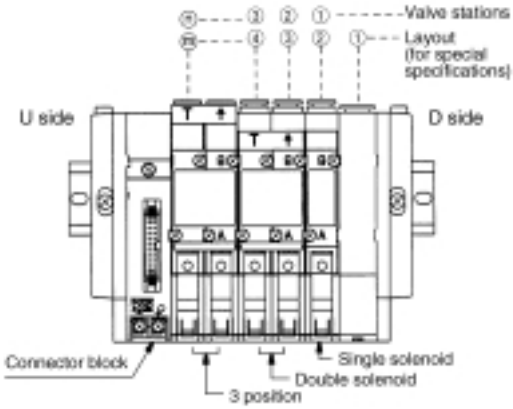

Note) The connector block is not included with the stations or layout.

❸ Stations

- **Enter a "○" for one station for a single solenoid type.**
- **Enter a "○" over two stations for a double solenoid or 3 position type. (See the entry example below.)**

Stations or layout				16	15	14	13	12	11	10	9	8	7	6	5	4	3	2	1	Quantity
ⓐ 2 position	Single solenoid	Refer to the entry example.																		
	Double solenoid																			
3 position	Closed center																			
	Exhaust center																			
	Pressure center																			
3 port valves	N.C. single																			
	N.C. double																			
	N.O. single																			
	N.O. double																			
Blanking plate assembly																				
External pilot specification (Enter only for external pilot)																				
ⓑ Special specifications	SUP/EXH block assembly																			
ⓒ SUP block disc																				
EXH block disc (2 pcs./location)																				

[Entry example]

Stations or layout			6	5	4	3	2	1
ⓐ 2 position	Single solenoid				C6			○
	Double solenoid		C	8		○		

For mixed port sizes

Notes:
- Blanking plate assembly: SX5000-76-2A
- SUP block disc: SX5000-77-1A
- EXH block disc: SX5000-77-1A (2 pcs./location)
- SUP/EXH block assembly (standard): SX5000-51-2A
- SUP/EXH block assembly (R type): SX5000-51-6A
- SUP/EXH block assembly (S type): SX5000-51-7A
- SUP/EXH block assembly (RS type): SX5000-51-8A

For SMC use only

Enter ordered part numbers.

	Part no.	Qty.

	Part no.	Qty.

Order no.	
Clerk (code no.)	
Dept. code	

Note 1) For special specifications of the SUP/EXH block assembly mounting position, list its part number and quantity with the manifold type.
Note 2) Refer to pages 157 and 158 for 3 port valve part numbers.

Copy this page for use as needed.

Date: / /

SY3000: Flat Ribbon Cable 10 Pins

Plug-in, DIN Rail Manifold

Manifold Specification Sheet

Customer name	
Contact person	
Specification sheet no.	
Purchase order no.	
Equipment name	
Quantity	set(s) Required date

Follow procedures ① through ③.

❶ Manifold Type

Enter the symbols for required specifications in the boxes below.

SS5Y3-45 □ PH □ — □ □ □ — □ — □ — □

Common specification

Nil	Positive COM
N	Negative COM

Connector mounting position

Symbol	Mounting position
U	U side
D	D side

Stations

Symbol	Stations	Note
02	2 stations	Single wiring specification (Up to 8 solenoids applicable)
⋮	⋮	
08	8 stations	

Note 1) Includes the number of blanking plate assemblies.
Note 2) Two stations are required for valves other than single solenoid, because they are dual body type.

SUP/EXH block assembly mounting position

Symbol	Mounting position
U	U side
D	D side
B	Both sides
M	Special specifications

∗ For special specifications, indicate in the station table below.

SUP/EXH block assembly specification

Symbol	Specification
Nil	Standard/Internal pilot
R*	External pilot
S*	Internal pilot/Built-in silencer
RS*	External pilot/Built-in silencer

Note) An asterisk (∗) indicates order made products.

Voltage specification

Nil	24VDC
12V	12VDC

A/B port size

Symbol	Specification
C4	ø4 One-touch fitting
C6	ø6 One-touch fitting
M	Mixed

Note) For mixed mounting, indicate C4 or C6 instead of "○" in the station table.

Option

When a DIN rail longer than the specified stations is necessary, indicate the number of required stations. (Max. 20 stations)

❷ Valve Type

Enter the symbols for required specifications as indicated below.

SY3 ∗∗∗ ∗ — □ F U □

Ⓐ Ⓑ

Type actuation/Body option

140	2 position single solenoid	Standard
245	2 position double solenoid	Dual body type
345	3 position closed center	
445	3 position exhaust center	
545	3 position pressure center	

Indicate in the station table below.

Pilot type

Nil	Internal pilot
R	External pilot

When using an external pilot valve, enter a "○" in the appropriate box for "External Pilot Specification".

Ⓐ Rated voltage

5	24VDC
6	12VDC

∗ Voltage must correspond with the manifold voltage specification.

Ⓑ Manual override

Nil	Non-locking push type
D	Push-turn locking slotted type
E	Push-turn locking lever type

(Maximum number of valves: 8 stations
However, up to 8 solenoids are applicable.)

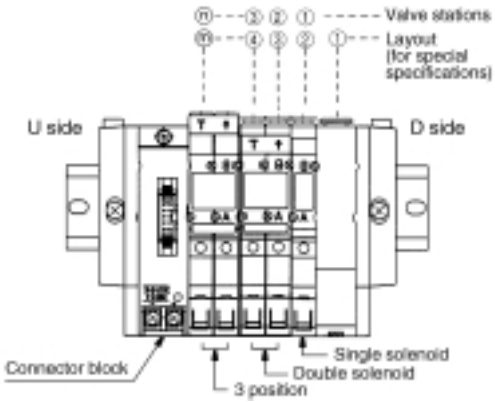

Note) The connector block is not included with the stations or layout.

❸ Stations

- **Enter a "○" for one station for a single solenoid type.**
- **Enter a "○" over two stations for a double solenoid or 3 position type. (See the entry example below.)**

Stations or layout				8	7	6	5	4	3	2	1	Quantity
ⓐ	2 position	Single solenoid										
		Double solenoid	Refer to the entry example.									
	3 position	Closed center										
		Exhaust center										
		Pressure center										
	3 port valves	N.C. single										
		N.C. double										
		N.O. single										
		N.O. double										
	Blanking plate assembly											
	External pilot specification (Enter only for external pilot)											
ⓑ	Special specifications	SUP/EXH block assembly										
ⓒ	SUP block disc											
	EXH block disc (2 pcs./location)											

[Entry example]

Stations or layout			6	5	4	3	2	1
ⓐ	2 position	Single solenoid			C4			○
		Double solenoid	C	6		○		

For mixed port sizes

Notes:
- Blanking plate assembly: SX3000-75-2A
- SUP block disc: SX3000-77-1A
- EXH block disc: SX3000-77-1A (2 pcs./location)
- SUP/EXH block assembly (standard): SX3000-51-2A
- SUP/EXH block assembly (R type): SX3000-51-6A
- SUP/EXH block assembly (S type): SX3000-51-7A
- SUP/EXH block assembly (RS type): SX3000-51-8A

For SMC use only

Enter ordered part numbers.

	Part no.	Qty.

	Part no.	Qty.

Order no.	
Clerk (code no.)	
Dept. code	

Note 1) For special specifications of the SUP/EXH block assembly mounting position, list its part number and quantity with the manifold type.
Note 2) Refer to pages 157 and 158 for 3 port valve part numbers.

SMC

Copy this page for use as needed.

Date: / /

SY5000: Flat Ribbon Cable 10 Pins

Plug-in, DIN Rail Manifold

Manifold Specification Sheet

Customer name	
Contact person	
Specification sheet no.	
Purchase order no.	
Equipment name	
Quantity	set(s) Required date

Follow procedures ① through ③.

❶ Manifold Type

Enter the symbols for required specifications in the boxes below.

SS5Y5-45 □ PH □ — □ □ □ — □ — □ □

Common specification

Nil	Positive COM
N	Negative COM

Connector mounting position

Symbol	Mounting position
U	U side
D	D side

Stations

Symbol	Stations	Note
02	2 stations	Single wiring specification (Up to 8 solenoids applicable)
⋮	⋮	
08	8 stations	

Note 1) Includes the number of blanking plate assemblies.
Note 2) Two stations are required for valves other than single solenoid, because they are dual body type.

SUP/EXH block assembly mounting position

Symbol	Mounting position
U	U side
D	D side
B	Both sides
M	Special specifications

∗For special specifications, indicate in the station table below.

SUP/EXH block assembly specification

Symbol	Specification
Nil	Standard/Internal pilot
R*	External pilot
S*	Internal pilot/Built-in silencer
RS*	External pilot/Built-in silencer

Note) An asterisk (∗) indicates order made products.

Voltage specification

Nil	24VDC
12V	12VDC

A/B port size

Symbol	Specification
C4	ø4 One-touch fitting
C6	ø6 One-touch fitting
C8	ø8 One-touch fitting
M	Mixed

Note) For mixed mounting, indicate C4, C6 or C8 instead of "○" in the station table.

Option

When a DIN rail longer than the specified stations is necessary, indicate the number of required stations. (Max. 20 stations)

❷ Valve Type

Enter the symbols for required specifications as indicated below.

SY5 ∗∗∗ ∗ — □ F U □

Ⓐ Ⓑ

Type of actuation/Body option

140	2 position single solenoid	Standard
245	2 position double solenoid	Dual body type
345	3 position closed center	
445	3 position exhaust center	
545	3 position pressure center	

Indicate in the station table below.

Pilot type

Nil	Internal pilot
R	External pilot

When using an external pilot valve, enter a "○" in the appropriate box for "External Pilot Specification".

Ⓐ Rated voltage

5	24VDC
6	12VDC

∗ Voltage must correspond with the manifold voltage specification.

Ⓑ Manual override

Nil	Non-locking push type
D	Push-turn locking slotted type
E	Push-turn locking lever type

(Maximum number of valves: 8 stations
However, up to 8 solenoids are applicable.)

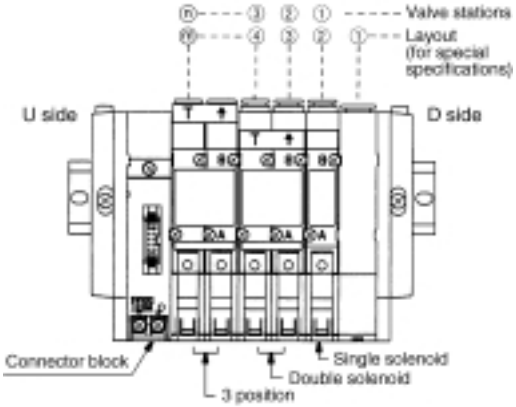

Note) The connector block is not included with the stations or layout.

❸ Stations

- **Enter a "○" for one station for a single solenoid type.**
- **Enter a "○" over two stations for a double solenoid or 3 position type. (See the entry example below.)**

Stations or layout				8	7	6	5	4	3	2	1	Quantity
ⓐ	2 position	Single solenoid										
		Double solenoid	Refer to the entry example.									
	3 position	Closed center										
		Exhaust center										
		Pressure center										
	3 port valves	N.C. single										
		N.C. double										
		N.O. single										
		N.O. double										
	Blanking plate assembly											
	External pilot specification (Enter only for external pilot)											
ⓑ	Special specifications	SUP/EXH block assembly										
ⓒ	SUP block disc											
	EXH block disc (2 pcs./location)											

[Entry example]

Stations or layout			6	5	4	3	2	1
ⓐ	2 position	Single solenoid			C6			○
		Double solenoid	C	8		○		

For mixed port sizes

Notes:
- Blanking plate assembly: SX5000-76-2A
- SUP block disc: SX5000-77-1A
- EXH block disc: SX5000-77-1A (2 pcs./location)
- SUP/EXH block assembly (standard): SX5000-51-2A
- SUP/EXH block assembly (R type): SX5000-51-6A
- SUP/EXH block assembly (S type): SX5000-51-7A
- SUP/EXH block assembly (RS type): SX5000-51-8A

For SMC use only

Enter ordered part numbers.

	Part no.	Qty.

	Part no.	Qty.

Order no.	
Clerk (code no.)	
Dept. code	

Note 1) For special specifications of the SUP/EXH block assembly mounting position, list its part number and quantity with the manifold type.
Note 2) Refer to pages 157 and 158 for 3 port valve part numbers.

Copy this page for use as needed.

Date: / /

SY3000: Terminal Block (9 Pins)

Plug-in, DIN Rail Manifold

Manifold Specification Sheet

Customer name	
Contact person	
Specification sheet no.	
Purchase order no.	
Equipment name	
Quantity	set(s) Required date

Follow procedures ① through ③.

❶ Manifold Type

Enter the symbols for required specifications in the boxes below.

SS5Y3-45 T [ ] [ ] [ ] [ ] [ ] [ ]

Connector mounting position

Symbol	Mounting position
U	U side
D	D side

Stations

Symbol	Stations	Note
02	2 stations	Single wiring specification (Up to 8 solenoids applicable)
⋮	⋮	
08	8 stations	

Note 1) Includes the number of blanking plate assemblies.
Note 2) Two stations are required for valves other than single solenoid, because they are dual body type.

SUP/EXH block assembly mounting position

Symbol	Mounting position
U	U side
D	D side
B	Both sides
M	Special specifications

∗For special specifications, indicate in the station table below.

SUP/EXH block assembly specification

Symbol	Specification
Nil	Standard/Internal pilot
R∗	External pilot
S∗	Internal pilot/Built-in silencer
RS∗	External pilot/Built-in silencer

Note) An asterisk (∗) indicates order made products.

Option
When a DIN rail longer than the specified stations is necessary, indicate the number of required stations. (Max. 20 stations)

A/B port size

Symbol	Specification
C4	ø4 One-touch fitting
C6	ø6 One-touch fitting
M	Mixed

Note) For mixed mounting, indicate C4 or C6 instead of "○" in the station table.

❷ Valve Type

Enter the symbols for required specifications as indicated below.

SY3 ∗∗∗ ∗ [ ] **F U** [ ]
(A) (B)

Type of actuation/Body option

140	2 position single solenoid	Standard
245	2 position double solenoid	Dual body type
345	3 position closed center	
445	3 position exhaust center	
545	3 position pressure center	

Indicate in the station table below.

Pilot type

Nil	Internal pilot
R	External pilot

When using an external pilot valve, enter a "○" in the appropriate box for "External Pilot Specification".

(A) Rated voltage

5	24VDC
6	12VDC

(B) Manual override

Nil	Non-locking push type
D	Push-turn locking slotted type
E	Push-turn locking lever type

(Maximum number of valves: 8 stations
However, up to 8 solenoids are applicable.)

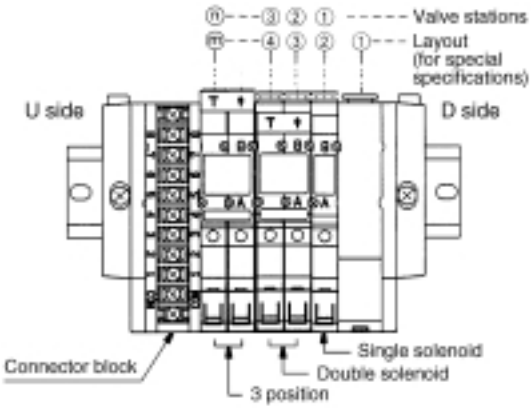

Note) The connector block is not included with the stations or layout.

❸ Stations

- **Enter a "○" for one station for a single solenoid type.**
- **Enter a "○" over two stations for a double solenoid or 3 position type. (See the entry example below.)**

Stations or layout									8	7	6	5	4	3	2	1	Quantity
ⓐ	2 position	Single solenoid															
		Double solenoid	Refer to the entry example.														
	3 position	Closed center															
		Exhaust center															
		Pressure center															
	3 port valves	N.C. single															
		N.C. double															
		N.O. single															
		N.O. double															
	Blanking plate assembly																
	External pilot specification (Enter only for external pilot)																
ⓑ	Special specifications	SUP/EXH block assembly															
ⓒ	SUP block disc																
	EXH block disc (2 pcs./location)																

[Entry example]

Stations or layout			6	5	4	3	2	1
ⓐ	2 position	Single solenoid			C4			○
		Double solenoid	C	6		○		

For mixed port sizes

Notes:
- Blanking plate assembly: SX3000-75-2A
- SUP block disc: SX3000-77-1A
- EXH block disc: SX3000-77-1A (2 pcs./location)
- SUP/EXH block assembly (standard): SX3000-51-2A
- SUP/EXH block assembly (R type): SX3000-51-6A
- SUP/EXH block assembly (S type): SX3000-51-7A
- SUP/EXH block assembly (RS type): SX3000-51-8A

For SMC use only

Enter ordered part numbers.

	Part no.	Qty.

	Part no.	Qty.

Order no.	
Clerk (code no.)	
Dept. code	

Note 1) For special specifications of the SUP/EXH block assembly mounting position, list its part number and quantity with the manifold type.
Note 2) Refer to pages 157 and 158 for 3 port valve part numbers.

Copy this page for use as needed.

Date: / /

SY5000: Terminal Block (9 Pins)

Plug-in, DIN Rail Manifold

Manifold Specification Sheet

Customer name			
Contact person			
Specification sheet no.			
Purchase order no.			
Equipment name			
Quantity	set(s)	Required date	

Follow procedures ① through ③.

❶ Manifold Type

Enter the symbols for required specifications in the boxes below.

SS5Y5-45 T □ — □ □ □ — □ — □

Connector mounting position

Symbol	Mounting position
U	U side
D	D side

Stations

Symbol	Stations	Note
02	2 stations	Single wiring specification (Up to 8 solenoids applicable)
⋮	⋮	
08	8 stations	

Note 1) Includes the number of blanking plate assemblies.
Note 2) Two stations are required for valves other than single solenoid, because they are dual body type.

SUP/EXH block assembly mounting position

Symbol	Mounting position
U	U side
D	D side
B	Both sides
M	Special specifications

∗For special specifications, indicate in the station table below.

SUP/EXH block assembly specification

Symbol	Specification
Nil	Standard/Internal pilot
R∗	External pilot
S∗	Internal pilot/Built-in silencer
RS∗	External pilot/Built-in silencer

Note) An asterisk (∗) indicates order made products.

A/B port size

Symbol	Specification
C4	ø4 One-touch fitting
C6	ø6 One-touch fitting
C8	ø8 One-touch fitting
M	Mixed

Note) For mixed mounting, indicate C4, C6 or C8 instead of "○" in the station table.

Option
When a DIN rail longer than the specified stations is necessary, indicate the number of required stations. (Max. 20 stations)

❷ Valve Type

Enter the symbols for required specifications as indicated below.

SY5 ∗∗∗ ∗ — □ **F U** □
Ⓐ Ⓑ

Type of actuation/Body option

140	2 position single solenoid	Standard
245	2 position double solenoid	Dual body type
345	3 position closed center	
445	3 position exhaust center	
545	3 position pressure center	

Indicate in the station table below.

Pilot type

Nil	Internal pilot
R	External pilot

When using an external pilot valve, enter a "○" in the appropriate box for "External Pilot Specification".

Ⓐ Rated voltage

5	24VDC
6	12VDC

Ⓑ Manual override

Nil	Non-locking push type
D	Push-turn locking slotted type
E	Push-turn locking lever type

(Maximum number of valves: 8 stations
However, up to 8 solenoids are applicable.)

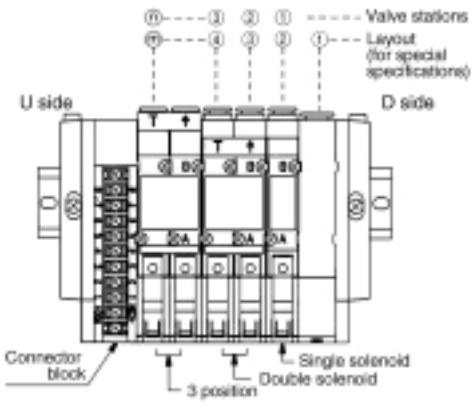

Note) The connector block is not included with the stations or layout.

❸ Stations

- **Enter a "○" for one station for a single solenoid type.**
- **Enter a "○" over two stations for a double solenoid or 3 position type. (See the entry example below.)**

Stations or layout																	Quantity
								8	7	6	5	4	3	2	1		
ⓐ	2 position	Single solenoid															
		Double solenoid	Refer to the entry example.														
	3 position	Closed center															
		Exhaust center															
		Pressure center															
	3 port valves	N.C. single															
		N.C. double															
		N.O. single															
		N.O. double															
	Blanking plate assembly																
	External pilot specification (Enter only for external pilot)																
ⓑ	Special specifications	SUP/EXH block assembly															
ⓒ	SUP block disc																
	EXH block disc (2 pcs./location)																

[Entry example]

Stations or layout			6	5	4	3	2	1
ⓐ	2 position	Single solenoid			C6			○
		Double solenoid	C	8		○		

For mixed port sizes

Notes:
- Blanking plate assembly: SX5000-76-2A
- SUP block disc: SX5000-77-1A
- EXH block disc: SX5000-77-1A (2 pcs./location)
- SUP/EXH block assembly (standard): SX5000-51-2A
- SUP/EXH block assembly (R type): SX5000-51-6A
- SUP/EXH block assembly (S type): SX5000-51-7A
- SUP/EXH block assembly (RS type): SX5000-51-8A

For SMC use only

Enter ordered part numbers.

	Part no.	Qty.

	Part no.	Qty.

Order no.	
Clerk (code no.)	
Dept. code	

Note 1) For special specifications of the SUP/EXH block assembly mounting position, list its part number and quantity with the manifold type.
Note 2) Refer to pages 157 and 158 for 3 port valve part numbers.

Copy this page for use as needed.

Date: / /

Customer name	
Contact person	
Specification sheet no.	
Purchase order no.	
Equipment name	
Quantity	set(s) Required date

SY3000: Terminal Block (18 Pins)

Plug-in, DIN Rail Manifold

Manifold Specification Sheet

Follow procedures ① through ③.

① Manifold Type

Enter the symbols for required specifications in the boxes below.

SS5Y3-45 T1 □ – □ □ □ – □ – □

Connector mounting position

Symbol	Mounting position
U	U side
D	D side

Stations

Symbol	Stations	Note
02	2 stations	Single wiring specification (Up to 17 solenoids applicable)
⋮	⋮	
17	17 stations	

Note 1) Includes the number of blanking plate assemblies.
Note 2) Two stations are required for valves other than single solenoid, because they are dual body type.

SUP/EXH block assembly mounting position

Symbol	Mounting position	Applicable stations
U	U side	2 to 10 stations
D	D side	
B	Both sides	2 to 17 stations
M	Special specifications	

∗For special specifications, indicate in the station table below.

SUP/EXH block assembly specification

Symbol	Specification
Nil	Standard/Internal pilot
R∗	External pilot
S∗	Internal pilot/Built-in silencer
RS∗	External pilot/Built-in silencer

Note) An asterisk (∗) indicates order made products.

Option
When a DIN rail longer than the specified stations is necessary, indicate the number of required stations. (Max. 20 stations)

A/B port size

Symbol	Specification
C4	ø4 One-touch fitting
C6	ø6 One-touch fitting
M	Mixed

Note) For mixed mounting, indicate C4 or C6 instead of "○" in the station table.

(Maximum number of valves: 17 stations
However, up to 17 solenoids are applicable.)

② Valve Type

Enter the symbols for required specifications as indicated below.

SY3 ∗∗∗ ∗ – □ **F U** □
Ⓐ Ⓑ

Type of actuation/Body option

140	2 position single solenoid	Standard
245	2 position double solenoid	Dual body type
345	3 position closed center	
445	3 position exhaust center	
545	3 position pressure center	

Indicate in the station table below.

Pilot type

Nil	Internal pilot
R	External pilot

When using an external pilot valve, enter a "○" in the appropriate box for "External Pilot Specification".

Ⓐ Rated voltage

5	24VDC
6	12VDC

Ⓑ Manual override

Nil	Non-locking push type
D	Push-turn locking slotted type
E	Push-turn locking lever type

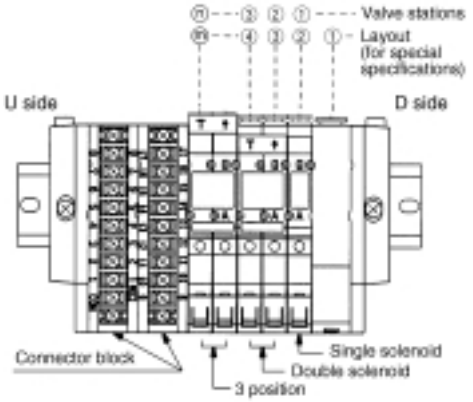

Note) The connector block is not included with the stations or layout.

③ Stations

- **Enter a "○" for one station for a single solenoid type.**
- **Enter a "○" over two stations for a double solenoid or 3 position type. (See the entry example below.)**

Stations or layout				17	16	15	14	13	12	11	10	9	8	7	6	5	4	3	2	1	Quantity
ⓐ	2 position	Single solenoid																			
		Double solenoid	Refer to the entry example.																		
	3 position	Closed center																			
		Exhaust center																			
		Pressure center																			
	3 port valves	N.C. single																			
		N.C. double																			
		N.O. single																			
		N.O. double																			
	Blanking plate assembly																				
	External pilot specification (Enter only for external pilot)																				
ⓑ	Special specifications	SUP/EXH block assembly																			
ⓒ	SUP block disc																				
	EXH block disc (2 pcs./location)																				

[Entry example]

Stations or layout			6	5	4	3	2	1
ⓐ	2 position	Single solenoid			C4			○
		Double solenoid	C	6		○		

For mixed port sizes

Notes:
- Blanking plate assembly: SX3000-75-2A
- SUP block disc: SX3000-77-1A
- EXH block disc: SX3000-77-1A (2 pcs./location)
- SUP/EXH block assembly (standard): SX3000-51-2A
- SUP/EXH block assembly (R type): SX3000-51-6A
- SUP/EXH block assembly (S type): SX3000-51-7A
- SUP/EXH block assembly (RS type): SX3000-51-8A

For SMC use only

Enter ordered part numbers.

	Part no.	Qty.

	Part no.	Qty.

Order no.	
Clerk (code no.)	
Dept. code	

Note 1) For special specifications of the SUP/EXH block assembly mounting position, list its part number and quantity with the manifold type.
Note 2) Refer to pages 157 and 158 for 3 port valve part numbers.

Copy this page for use as needed.

Date: / /

SY5000: Terminal Block (18 Pins)

Plug-in, DIN Rail Manifold

Manifold Specification Sheet

Customer name	
Contact person	
Specification sheet no.	
Purchase order no.	
Equipment name	
Quantity	set(s) Required date

Follow procedures ① through ③.

❶ Manifold Type

Enter the symbols for required specifications in the boxes below.

SS5Y5-45 T1 □ — □ □ □ — □ — □

Connector mounting position

Symbol	Mounting position
U	U side
D	D side

Stations

Symbol	Stations	Note
02	2 stations	Single wiring specification (Up to 17 solenoids applicable)
⋮	⋮	
17	17 stations	

Note 1) Includes the number of blanking plate assemblies.
Note 2) Two stations are required for valves other than single solenoid, because they are dual body type.

SUP/EXH block assembly mounting position

Symbol	Mounting position	Applicable stations
U	U side	2 to 10 stations
D	D side	
B	Both sides	2 to 17 stations
M	Special specifications	

∗For special specifications, indicate in the station table below.

SUP/EXH block assembly specification

Symbol	Specification
Nil	Standard/Internal pilot
R*	External pilot
S*	Internal pilot/Built-in silencer
RS*	External pilot/Built-in silencer

Note) An asterisk (∗) indicates order made products.

A/B port size

Symbol	Specification
C4	ø4 One-touch fitting
C6	ø6 One-touch fitting
C8	ø8 One-touch fitting
M	Mixed

Note) For mixed mounting, indicate C4, C6 or C8 instead of "○" in the station table.

Option
When a DIN rail longer than the specified stations is necessary, indicate the number of required stations. (Max. 20 stations)

(Maximum number of valves: 17 stations
However, up to 17 solenoids are applicable.)

❷ Valve Type

Enter the symbols for required specifications as indicated below.

SY5 ∗∗∗ ∗ — □ F U □
Ⓐ Ⓑ

Type of actuation/Body option

140	2 position single solenoid	Standard
245	2 position double solenoid	Dual body type
345	3 position closed center	
445	3 position exhaust center	
545	3 position pressure center	

Indicate in the station table below.

Pilot type

Nil	Internal pilot
R	External pilot

When using an external pilot valve, enter a "○" in the appropriate box for "External Pilot Specification".

Ⓐ Rated voltage

5	24VDC
6	12VDC

Ⓑ Manual override

Nil	Non-locking push type
D	Push-turn locking slotted type
E	Push-turn locking lever type

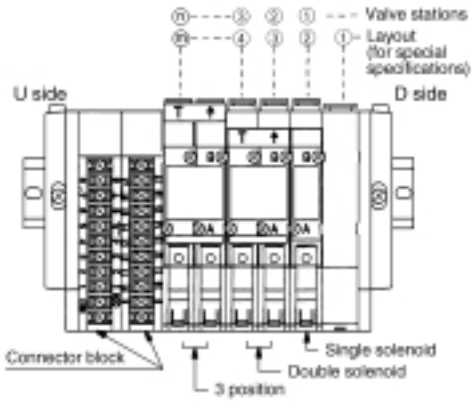

Note) The connector block is not included with the stations or layout.

❸ Stations

- **Enter a "○" for one station for a single solenoid type.**
- **Enter a "○" over two stations for a double solenoid or 3 position type. (See the entry example below.)**

Stations or layout				17	16	15	14	13	12	11	10	9	8	7	6	5	4	3	2	1	Quantity
ⓐ	2 position	Single solenoid																			
		Double solenoid	Refer to the entry example.																		
	3 position	Closed center																			
		Exhaust center																			
		Pressure center																			
	3 port valves	N.C. single																			
		N.C. double																			
		N.O. single																			
		N.O. double																			
	Blanking plate assembly																				
	External pilot specification (Enter only for external pilot)																				
ⓑ	Special specifications	SUP/EXH block assembly																			
ⓒ	SUP block disc																				
	EXH block disc (2 pcs./location)																				

[Entry example]

Stations or layout			6	5	4	3	2	1
ⓐ	2 position	Single solenoid			C6			○
		Double solenoid	C	8		○		

For mixed port sizes

Notes:
- Blanking plate assembly: SX5000-76-2A
- SUP block disc: SX5000-77-1A
- EXH block disc: SX5000-77-1A (2 pcs./location)
- SUP/EXH block assembly (standard): SX5000-51-2A
- SUP/EXH block assembly (R type): SX5000-51-6A
- SUP/EXH block assembly (S type): SX5000-51-7A
- SUP/EXH block assembly (RS type): SX5000-51-8A

For SMC use only

Enter ordered part numbers.

	Part no.	Qty.

	Part no.	Qty.

Order no.	
Clerk (code no.)	
Dept. code	

Note 1) For special specifications of the SUP/EXH block assembly mounting position, list its part number and quantity with the manifold type.
Note 2) Refer to pages 157 and 158 for 3 port valve part numbers.

Copy this page for use as needed.

Date: / /

Customer name	
Contact person	
Specification sheet no.	
Purchase order no.	
Equipment name	
Quantity	set(s) Required date

SY3000: PC Wiring System Compatible Flat Ribbon Cable 20 pins

Plug-in, DIN Rail Manifold

Manifold Specification Sheet

Follow procedures ① through ③.

① Manifold Type

Enter the symbols for required specifications in the boxes below.

SS5Y3-45G □ — □ □ □ — □ — □

Option
When a DIN rail longer than the specified stations is necessary, indicate the number of required stations. (Max. 20 stations)

Connector mounting position

Symbol	Mounting position
U	U side
D	D side

Stations

Symbol	Stations	Note
02	2 stations	Single wiring specification (Up to 16 solenoids applicable)
⋮	⋮	
16	16 stations	

Note 1) Includes the number of blanking plate assemblies.
Note 2) Two stations are required for valves other than single solenoid, because they are dual body type.

SUP/EXH block assembly mounting position

Symbol	Mounting position	Applicable stations
U	U side	2 to 10 stations
D	D side	
B	Both sides	2 to 16 stations
M	Special specifications	

∗For special specifications, indicate in the station table below.

SUP/EXH block assembly specification

Symbol	Specification
Nil	Standard/Internal pilot
R	External pilot
S	Internal pilot/Built-in silencer
RS	External pilot/Built-in silencer

A/B port size

Symbol	Specification
C4	ø4 One-touch fitting
C6	ø6 One-touch fitting
M	Mixed

Note) For mixed mounting, indicate C4 or C6 instead of "○" in the station table.

(Maximum number of valves: 16 stations
However, up to 16 solenoids are applicable.)

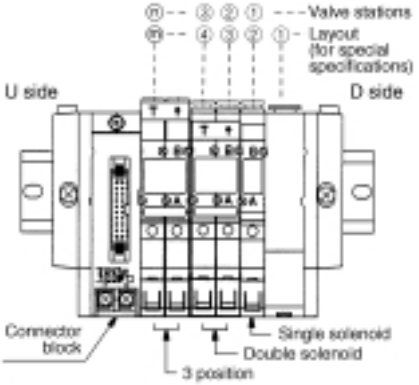

Note) The connector block is not included with the stations or layout.

② Valve Type

Enter the symbols for required specifications as indicated below.

SY3 ∗∗∗ ∗ **— 5FU** □ Ⓐ

Type of actuation/Body option

140	2 position single solenoid	Standard
245	2 position double solenoid	Dual body type
345	3 position closed center	
445	3 position exhaust center	
545	3 position pressure center	

Indicate in the station table below.

Pilot type

Nil	Internal pilot
R	External pilot

When using an external pilot valve, enter a "○" in the appropriate box for "External Pilot Specification".

Ⓐ Manual override

Nil	Non-locking push type
D	Push-turn locking slotted type
E	Push-turn locking lever type

③ Stations

- **Enter a "○" for one station for a single solenoid type.**
- **Enter a "○" over two stations for a double solenoid or 3 position type. (See the entry example below.) [For mixed specifications of A/B port sizes, enter C4 or C6 in the ⓐ section.]**

Stations or layout				20	19	18	17	16	15	14	13	12	11	10	9	8	7	6	5	4	3	2	1	Quantity
ⓐ	2 position	Single solenoid																						
		Double solenoid	Refer to the entry example.																					
	3 position	Closed center																						
		Exhaust center																						
		Pressure center																						
	3 port valves	N.C. single																						
		N.C. double																						
		N.O. single																						
		N.O. double																						
	Blanking plate assembly																							
	External pilot specification (Enter only for external pilot)																							
ⓑ	Special specifications	SUP/EXH block assembly																						
ⓒ	SUP block disc																							
	EXH block disc (2 pcs./location)																							

[Entry example]

Stations or layout				6	5	4	3	2	1
ⓐ	2 position	Single solenoid				C4			○
		Double solenoid		C	6		○		

For mixed port sizes

Notes:
- Blanking plate assembly: SX3000-75-2A
- SUP block disc: SX3000-77-1A
- EXH block disc: SX3000-77-1A (2 pcs./location)
- SUP/EXH block assembly (standard): SX3000-51-2A
- SUP/EXH block assembly (R type): SX3000-51-6A
- SUP/EXH block assembly (S type): SX3000-51-7A
- SUP/EXH block assembly (RS type): SX3000-51-8A

For SMC use only

Enter ordered part numbers.

	Part no.	Qty.

	Part no.	Qty.

Order no.	
Clerk (code no.)	
Dept. code	

Note 1) For special specifications of the SUP/EXH block assembly mounting position, list its part number and quantity with the manifold type.
Note 2) Refer to pages 157 and 158 for 3 port valve part numbers.

Copy this page for use as needed.

Date: / /

SY5000: PC Wiring System Compatible Flat Ribbon Cable 20 pins

Plug-in, DIN Rail Manifold

Manifold Specification Sheet

Customer name			
Contact person			
Specification sheet no.			
Purchase order no.			
Equipment name			
Quantity	set(s)	Required date	

Follow procedures ① through ③.

❶ Manifold Type

Enter the symbols for required specifications in the boxes below.

SS5Y5-45G □ — □ □ □ — □ — □

Connector mounting position

Symbol	Mounting position
U	U side
D	D side

Stations

Symbol	Stations	Note
02	2 stations	Single wiring specification (Up to 16 solenoids applicable)
⋮	⋮	
16	16 stations	

Note 1) Includes the number of blanking plate assemblies.
Note 2) Two stations are required for valves other than single solenoid, because they are dual body type.

SUP/EXH block assembly mounting position

Symbol	Mounting position	Applicable stations
U	U side	2 to 10 stations
D	D side	
B	Both sides	2 to 16 stations
M	Special specifications	

∗For special specifications, indicate in the station table below.

SUP/EXH block assembly specification

Symbol	Specification
Nil	Standard/Internal pilot
R	External pilot
S	Internal pilot/Built-in silencer
RS	External pilot/Built-in silencer

Option
When a DIN rail longer than the specified stations is necessary, indicate the number of required stations. (Max. 20 stations)

A/B port size

Symbol	Specification
C4	ø4 One-touch fitting
C6	ø6 One-touch fitting
C8	ø8 One-touch fitting
M	Mixed

Note) For mixed mounting, indicate C4, C6 or C8 instead of "○" in the station table.

(Maximum number of valves: 16 stations
However, up to 16 solenoids are applicable.)

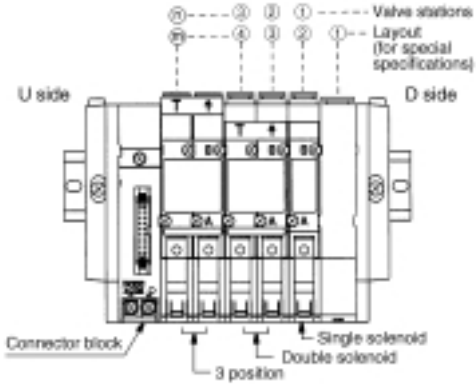

Note) The connector block is not included with the stations or layout.

❷ Valve Type

Enter the symbols for required specifications as indicated below.

SY5 ∗∗∗ ∗ — 5FU □ Ⓐ

Type of actuation/Body option

140	2 position single solenoid	Standard
245	2 position double solenoid	Dual body type
345	3 position closed center	
445	3 position exhaust center	
545	3 position pressure center	

Indicate in the station table below.

Pilot type

Nil	Internal pilot
R	External pilot

When using an external pilot valve, enter a "○" in the appropriate box for "External Pilot Specification".

Ⓐ Manual override

Nil	Non-locking push type
D	Push-turn locking slotted type
E	Push-turn locking lever type

❸ Stations

- **Enter a "○" for one station for a single solenoid type.**
- **Enter a "○" over two stations for a double solenoid or 3 position type. (See the entry example below.) [For mixed specifications of A/B port sizes, enter C4, C6 or C8 in the ⓐ section.]**

Stations or layout				20	19	18	17	16	15	14	13	12	11	10	9	8	7	6	5	4	3	2	1	Quantity
ⓐ	2 position	Single solenoid																						
		Double solenoid	Refer to the entry example.																					
	3 position	Closed center																						
		Exhaust center																						
		Pressure center																						
	3 port valves	N.C. single																						
		N.C. double																						
		N.O. single																						
		N.O. double																						
	Blanking plate assembly																							
	External pilot specification (Enter only for external pilot)																							
ⓑ	Special specifications	SUP/EXH block assembly																						
ⓒ	SUP block disc																							
	EXH block disc (2 pcs./location)																							

[Entry example]

Stations or layout				6	5	4	3	2	1
ⓐ	2 position	Single solenoid				C4			○
		Double solenoid		C	6		○		

For mixed port sizes

Notes:
- Blanking plate assembly: SX5000-76-2A
- SUP block disc: SX5000-77-1A
- EXH block disc: SX5000-77-1A (2 pcs./location)
- SUP/EXH block assembly (standard): SX5000-51-2A
- SUP/EXH block assembly (R type): SX5000-51-6A
- SUP/EXH block assembly (S type): SX5000-51-7A
- SUP/EXH block assembly (RS type): SX5000-51-8A

For SMC use only

Enter ordered part numbers.

	Part no.	Qty.

	Part no.	Qty.

Order no.	
Clerk (code no.)	
Dept. code	

Note 1) For special specifications of the SUP/EXH block assembly mounting position, list its part number and quantity with the manifold type.
Note 2) Refer to pages 157 and 158 for 3 port valve part numbers.

Copy this page for use as needed.

Date: / /

SY3000: Serial Wiring (Integrated)

Plug-in, DIN Rail Manifold

Manifold Specification Sheet

Customer name	
Contact person	
Specification sheet no.	
Purchase order no.	
Equipment name	
Quantity	set(s) Required date

Follow procedures ① through ③.

❶ Manifold Type

Enter the symbols for required specifications in the boxes below.

SS5Y3-45S □ — □ □ □ — □ — □

SI unit type

O	Without SI unit
A	General purpose type: Series EX300
B	MELSECNET/MINI-S3
C	SYSBUS
D	Satellite I/O Link
E	MEWNET-F
F1	Uni-wire (16 outputs)
G	Allen-Bradley Remote I/O
H	Uni-wire H System
J1	S-Link (16 outputs)
J2	S-Link (8 outputs)
K	T Link Mini
Q	DeviceNet
R1	CompoBus/S (16 outputs)
R2	CompoBus/S (8 outputs)
U	JEMANET
V	CC-Link

Note 1) With general purpose types, a transmission unit is required on the CPU side.
Note 2) Even without an SI unit, the length of the DIN rail can accommodate an SI unit.
Note 3) Refer to pages 146 through 148 for SI unit specifications.
Note 4) Refer to page 229 for the full descriptions for SI unit type.

Stations

Symbol	Stations	Note
02	2 stations	Single wiring specification (Up to 16 solenoids applicable)
⋮	⋮	
16	16 stations	

Note 1) For "J2" and "R2" SI units with 8 outputs, up to 8 solenoids are applicable.
Note 2) Includes the number of blanking plate assemblies.
Note 3) Two stations are required for valves other than single solenoid, because they are dual body type.

Option

When a DIN rail longer than the specified stations is necessary, indicate the number of required stations. (Max. 20 stations)

SUP/EXH block assembly specification

Symbol	Specification
Nil	Standard/Internal pilot
R*	External pilot
S*	Internal pilot/Built-in silencer
RS*	External pilot/Built-in silencer

Note) An asterisk (*) indicates order made products.

A/B port size

Symbol	Specification
C4	ø4 One-touch fitting
C6	ø6 One-touch fitting
M	Mixed

Note) For mixed mounting, indicate C4 or C6 instead of "○" in the station table.

SUP/EXH block assembly mounting position

Symbol	Mounting position	Applicable stations
U	U side	2 to 10 stations
D	D side	
B	Both sides	2 to 16 stations
M	Special specifications	

* For special specifications, indicate in the station table below.

❷ Valve Type

Enter the symbols for required specifications as indicated below.

SY3 * * * * — 5 F U □

Rated voltage

24VDC

Ⓐ

Type of actuation/Body option

140	2 position single solenoid	Standard
245	2 position double solenoid	Dual body type
345	3 position closed center	
445	3 position exhaust center	
545	3 position pressure center	

Indicate in the station table below.

Pilot type

Nil	Internal pilot
R	External pilot

When using an external pilot valve, enter a "○" in the appropriate box for "External Pilot Specification".

Ⓐ Manual override

Nil	Non-locking push type
D	Push-turn locking slotted type
E	Push-turn locking lever type

(Maximum number of valves: 16 stations
However, up to 16 solenoids are applicable.)

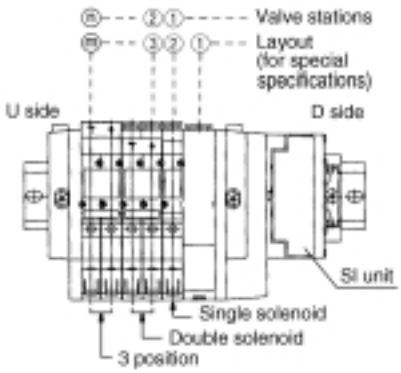

❸ Stations

- **Enter a "○" for one station for a single solenoid type.**
- **Enter a "○" over two stations for a double solenoid or 3 position type.**

Stations or layout																									Quantity
ⓐ 5 port valves	2 position	Single solenoid																							
		Double solenoid																							
	3 position	Closed center																							
		Exhaust center																							
		Pressure center																							
3 port valves	N.C. single																								
	N.C. double																								
	N.O. single																								
	N.O. double																								
Blanking plate assembly																									
External pilot specification (Enter only for external pilot)																									
ⓑ Special specifications	SUP/EXH block assembly																								
ⓒ SUP block disc																									
EXH block disc (2 pcs./location)																									

Notes:
- Blanking plate assembly: SX3000-75-2A
- SUP block disc: SX3000-77-1A
- EXH block disc: SX3000-77-1A (2 pcs./location)
- SUP/EXH block assembly (standard): SX3000-51-2A
- SUP/EXH block assembly (R type): SX3000-51-6A
- SUP/EXH block assembly (S type): SX3000-51-7A
- SUP/EXH block assembly (RS type): SX3000-51-8A

For SMC use only

Enter ordered part numbers.

	Part no.	Qty.

	Part no.	Qty.

Order no.	
Clerk (code no.)	
Dept. code	

Note 1) For special specifications of the SUP/EXH block assembly mounting position, list its part number and quantity with the manifold type.
Note 2) Refer to pages 157 and 158 for 3 port valve part numbers.

Copy this page for use as needed.

Date: / /

SY5000: Serial Wiring (Integrated)

Plug-in, DIN Rail Manifold

Manifold Specification Sheet

Customer name	
Contact person	
Specification sheet no.	
Purchase order no.	
Equipment name	
Quantity	set(s) Required date

Follow procedures ① through ③.

❶ Manifold Type

Enter the symbols for required specifications in the boxes below.

SS5Y5-45S □ — □ □ □ — □ — □

Option
When a DIN rail longer than the specified stations is necessary, indicate the number of required stations. (Max. 20 stations)

SI unit type

O	Without SI unit
A	General purpose type: Series EX300
B	MELSECNET/MINI-S3
C	SYSBUS
D	Satellite I/O Link
E	MEWNET-F
F1	Uni-wire (16 outputs)
G	Allen-Bradley Remote I/O
H	Uni-wire H System
J1	S-Link (16 outputs)
J2	S-Link (8 outputs)
K	T Link Mini
Q	DeviceNet
R1	CompoBus/S (16 outputs)
R2	CompoBus/S (8 outputs)
U	JEMANET
V	CC-Link

Note 1) With general purpose types, a transmission unit is required on the CPU side.
Note 2) Even without an SI unit, the length of the DIN rail can accommodate an SI unit.
Note 3) Refer to pages 146 through 148 for SI unit specifications.
Note 4) Refer to page 229 for the full descriptions for SI unit type.

Stations

Symbol	Stations	Note
02	2 stations	Single wiring specification (Up to 16 solenoids applicable)
⋮	⋮	
16	16 stations	

Note 1) For "J2" and "R2" SI units with 8 outputs, up to 8 solenoids are applicable.
Note 2) Includes the number of blanking plate assemblies.
Note 3) Two stations are required for valves other than single solenoid, because they are dual body type.

SUP/EXH block assembly specification

Symbol	Specification
Nil	Standard/Internal pilot
R*	External pilot
S*	Internal pilot/Built-in silencer
RS*	External pilot/Built-in silencer

Note) An asterisk (*) indicates order made products.

A/B port size

Symbol	Specification
C4	ø4 One-touch fitting
C6	ø6 One-touch fitting
C8	ø8 One-touch fitting
M	Mixed

Note) For mixed mounting, indicate C4, C6 or C8 instead of "○" in the station table.

SUP/EXH block assembly mounting position

Symbol	Mounting position	Applicable stations
U	U side	2 to 10 stations
D	D side	
B	Both sides	2 to 16 stations
M	Special specifications	

* For special specifications, indicate in the station table below.

❷ Valve Type

Enter the symbols for required specifications as indicated below.

SY5 * * * * — 5 F U □ Ⓐ

Rated voltage
24VDC

Type of actuation/Body option

140	2 position single solenoid	Standard
245	2 position double solenoid	Dual body type
345	3 position closed center	
445	3 position exhaust center	
545	3 position pressure center	

Indicate in the station table below.

Pilot type

Nil	Internal pilot
R	External pilot

When using an external pilot valve, enter a "○" in the appropriate box for "External Pilot Specification".

Ⓐ Manual override

Nil	Non-locking push type
D	Push-turn locking slotted type
E	Push-turn locking lever type

(Maximum number of valves: 16 stations
However, up to 16 solenoids are applicable.)

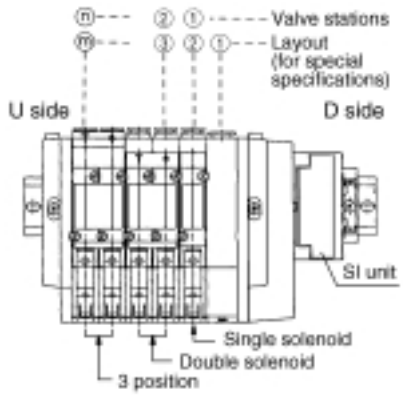

❸ Stations

- **Enter a "○" for one station for a single solenoid type.**
- **Enter a "○" over two stations for a double solenoid or 3 position type.**

Stations or layout																									Quantity
ⓐ 5 port valves 2 position	Single solenoid																								
	Double solenoid																								
3 position	Closed center																								
	Exhaust center																								
	Pressure center																								
3 port valves	N.C. single																								
	N.C. double																								
	N.O. single																								
	N.O. double																								
Blanking plate assembly																									
External pilot specification (Enter only for external pilot)																									
ⓑ Special specifications	SUP/EXH block assembly																								
ⓒ SUP block disc																									
EXH block disc (2 pcs./location)																									

Notes:
- Blanking plate assembly: SX5000-76-2A
- SUP block disc: SX5000-77-1A
- EXH block disc: SX5000-77-1A (2 pcs./location)
- SUP/EXH block assembly (standard): SX5000-51-2A
- SUP/EXH block assembly (R type): SX5000-51-6A
- SUP/EXH block assembly (S type): SX5000-51-7A
- SUP/EXH block assembly (RS type): SX5000-51-8A

For SMC use only

Enter ordered part numbers.

	Part no.	Qty.

	Part no.	Qty.

Order no.	
Clerk (code no.)	
Dept. code	

Note 1) For special specifications of the SUP/EXH block assembly mounting position, list its part number and quantity with the manifold type.
Note 2) Refer to pages 157 and 158 for 3 port valve part numbers.

Copy this page for use as needed.

Date: / /

Customer name	
Contact person	
Specification sheet no.	
Purchase order no.	
Equipment name	
Quantity	set(s) Required date

SY3000: Serial Wiring (Separated)

Plug-in, DIN Rail Manifold

Manifold Specification Sheet

Follow procedures ① through ③.

① Manifold Type

Enter the symbols for required specifications in the boxes below.

SS5Y3-45S1 □ □ — □ □ □ — □ — □

SI unit type

O	Without SI unit
A	General purpose type: Series EX300
B	MELSECNET/MINI-S3
C	SYSBUS
D	Satellite I/O Link
E	MEWNET-F
F1	Uni-wire (16 outputs)
G	Allen-Bradley Remote I/O
H	Uni-wire H System
J1	S-Link (16 outputs)
J2	S-Link (8 outputs)
K	T Link Mini
Q	DeviceNet
R1	CompoBus/S (16 outputs)
R2	CompoBus/S (8 outputs)
U	JEMANET
V	CC-Link

Note 1) With general purpose types, a transmission unit is required on the CPU side.

Note 2) Even without an SI unit, the length of the DIN rail can accommodate an SI unit. If a shorter length for the DIN rail is desired (same as type 45□), add "0" for option at the end of the part number.

Note 3) Refer to pages 146 through 148 for SI unit specifications.

Note 4) Refer to page 229 for the full descriptions for SI unit type.

Stations

Symbol	Stations	Note
02	2 stations	Single wiring specification (Up to 16 solenoids applicable)
⋮	⋮	
16	16 stations	

Note 1) Includes the number of blanking plate assemblies.

Note 2) Two stations are required for valves other than single solenoid, because they are dual body type.

SUP/EXH block assembly specification

Symbol	Specification
Nil	Standard/Internal pilot
R*	External pilot
S*	Internal pilot/Built-in silencer
RS*	External pilot/Built-in silencer

Note) An asterisk (*) indicates order made products.

SI unit mounting position

Symbol	Mounting position
U	U side
D	D side

Option

When a DIN rail longer than the specified stations is necessary, indicate the number of required stations. (Max. 20 stations)

A/B port size

Symbol	Specification
C4	ø4 One-touch fitting
C6	ø6 One-touch fitting
M	Mixed

Note) For mixed mounting, indicate C4 or C6 instead of "○" in the station table.

SUP/EXH block assembly mounting position

Symbol	Mounting position	Applicable stations
U	U side	2 to 10 stations
D	D side	
B	Both sides	2 to 16 stations
M	Special specifications	

* For special specifications, indicate in the station table below.

② Valve Type

Enter the symbols for required specifications as indicated below.

SY3 * * * * — **5 F U** □ Ⓐ

Maximum number of valves: 16 stations
However, up to 16 solenoids are applicable.

Type of actuation/Body option

140	2 position single solenoid	Standard
245	2 position double solenoid	Dual body type
345	3 position closed center	
445	3 position exhaust center	
545	3 position pressure center	

Indicate in the station table below.

Rated voltage

24VDC

Pilot type

Nil	Internal pilot
R	External pilot

When using an external pilot valve, enter a "○" in the appropriate box for "External Pilot Specification".

Ⓐ Manual override

Nil	Non-locking push type
D	Push-turn locking slotted type
E	Push-turn locking lever type

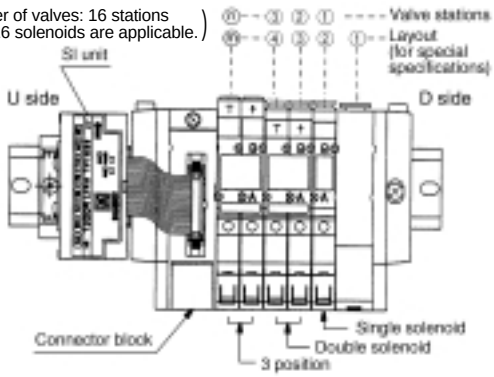

Note) The connector block is not included with the stations or layout.

③ Stations

- **Enter a "○" for one station for a single solenoid type.**
- **Enter a "○" over two stations for a double solenoid or 3 position type. (See the entry example below.)**

Stations or layout																									Quantity
								16	15	14	13	12	11	10	9	8	7	6	5	4	3	2	1		
ⓐ	2 position	Single solenoid																							
		Double solenoid	Refer to the entry example.																						
	3 position	Closed center																							
		Exhaust center																							
		Pressure center																							
	3 port valves	N.C. single																							
		N.C. double																							
		N.O. single																							
		N.O. double																							
	Blanking plate assembly																								
	External pilot specification (Enter only for external pilot)																								
ⓑ	Special specifications	SUP/EXH block assembly																							
ⓒ	SUP block disc																								
	EXH block disc (2 pcs./location)																								

[Entry example]

Stations or layout			6	5	4	3	2	1
ⓐ	2 position	Single solenoid			C4			○
		Double solenoid	C	6		○		

For mixed port sizes

Notes:
- Blanking plate assembly: SX3000-75-2A
- SUP block disc: SX3000-77-1A
- EXH block disc: SX3000-77-1A (2 pcs./location)
- SUP/EXH block assembly (standard): SX3000-51-2A
- SUP/EXH block assembly (R type): SX3000-51-6A
- SUP/EXH block assembly (S type): SX3000-51-7A
- SUP/EXH block assembly (RS type): SX3000-51-8A

For SMC use only

Enter ordered part numbers.

	Part no.	Qty.

	Part no.	Qty.

Order no.	
Clerk (code no.)	
Dept. code	

Note 1) For special specifications of the SUP/EXH block assembly mounting position, list its part number and quantity with the manifold type.

Note 2) Refer to pages 157 and 158 for 3 port valve part numbers.

SMC

Copy this page for use as needed.

Date: / /

SY5000: Serial Wiring (Separated)

Plug-in, DIN Rail Manifold

Customer name	
Contact person	
Specification sheet no.	
Purchase order no.	
Equipment name	
Quantity	set(s) Required date

Manifold Specification Sheet

Follow procedures ① through ③.

❶ Manifold Type

Enter the symbols for required specifications in the boxes below.

SS5Y5-45S1 □ □ — □ □ □ — □ — □

SI unit type

O	Without SI unit
A	General purpose type: Series EX300
B	MELSECNET/MINI-S3
C	SYSBUS
D	Satellite I/O Link
E	MEWNET-F
F1	Uni-wire (16 outputs)
G	Allen-Bradley Remote I/O
H	Uni-wire H System
J1	S-Link (16 outputs)
J2	S-Link (8 outputs)
K	T Link Mini
Q	DeviceNet
R1	CompoBus/S (16 outputs)
R2	CompoBus/S (8 outputs)
U	JEMANET
V	CC-Link

Note 1) With general purpose types, a transmission unit is required on the CPU side.
Note 2) Even without an SI unit, the length of the DIN rail can accommodate an SI unit. If a shorter length for the DIN rail is desired (same as type 45□), add "0" for option at the end of the part number.
Note 3) Refer to pages 146 through 148 for SI unit specifications.
Note 4) Refer to page 229 for the full descriptions for SI unit type.

Stations

Symbol	Stations	Note
02	2 stations	Single wiring specification (Up to 16 solenoids applicable)
⋮	⋮	
16	16 stations	

Note 1) Includes the number of blanking plate assemblies.
Note 2) Two stations are required for valves other than single solenoid, because they are dual body type.

SUP/EXH block assembly specification

Symbol	Specification
Nil	Standard/Internal pilot
R*	External pilot
S*	Internal pilot/Built-in silencer
RS*	External pilot/Built-in silencer

Note) An asterisk (*) indicates order made products.

Option

When a DIN rail longer than the specified stations is necessary, indicate the number of required stations. (Max. 20 stations)

A/B port size

Symbol	Specification
C4	ø4 One-touch fitting
C6	ø6 One-touch fitting
C8	ø8 One-touch fitting
M	Mixed

Note) For mixed mounting, indicate C4, C6 or C8 instead of "○" in the station table.

SI unit mounting position

Symbol	Mounting position
U	U side
D	D side

SUP/EXH block assembly mounting position

Symbol	Mounting position	Applicable stations
U	U side	2 to 10 stations
D	D side	
B	Both sides	2 to 16 stations
M	Special specifications	

* For special specifications, indicate in the station table below.

❷ Valve Type

Enter the symbols for required specifications as indicated below.

SY5 * * * * — 5 F U □ Ⓐ

Type of actuation/Body option

140	2 position single solenoid	Standard
245	2 position double solenoid	Dual body type
345	3 position closed center	
445	3 position exhaust center	
545	3 position pressure center	

Indicate in the station table below.

Rated voltage

24VDC

Pilot type

Nil	Internal pilot
R	External pilot

When using an external pilot valve, enter a "○" in the appropriate box for "External Pilot Specification".

Ⓐ Manual override

Nil	Non-locking push type
D	Push-turn locking slotted type
E	Push-turn locking lever type

(Maximum number of valves: 16 stations
However, up to 16 solenoids are applicable.)

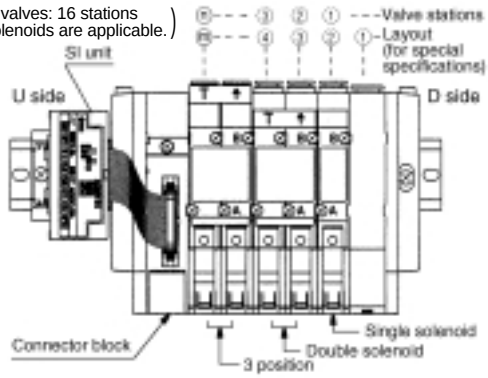

Note) The connector block is not included with the stations or layout.

❸ Stations

- **Enter a "○" for one station for a single solenoid type.**
- **Enter a "○" over two stations for a double solenoid or 3 position type. (See the entry example below.)**

Stations or layout				16	15	14	13	12	11	10	9	8	7	6	5	4	3	2	1	Quantity
ⓐ 2 position	Single solenoid																			
	Double solenoid	Refer to the entry example.																		
ⓐ 3 position	Closed center																			
	Exhaust center																			
	Pressure center																			
ⓐ 3 port valves	N.C. single																			
	N.C. double																			
	N.O. single																			
	N.O. double																			
ⓐ Blanking plate assembly																				
ⓐ External pilot specification (Enter only for external pilot)																				
ⓑ Special specifications	SUP/EXH block assembly																			
ⓒ SUP block disc																				
ⓒ EXH block disc (2 pcs./location)																				

[Entry example]

Stations or layout			6	5	4	3	2	1
ⓐ 2 position	Single solenoid				C6			○
	Double solenoid		C	8		○		

For mixed port sizes

Notes:
- Blanking plate assembly: SX5000-76-2A
- SUP block disc: SX5000-77-1A
- EXH block disc: SX5000-77-1A (2 pcs./location)
- SUP/EXH block assembly (standard): SX5000-51-2A
- SUP/EXH block assembly (R type): SX5000-51-6A
- SUP/EXH block assembly (S type): SX5000-51-7A
- SUP/EXH block assembly (RS type): SX5000-51-8A

For SMC use only

Enter ordered part numbers.

	Part no.	Qty.

	Part no.	Qty.

Order no.	
Clerk (code no.)	
Dept. code	

Note 1) For special specifications of the SUP/EXH block assembly mounting position, list its part number and quantity with the manifold type.
Note 2) Refer to pages 157 and 158 for 3 port valve part numbers.

Copy this page for use as needed.

Order Made

Date: / /

Customer name	
Contact person	
Specification sheet no.	
Purchase order no.	
Equipment name	
Quantity	set(s) Required date

SY3000: For Serial IN313

Plug-in, DIN Rail Manifold

Manifold Specification Sheet

Follow procedures ① through ④.

① Manifold Type

Enter the symbols for required specifications in the boxes below.

SS5Y3-45S2 □ — □ □ □ — □ □

SI unit mounting position

Symbol	Mounting position
U	U side
D	D side

SUP/EXH block assembly mounting position

Symbol	Mounting position	Applicable stations
U	U side	2 to 10 stations
D	D side	
B	Both sides	2 to 16 stations
M	Special specifications	

∗For special specifications, indicate in the station table below.

A/B port size

Symbol	Specification
C4	ø4 One-touch fitting
C6	ø6 One-touch fitting
M	Mixed

Note) For mixed mounting, indicate C4 or C6 instead of "○" in the station table.

Option

When a DIN rail longer than the specified stations is necessary, indicate the number of required stations. (Max. 20 stations)

Stations

Symbol	Stations	Note
02	2 stations	Single wiring specification (Up to 16 solenoids applicable)
⋮	⋮	
16	16 stations	

Note 1) Includes the number of blanking plate assemblies.

Note 2) Two stations are required for valves other than single solenoid, because they are dual body type.

SUP/EXH block assembly specification

Symbol	Specification
Nil	Standard/Internal pilot
R*	External pilot
S*	Internal pilot/Built-in silencer
RS*	External pilot/Built-in silencer

Note) An asterisk (∗) indicates order made products.

④ Applicable SI Unit

IN313 — □

Compatible manufacturer

MB1	Mitsubishi Electric Corporation
TA1	OMRON Corporation
FU1	Fuji Electric Co., Ltd.
SH1	SHARP Corporation
TY1 / TY2	Toyoda machinery
PA1	Matsushita Electric Works
HT1	Hitachi, Ltd.
AB1	Rockwell Automation
TS1	Toshiba Corporation

② Valve Type

Enter the symbols for required specifications as indicated below.

SY3 ∗∗∗ ∗ — 5 F U □

Rated voltage
24VDC

Ⓐ

Type of actuation/Body option

140	2 position single solenoid	Standard
245	2 position double solenoid	Dual body type
345	3 position closed center	
445	3 position exhaust center	
545	3 position pressure center	

Indicate in the station table below.

Pilot type

Nil	Internal pilot
R	External pilot

When using an external pilot valve, enter a "○" in the appropriate box for "External Pilot Specification".

Ⓐ Manual override

Nil	Non-locking push type
D	Push-turn locking slotted type
E	Push-turn locking lever type

(Maximum number of valves: 16 stations
However, up to 16 solenoids are applicable.)

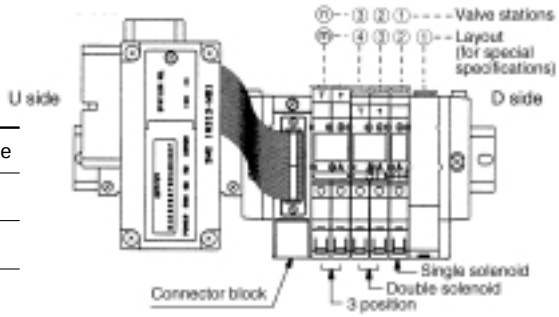

Note) The connector block is not included with the stations or layout.

③ Stations

- **Enter a "○" for one station for a single solenoid type.**
- **Enter a "○" over two stations for a double solenoid or 3 position type. (See the entry example below.)**

Stations or layout				16	15	14	13	12	11	10	9	8	7	6	5	4	3	2	1	Quantity
ⓐ 2 position	Single solenoid																			
	Double solenoid																			
3 position	Closed center	Refer to the entry example.																		
	Exhaust center																			
	Pressure center																			
3 port valves	N.C. single																			
	N.C. double																			
	N.O. single																			
	N.O. double																			
Blanking plate assembly																				
External pilot specification (Enter only for external pilot)																				
ⓑ Special specifications	SUP/EXH block assembly																			
ⓒ SUP block disc																				
EXH block disc (2 pcs./location)																				

[Entry example]

Stations or layout			6	5	4	3	2	1
ⓐ 2 position	Single solenoid				C4			○
	Double solenoid		C	6		○		

For mixed port sizes

Notes:
- Blanking plate assembly: SX3000-75-2A
- SUP block disc: SX3000-77-1A
- EXH block disc: SX3000-77-1A (2 pcs./location)
- SUP/EXH block assembly (standard): SX3000-51-2A
- SUP/EXH block assembly (R type): SX3000-51-6A
- SUP/EXH block assembly (S type): SX3000-51-7A
- SUP/EXH block assembly (RS type): SX3000-51-8A

For SMC use only

Enter ordered part numbers.

	Part no.	Qty.

	Part no.	Qty.

Order no.	
Clerk (code no.)	
Dept. code	

Note 1) For special specifications of the SUP/EXH block assembly mounting position, list its part number and quantity with the manifold type.
Note 2) Refer to pages 157 and 158 for 3 port valve part numbers.
Note 3) List the SI unit part number.

SMC

Copy this page for use as needed.

Order Made

Date: / /

SY5000: For Serial IN313

Plug-in, DIN Rail Manifold

Manifold Specification Sheet

Customer name	
Contact person	
Specification sheet no.	
Purchase order no.	
Equipment name	
Quantity	set(s) Required date

Follow procedures ① through ④.

❶ Manifold Type

Enter the symbols for required specifications in the the boxes below.

SS5Y5-45S2 □ — □ □ □ — □ □

SI unit mounting position

Symbol	Mounting position
U	U side
D	D side

SUP/EXH block assembly mounting position

Symbol	Mounting position	Applicable stations
U	U side	2 to 10 stations
D	D side	
B	Both sides	2 to 16 stations
M	Special specifications	

* For special specifications, indicate in the station table below.

A/B port size

Symbol	Specification
C4	ø4 One-touch fitting
C6	ø6 One-touch fitting
C8	ø8 One-touch fitting
M	Mixed

Note) For mixed mounting, indicate C4, C6 or C8 instead of "○" in the station table.

Option

When a DIN rail longer than the specified stations is necessary, indicate the number of required stations. (Max. 20 stations)

Stations

Symbol	Stations	Note
02	2 stations	Single wiring specification (Up to 16 solenoids applicable)
⋮	⋮	
16	16 stations	

Note 1) Includes the number of blanking plate assemblies.
Note 2) Two stations are required for valves other than single solenoid, because they are dual body type.

SUP/EXH block assembly specification

Symbol	Specification
Nil	Standard/Internal pilot
R*	External pilot
S*	Internal pilot/Built-in silencer
RS*	External pilot/Built-in silencer

Note) An asterisk (*) indicates order made products.

❹ Applicable SI Unit

IN313 — □

Compatible manufacturer

MB1	Mitsubishi Electric Corporation
TA1	OMRON Corporation
FU1	Fuji Electric Co., Ltd.
SH1	SHARP Corporation
TY1	Toyoda machinery
TY2	
PA1	Matsushita Electric Works
HT1	Hitachi, Ltd.
AB1	Rockwell Automation
TS1	Toshiba Corporation

❷ Valve Type

Enter the symbols for required specifications as indicated below.

SY5 * * * * — 5 F U □

Rated voltage
24VDC

Ⓐ

Type of actuation/Body option

140	2 position single solenoid	Standard
245	2 position double solenoid	Dual body type
345	3 position closed center	
445	3 position exhaust center	
545	3 position pressure center	

Indicate in the station table below.

Pilot type

Nil	Internal pilot
R	External pilot

When using an external pilot valve, enter a "○" in the appropriate box for "External Pilot Specification".

Ⓐ Manual override

Nil	Non-locking push type
D	Push-turn locking slotted type
E	Push-turn locking lever type

(Maximum number of valves: 16 stations
However, up to 16 solenoids are applicable.)

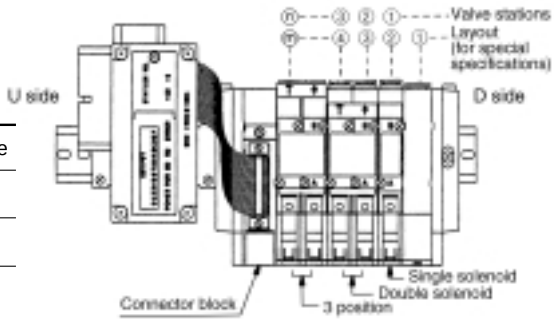

Note) The connector block is not included with the stations or layout.

❸ Stations

- **Enter a "○" for one station for a single solenoid type.**
- **Enter a "○" over two stations for a double solenoid or 3 position type. (See the entry example below.)**

	Stations or layout																							Quantity
							16	15	14	13	12	11	10	9	8	7	6	5	4	3	2	1		
ⓐ	2 position	Single solenoid																						
		Double solenoid																						
	3 position	Closed center	Refer to the entry example.																					
		Exhaust center																						
		Pressure center																						
	3 port valves	N.C. single																						
		N.C. double																						
		N.O. single																						
		N.O. double																						
	Blanking plate assembly																							
	External pilot specification (Enter only for external pilot)																							
ⓑ	Special specifications	SUP/EXH block assembly																						
ⓒ	SUP block disc																							
	EXH block disc (2 pcs./location)																							

[Entry example]

	Stations or layout		6	5	4	3	2	1
ⓐ	2 position	Single solenoid			C6			○
		Double solenoid	C	8		⦶		

For mixed port sizes

Notes:
- Blanking plate assembly: SX5000-76-2A
- SUP block disc: SX5000-77-1A
- EXH block disc: SX5000-77-1A (2 pcs./location)
- SUP/EXH block assembly (standard): SX5000-51-2A
- SUP/EXH block assembly (R type): SX5000-51-6A
- SUP/EXH block assembly (S type): SX5000-51-7A
- SUP/EXH block assembly (RS type): SX5000-51-8A

For SMC use only

Enter ordered part numbers.

	Part no.	Qty.

	Part no.	Qty.

Order no.	
Clerk (code no.)	
Dept. code	

Note 1) For special specifications of the SUP/EXH block assembly mounting position, list its part number and quantity with the manifold type.
Note 2) Refer to pages 157 and 158 for 3 port valve part numbers.
Note 3) List the SI unit part number.

Copy this page for use as needed.

Order Made

Date: / /

SY3000: For Serial, OMRON Transmission Unit (G71-OD16)

Plug-in, DIN Rail Manifold

Manifold Specification Sheet

Customer name			
Contact person			
Specification sheet no.			
Purchase order no.			
Equipment name			
Quantity	set(s)	Required date	

Follow procedures ① through ③.

① Manifold Type

Enter the symbols for required specifications in the boxes below.

SS5Y3-45S3 □ □ — □ □ □ — □ — □

Option
When a DIN rail longer than the specified stations is necessary, indicate the number of required stations. (Max. 20 stations)

Specification

Nil	With transmission unit
0	Without transmission unit

Transmission unit mounting position

Symbol	Mounting position
U	U side
D	D side

Stations

Symbol	Stations	Note
02	2 stations	Single wiring specification (Up to 16 solenoids applicable)
⋮	⋮	
16	16 stations	

Note 1) Includes the number of blanking plate assemblies.
Note 2) Two stations are required for valves other than single solenoid, because they are dual body type.

SUP/EXH block assembly mounting position

Symbol	Mounting position	Applicable stations
U	U side	2 to 10 stations
D	D side	
B	Both sides	2 to 16 stations
M	Special specifications	

∗For special specifications, indicate in the station table below.

SUP/EXH block assembly specification

Symbol	Specification
Nil	Standard/Internal pilot
R∗	External pilot
S∗	Internal pilot/Built-in silencer
RS∗	External pilot/Built-in silencer

Note) An asterisk (∗) indicates order made products.

A/B port size

Symbol	Specification
C4	ø4 One-touch fitting
C6	ø6 One-touch fitting
M	Mixed

Note) For mixed mounting, indicate C4 or C6 instead of "○" in the station table.

② Valve Type

Enter the symbols for required specifications as indicated below.

SY3 ∗∗∗ ∗ — 5 F U □

Type of actuation/Body option

140	2 position single solenoid	Standard
245	2 position double solenoid	Dual body type
345	3 position closed center	
445	3 position exhaust center	
545	3 position pressure center	

Indicate in the station table below.

Rated voltage
DC24V

Pilot type

Nil	Internal pilot
R	External pilot

When using an external pilot valve, enter a "○" in the appropriate box for "External Pilot Specification".

Ⓐ **Manual override**

Nil	Non-locking push type
D	Push-turn locking slotted type
E	Push-turn locking lever type

(Maximum number of valves: 16 stations
However, up to 16 solenoids are applicable.)

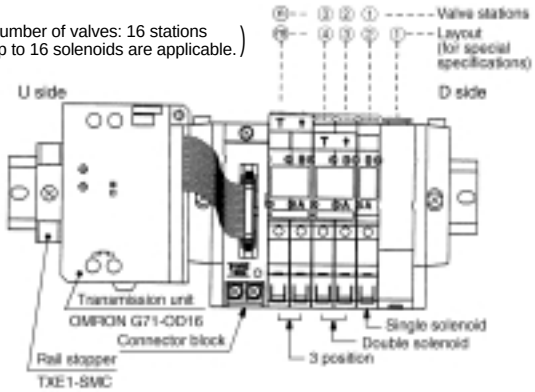

Note) The connector block is not included with the stations or layout.

③ Stations

- **Enter a "○" for one station for a single solenoid type.**
- **Enter a "○" over two stations for a double solenoid or 3 position type. (See the entry example below.)**

Stations or layout				16	15	14	13	12	11	10	9	8	7	6	5	4	3	2	1	Quantity
ⓐ	2 position	Single solenoid																		
		Double solenoid	Refer to the entry example.																	
	3 position	Closed center																		
		Exhaust center																		
		Pressure center																		
	3 port valves	N.C. single																		
		N.C. double																		
		N.O. single																		
		N.O. double																		
	Blanking plate assembly																			
	External pilot specification (Enter only for external pilot)																			
ⓑ	Special specifications	SUP/EXH block assembly																		
ⓒ	SUP block disc																			
	EXH block disc (2 pcs./location)																			

[Entry example]

Stations or layout			6	5	4	3	2	1
ⓐ	2 position	Single solenoid			C4			○
		Double solenoid	C	6			○	

For mixed port sizes

Notes:
- Blanking plate assembly: SX3000-75-2A
- SUP block disc: SX3000-77-1A
- EXH block disc: SX3000-77-1A (2 pcs./location)
- SUP/EXH block assembly (standard): SX3000-51-2A
- SUP/EXH block assembly (R type): SX3000-51-6A
- SUP/EXH block assembly (S type): SX3000-51-7A
- SUP/EXH block assembly (RS type): SX3000-51-8A

For SMC use only

Enter ordered part numbers.

	Part no.	Qty.

	Part no.	Qty.

Order no.	
Clerk (code no.)	
Dept. code	

Note 1) For special specifications of the SUP/EXH block assembly mounting position, list its part number and quantity with the manifold type.
Note 2) Refer to pages 157 and 158 for 3 port valve part numbers.

Copy this page for use as needed.

Order Made

Date: / /

SY5000: For Serial, OMRON Transmission Unit (G71-OD16)

Plug-in, DIN Rail Manifold

Manifold Specification Sheet

Customer name			
Contact person			
Specification sheet no.			
Purchase order no.			
Equipment name			
Quantity	set(s)	Required date	

Follow procedures ① through ③.

❶ Manifold Type

Enter the symbols for required specifications in the boxes below.

SS5Y5-45S3 □ □ — □ □ □ — □ □

Option
When a DIN rail longer than the specified stations is necessary, indicate the number of required stations. (Max. 20 stations)

Specification

Nil	With transmission unit
0	Without transmission unit

Transmission unit mounting position

Symbol	Mounting position
U	U side
D	D side

Stations

Symbol	Stations	Note
02	2 stations	Single wiring specification (Up to 16 solenoids applicable)
⋮	⋮	
16	16 stations	

Note 1) Includes the number of blanking plate assemblies.
Note 2) Two stations are required for valves other than single solenoid, because they are dual body type.

SUP/EXH block assembly mounting position

Symbol	Mounting position	Applicable stations
U	U side	2 to 10 stations
D	D side	
B	Both sides	2 to 16 stations
M	Special specifications	

∗For special specifications, indicate in the station table below.

SUP/EXH block assembly specification

Symbol	Specification
Nil	Standard/Internal pilot
R∗	External pilot
S∗	Internal pilot/Built-in silencer
RS∗	External pilot/Built-in silencer

Note) An asterisk (∗) indicates order made products.

A/B port size

Symbol	Specification
C4	ø4 One-touch fitting
C6	ø6 One-touch fitting
C8	ø8 One-touch fitting
M	Mixed

Note) For mixed mounting, indicate C4, C6 or C8 instead of "○" in the station table.

❷ Valve Type

Enter the symbols for required specifications as indicated below.

SY5 ∗∗∗ ∗ — 5 F U □ Ⓐ

Type of actuation/Body option

140	2 position single solenoid	Standard
245	2 position double solenoid	Dual body type
345	3 position closed center	
445	3 position exhaust center	
545	3 position pressure center	

Indicate in the station table below.

Rated voltage
DC24V

Pilot type

Nil	Internal pilot
R	External pilot

When using an external pilot valve, enter a "○" in the appropriate box for "External Pilot Specification".

Ⓐ Manual override

Nil	Non-locking push type
D	Push-turn locking slotted type
E	Push-turn locking lever type

(Maximum number of valves: 16 stations
However, up to 16 solenoids are applicable.)

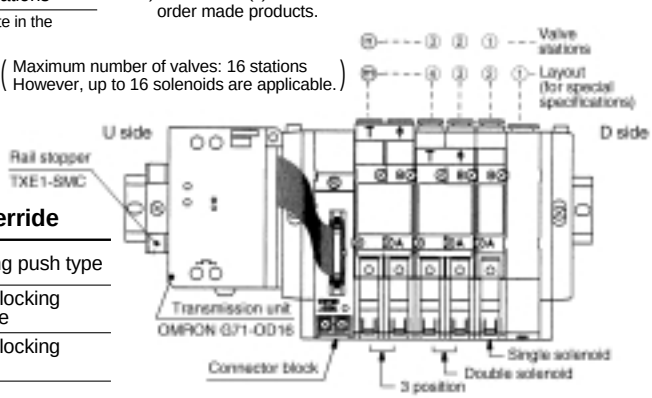

Note) The connector block is not included with the stations or layout.

❸ Stations

- **Enter a "○" for one station for a single solenoid type.**
- **Enter a "○" over two stations for a double solenoid or 3 position type. (See the entry example below.)**

Stations or layout				16	15	14	13	12	11	10	9	8	7	6	5	4	3	2	1	Quantity
ⓐ 2 position	Single solenoid																			
	Double solenoid	Refer to the entry example.																		
ⓐ 3 position	Closed center																			
	Exhaust center																			
	Pressure center																			
ⓐ 3 port valves	N.C. single																			
	N.C. double																			
	N.O. single																			
	N.O. double																			
Blanking plate assembly																				
External pilot specification (Enter only for external pilot)																				
ⓑ Special specifications	SUP/EXH block assembly																			
ⓒ SUP block disc																				
ⓒ EXH block disc (2 pcs./location)																				

[Entry example]

Stations or layout			6	5	4	3	2	1
ⓐ 2 position	Single solenoid				C6			○
	Double solenoid		C	8		○		

For mixed port sizes

Notes:
- Blanking plate assembly: SX5000-76-2A
- SUP block disc: SX5000-77-1A
- EXH block disc: SX5000-77-1A (2 pcs./location)
- SUP/EXH block assembly (standard): SX5000-51-2A
- SUP/EXH block assembly (R type): SX5000-51-6A
- SUP/EXH block assembly (S type): SX5000-51-7A
- SUP/EXH block assembly (RS type): SX5000-51-8A

For SMC use only

Enter ordered part numbers.

	Part no.	Qty.

	Part no.	Qty.

Order no.	
Clerk (code no.)	
Dept. code	

Note 1) For special specifications of the SUP/EXH block assembly mounting position, list its part number and quantity with the manifold type.
Note 2) Refer to pages 157 and 158 for 3 port valve part numbers.

Copy this page for use as needed.

Order Made

Date: / /

SY$^{5}_{3}$000: Non-plug-in

Mixed Mounting DIN Rail Manifold

Manifold Specification Sheet

Customer name	
Contact person	
Specification sheet no.	
Purchase order no.	
Equipment name	
Quantity	set(s) Required date

Follow procedures ① through ③.

① Manifold Type

Enter the symbols for required specifications in the boxes below.

SS5Y5-M45 — [ ] [ ] [ ] — [ ] [ ]

Stations

Symbol	Stations
02	2 stations
⋮	⋮
20	20 stations

∗ Includes the number of blanking plate assemblies.

SUP/EXH block assembly mounting position

Symbol	Mounting position	Applicable stations
U	U side	2 to 10 stations
D	D side	
B	Both sides	2 to 20 stations
M∗	Special specifications	

∗ For special specifications, indicate in the station table below.

SUP/EXH block assembly specification

Symbol	Specification
Nil	Standard/Internal pilot
S∗	Built-in silencer

Note 1) An asterisk (∗) indicates order made products.

Note 2) External pilot is not available for mixed mounting types.

A/B port size (One-touch fitting)

Symbol	Applicable tube size	
	SY5000	SY3000
C44	ø4	ø4
C46	ø4	ø6
C64	ø6	ø4
C66	ø6	ø6
C84	ø8	ø4
C86	ø8	ø6
M	Mixed	

Note) For mixed specifications, instead of a "○", enter C4 or C6 for SY3000 and C4, C6 or C8 for SY5000 in the ⓐ section of the station table below.

Option

Note 1) When a DIN rail longer than the specified stations is necessary, indicate the number of required stations. (Max. 20 stations)

Note 2) For the additional length, a DIN rail for SY5000 will be used.

(Maximum number of valves: 20 stations)

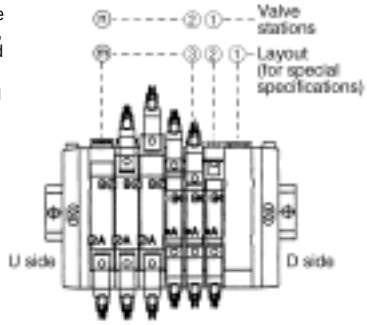

[Notes]

- Blanking plate assembly: SX5000-76-1A (For SY5000)
- Blanking plate assembly: SX3000-75-1A (For SY3000)
- SUP block disc: SX5000-77-1A
- EXH block disc: SX5000-77-1A (2 pcs./location)
- Individual SUP spacer assembly: SY5000-38-2A (For SY5000)
- Individual EXH spacer assembly: SY5000-39-2A (For SY5000)
- Individual SUP spacer assembly: SY3000-38-2A (For SY3000)
- Individual EXH spacer assembly: SY3000-39-2A (For SY3000)
- SUP/EXH block assembly (standard): SX5000-51-1A
- SUP/EXH block assembly (S type): SX5000-51-4A

② Valve Type

Enter the symbols for required specifications as indicated below.

SY $^{5}_{3}$ ∗ 40 — [ ] [ ] [ ] [ ]

Ⓐ Ⓑ Ⓒ Ⓓ

Series

5	SY5000
3	SY3000

Type of actuation

1	2 position single solenoid
2	2 position double solenoid
3	3 position closed center
4	3 position exhaust center
5	3 position pressure center

Indicate in the station table below.

Ⓐ Rated voltage

DC specifications

5	24VDC
6	12VDC
V	6VDC
S	5VDC
R	3VDC

AC specifications (50/60Hz)

1	100VAC
2	200VAC
3	110VAC [115VAC]
4	220VAC [230VAC]

Ⓑ Electrical entry

G	Grommet (lead wire length 300mm)	
H	Grommet (lead wire length 600mm)	
L	L type plug connector	With lead wire
LN		Without lead wire
LO		Without connector
M	M type plug connector	With lead wire
MN		Without lead wire
MO		Without connector

Ⓒ Indicator light/Surge voltage suppressor

Nil	Without indicator light/ surge voltage suppressor	R	With surge voltage suppressor (non-polar)
S	With surge voltage suppressor	U	With indicator light/ surge voltage suppressor (non-polar)
Z	With indicator light/ surge voltage suppressor		

Note 1) For AC, there is no "S" specification, since it is integrated with the rectifier.

Note 2) "R" and "U" are available for DC only.

Ⓓ Manual override

Nil	Non-locking push type
D	Push-turn locking slotted type
E	Push-turn locking lever type

③ Stations

Indicate the layout of valves, etc., with a "○".

Stations or layout																															Quantity
								20	19	18	17	16	15	14	13	12	11	10	9	8	7	6	5	4	3	2	1				
ⓐ SY5000	2 position	Single solenoid																													
		Double solenoid																													
	3 position	Closed center																													
		Exhaust center																													
		Pressure center																													
	3 port valves	N.C. single																													
		N.C. double																													
		N.O. single																													
		N.O. double																													
	Blanking plate assembly																														
ⓐ SY3000	2 position	Single solenoid																													
		Double solenoid																													
	3 position	Closed center																													
		Exhaust center																													
		Pressure center																													
	3 port valves	N.C. single																													
		N.C. double																													
		N.O. single																													
		N.O. double																													
	Blanking plate assembly																														
ⓑ	Special specifications	SUP/EXH block assembly																													
ⓒ	SUP block disc																														
	EXH block disc (2 pcs./location)																														
ⓓ	Options	Individual SUP spacer assembly																													
		Individual EXH spacer assembly																													

For SMC use only

Enter ordered part numbers.

	Part no.	Qty.

	Part no.	Qty.

Order no.	
Clerk (code no.)	
Dept. code	

Note 1) For special specifications of the SUP/EXH block assembly mounting position, list its part number and quantity with the manifold type.

Note 2) Refer to pages 157 and 158 for 3 port valve part numbers.

SMC

Copy this page for use as needed.

Order Made

Date: / /

SY$^{5}_{3}$000: With Connector Box

Mixed Mounting DIN Rail Manifold

Manifold Specification Sheet

Customer name	
Contact person	
Specification sheet no.	
Purchase order no.	
Equipment name	
Quantity	set(s) Required date

Follow procedures ① through ③.

① Manifold Type

Enter the symbols for required specifications in the boxes below.

SS5Y5-M45 — □ □ — □ □ □ — □ — □

Specification

Symbol	Specification
A	With connector box (positive COM)
NA	With connector box (negative COM)

∗ The type of lead wire assemblies included is different.

Connector box mounting position

Symbol	Mounting position
U	U side
D	D side

Stations

Symbol	Stations
02	2 stations
⋮	⋮
20	20 stations

∗ Includes the number of blanking plate assemblies.

SUP/EXH block assembly mounting position

Symbol	Mounting position	Applicable stations
U	U side	2 to 10 stations
D	D side	
B	Both sides	2 to 20 stations
M∗	Special specifications	

∗ For special specifications, indicate in the station table below.

SUP/EXH block assembly specification

Symbol	Specification
Nil	Standard/Internal pilot
S∗	Internal pilot/Built-in silencer

Note) An asterisk (∗) indicates order made products.

A/B port size (One-touch fitting)

Symbol	Applicable tube size	
	SY5000	SY3000
C44	ø4	ø4
C46	ø4	ø6
C64	ø6	ø4
C66	ø6	ø6
C84	ø8	ø4
C86	ø8	ø6
M	Mixed	

Note) For mixed specifications, instead of a "○", enter C4 or C6 for SY3000 and C4, C6 or C8 for SY5000 in the ⓐ section of the station table below.

Option

Note 1) When a DIN rail longer than the specified stations is necessary, indicate the number of required stations. (Max. 20 stations)

Note 2) For the additional length, a DIN rail for SY5000 will be used.

(Maximum number of valves: 20 stations)

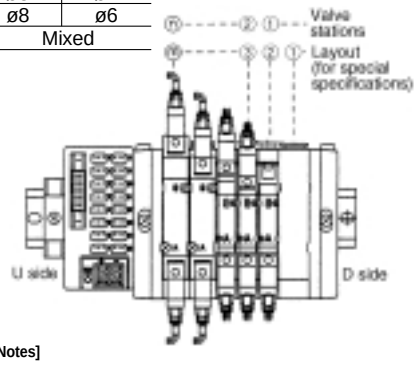

② Valve Type

Enter the symbols for required specifications as indicated below.

SY $^{5}_{3}$ ∗ 40^{R} — 5 LO □ □ (Ⓐ Ⓑ)

Series

5	SY5000
3	SY3000

Type of actuation

1	2 position single solenoid
2	2 position double solenoid
3	3 position closed center
4	3 position exhaust center
5	3 position pressure center

Indicate in the station table below.

Rated voltage 24VDC

L type connector

Ⓐ Indicator light/ Surge voltage suppressor

Nil	Without indicator light/ surge voltage suppressor
S	With surge voltage suppressor
Z	With indicator light/ surge voltage suppressor
U	With indicator light/ surge voltage suppressor (non-polar)

Ⓑ Manual override

Nil	Non-locking push type
D	Push-turn locking slotted type
E	Push-turn locking lever type

[Notes]

- Blanking plate assembly: SX5000-76-1A (For SY5000)
- Blanking plate assembly: SX3000-75-1A (For SY3000)
- SUP block disc: SX5000-77-1A
- EXH block disc: SX5000-77-1A (2 pcs./location)
- Individual SUP spacer assembly: SY5000-38-2A (For SY5000)
- Individual EXH spacer assembly: SY5000-39-2A (For SY5000)
- Individual SUP spacer assembly: SY3000-38-2A (For SY3000)
- Individual EXH spacer assembly: SY3000-39-2A (For SY3000)
- SUP/EXH block assembly (standard): SX5000-51-1A
- SUP/EXH block assembly (S type): SX5000-51-4A

③ Stations

Indicate the layout of valves, etc., with a "○".

Stations or layout								20	19	18	17	16	15	14	13	12	11	10	9	8	7	6	5	4	3	2	1	Quantity
ⓐ	SY5000	2 position	Single solenoid																									
			Double solenoid																									
		3 position	Closed center																									
			Exhaust center																									
			Pressure center																									
		3 port valves	N.C. single																									
			N.C. double																									
			N.O. single																									
			N.O. double																									
		Blanking plate assembly																										
	SY3000	2 position	Single solenoid																									
			Double solenoid																									
		3 position	Closed center																									
			Exhaust center																									
			Pressure center																									
		3 port valves	N.C. single																									
			N.C. double																									
			N.O. single																									
			N.O. double																									
		Blanking plate assembly																										
ⓑ	Special specifications	SUP/EXH block assembly																										
ⓒ	SUP block disc																											
	EXH block disc (2 pcs./location)																											
ⓓ	Options	Individual SUP spacer assembly																										
		Individual EXH spacer assembly																										

For SMC use only

Enter ordered part numbers.

	Part no.	Qty.

	Part no.	Qty.

Order no.	
Clerk (code no.)	
Dept. code	

Note 1) For special specifications of the SUP/EXH block assembly mounting position, list its part number and quantity with the manifold type.

Note 2) Refer to pages 157 and 158 for 3 port valve part numbers.

Compatible SI units

Symbol	SI unit	Manufacturer/Organization
A	EX300	SMC
B	MELSECNET/MINI-S3 Data Link System	Mitsubishi Electric Corporation
C	SYSBUS Wire System	OMRON Corporation
D	Satellite I/O Link System	SHARP Corporation
E	MEWNET-F System	Matsushita Electric Works
F1	Uni-wire System (16 outputs)	NKE Corporation
G	Allen-Bradley Remote I/O System	Rockwell Automation
H	Uni-wire H System	NKE Corporation
J1	S-Link System (16 outputs)	SUNX Corporation
J2	S-Link System (8 outputs)	SUNX Corporation
K	T Link Mini System	Fuji Electric Co., Ltd.
Q	DeviceNet	ODVA
R1	CompoBus/S (16 outputs)	OMRON Corporation
R2	CompoBus/S (8 outputs)	OMRON Corporation
U	JEMANET (JPCN-1)	The Japan Electrical Manufacturer's Association
V	CC-Link System	Mitsubishi Electric Corporation

Series SY3000/5000/7000/9000

Safety Instructions

These safety instructions are intended to prevent a hazardous situation and/or equipment damage. These instructions indicate the level of potential hazard by a label of **"Caution", "Warning" or "Danger"**. To ensure safety, be sure to observe ISO 4414 Note 1), JIS B 8370 Note 2) and other safety practices.

⚠Caution : Operator error could result in injury or equipment damage.

⚠Warning : Operator error could result in serious injury or loss of life.

⚠Danger : In extreme conditions, there is a possible result of serious injury or loss of life.

Note 1) ISO 4414: Pneumatic fluid power – Recommendations for the application of equipment to transmission and control systems.

Note 2) JIS B 8370: General Rules for Pneumatic Equipment

⚠ Warning

1. The compatibility of pneumatic equipment is the responsibility of the person who designs the pneumatic system or decides its specifications.

Since the products specified here are used in various operating conditions, their compatibility for the specific pneumatic system must be based on specifications or after analysis and/or tests to meet your specific requirements.

2. Only trained personnel should operate pneumatically operated machinery and equipment.

Compressed air can be dangerous if an operator is unfamiliar with it. Assembly, handling or repair of pneumatic systems should be performed by trained and experienced operators.

3. Do not service machinery/equipment or attempt to remove components until safety is confirmed.

1. Inspection and maintenance of machinery/equipment should only be performed after confirmation of safe locked-out control positions.
2. When equipment is to be removed, confirm the safety process as mentioned above. Cut the supply pressure for this equipment and exhaust all residual compressed air in the system.
3. Before machinery/equipment is restarted, take measures to prevent shooting-out of cylinder piston rod, etc. (Bleed air into the system gradually to create back pressure.)

4. Contact SMC if the product is to be used in any of the following conditions:

1. Conditions and environments beyond the given specifications, or if product is used outdoors.
2. Installation on equipment in conjunction with atomic energy, railway, air navigation, vehicles, medical equipment, food and beverages, recreation equipment, emergency stop circuits, press applications, or safety equipment.
3. An application which has the possibility of having negative effects on people, property, or animals, requiring special safety analysis.

Series SY3000/5000/7000/9000
3, 5 Port Solenoid Valve Precautions 1

Be sure to read before handling.

Design

⚠Warning

1. Actuator drive

When an actuator, such as a cylinder, is to be driven using a valve, take appropriate measures to prevent potential danger caused by actuator operation.

2. Intermediate stopping

When a 3 position closed center valve is used to stop a cylinder piston at an intermediate position, accurate stopping of the piston in a predetermined position is difficult due to the compressibility of air. Furthermore, since valves and cylinders are not guaranteed for zero air leakage, it may not be possible to hold a stopped position for an extended length of time. Contact SMC if it is necessary to hold a stopped position for an extended time.

3. Effect of back pressure when using a manifold

Use caution when valves are used on a common exhaust manifold, as actuator malfunction due to back pressure may occur. Especially when operating an air operated valve or a single acting cylinder, or using a 3 position exhaust center valve, malfunction may occur due to the exhaust from the other actuators. In cases where there is a danger of back pressure influence, take countermeasures by selecting a valve with back pressure check valve, or using a supply/exhaust block assembly and an EXH block disc, etc.

4. Holding of pressure (including vacuum)

Since valves are subject to air leakage, they cannot be used for applications such as holding pressure (including vacuum) in a pressure vessel.

5. Cannot be used as an emergency shutoff valve, etc.

The valves presented in this catalog are not designed for safety applications such as an emergency shutoff valve. If the valves are used in this type of system, other reliable safety assurance measures should also be adopted.

6. Maintenance space

The installation should allow sufficient space for maintenance activities (removal of valve, etc.).

7. Release of residual pressure

Provide a residual pressure release function for maintenance purposes. Special consideration should be given to the release of residual pressure between the valve and cylinder in the case of a 3 position closed center type valve.

8. Vacuum applications

When a valve is used for vacuum switching, etc., take measures against the suction of external dust or other contaminants from vacuum pads and exhaust ports, etc. Moreover, an external pilot type valve should be used in this case. Contact SMC in case of an internal pilot type.

9. Using double solenoid valves

When newly using double solenoid valves, the actuator may move in an unexpected direction depending on the valve switching position. Take measures to prevent the danger caused by the actuator's movements.

10. Ventilation

When a valve is used inside a sealed control panel, etc., provide ventilation to prevent a pressure increase caused by exhausted air inside the control panel or a temperature increase caused by the heat generated by the valve.

Selection

⚠Warning

1. Confirm the specifications.

The products presented in this catalog are designed only for use in compressed air systems (including vacuum). Do not operate at pressures or temperatures, etc., beyond the range of the specifications, as this can cause damage or malfunction. (Refer to specifications.)
Contact SMC when using a fluid other than compressed air (including vacuum).

2. Extended periods of continuous energization

Use a DC specification or an energy saving type if valves will be continuously energized for extended periods of time, or the energized period will be longer than the de-energized period. Contact SMC regarding other products available for AC specifications.

⚠Caution

1. Momentary energization

If a double solenoid valve will be operated with momentary energization, it should be energized for at least 0.1 second.

However, the cylinder may malfunction depending on the secondary load conditions; therefore, it should be energized until the cylinder reaches the stroke end position.

2. Leakage voltage

Particularly when using a C-R element (surge voltage suppressor) for protection of the switching element, take note that leakage voltage will increase due to leakage current flowing through the C-R element. Therefore, select a circuit or an element in advance

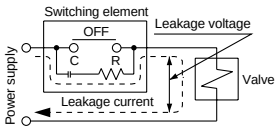

to limit the amount of residual leakage voltage to the values shown below. Also, if return malfunction occurs due to the leakage voltage, install a bleeder resistor. Contact SMC for details on the bleeder resistor.

With DC coil: 3% or less of rated voltage
With AC coil: 8% or less of rated voltage

3. Low temperature operation

Unless otherwise indicated in the specifications for each valve, operation is possible to −10°C, but appropriate measures should be taken to avoid solidification or freezing of drainage and moisture, etc.

4. Operation for air blowing

When using solenoid valves for air blowing, an external pilot type should be used.

Note that the pressure drop caused by the air blowing can have an effect on the internal pilot type valves when internal pilots and external pilots are used on the same manifold.

Furthermore, supply compressed air to the external pilot port within the pressure range prescribed in the specifications, and when using a double solenoid type for air blowing, make sure that it is always energized when air is being blown.

5. Mounting orientation

The mounting orientation is unrestricted.

3, 5 Port Solenoid Valve Precautions 2

Be sure to read before handling.

Mounting

⚠Warning

1. If air leakage increases or equipment does not operate properly, stop operation.

After mounting and maintenance, etc., connect the compressed air and power supplies, and perform appropriate function and leakage tests to confirm that the unit is mounted properly.

2. Instruction manual

Mount and operate the product after reading the manual carefully and understanding its contents. Also keep the manual where it can be referred to as necessary.

3. Painting and coating

Warnings or specifications printed or pasted on the product should not be erased, removed or covered up.

Consult SMC if paint is to be applied to resin parts, as this may have an adverse effect due to the paint solvent.

Piping

⚠Caution

1. Preparation before piping

Before piping is connected, it should be thoroughly blown out with air (flushing) or washed to remove chips, cutting oil and other debris from inside the pipe.

2. Wrapping of pipe tape

When connecting pipes and fittings, etc., be sure that chips from the pipe threads and sealing material do not get inside the valve.

Further, when pipe tape is used, leave 1.5 to 2 thread ridges exposed at the end of the threads.

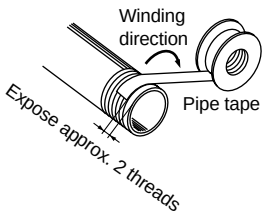

3. When using closed center valves

When using closed center type valves, check carefully to be sure there are no air leaks from the piping between the valves and cylinders.

4. Tightening torques

When connecting fittings to valves, tighten as indicated below.

1) M5 type

1. When using SMC fittings, follow the guidelines below.

M5: After tightening by hand, tighten an additional 1/6 turn with a tightening tool. However, if miniature fittings are used, tighten an additional 1/4 turn with a tightening tool after tightening by hand. For fittings with gaskets in 2 locations, e.g., universal elbow or universal tee, tighten an additional 1/2 turn.

Note) If fittings are over-tightened, air leakage may result due to breaking of fitting threads or deformation of the gaskets. However, if fittings are not tightened sufficiently, loosening of the threads and air leakage and may occur.

2. When fittings other than SMC fittings are used, follow the instructions of the respective fitting manufacturer.

2) Rc threads

Fasten with the proper tightening torques as shown below.

Connection threads	Proper tightening torque N·m
Rc 1/8	7 to 9
Rc 1/4	12 to 14
Rc 3/8	22 to 24
Rc 1/2	28 to 30

5. Connection of piping to products

When connecting piping to a product, refer to its instruction manual to avoid mistakes regarding the supply port, etc.

Wiring

⚠Caution

1. Polarity

When connecting power to a DC specification solenoid valve equipped with (indicator light) surge voltage suppressor, confirm whether or not there is polarity.

If there is polarity, take note of the following points.

- Without built-in diode to protect polarity:

If a mistake is made regarding polarity, the diode in the valve, the control device switching element or power supply equipment, etc., may burn out.

- With diode to protect polarity:

If a mistake is made regarding polarity, it will not be possible to switch the valve.

2. Applied voltage

When electric power is connected to the solenoid valve, be careful to apply the proper voltage. Improper voltage may cause malfunction or burn out the coil.

3. Confirmation of connections

After completing the wiring, confirm that the connections are correct.

4. Handling of pilot valves

Be sure that forces exceeding 20N are not applied to the pilot valves due to lead wire deflection and external forces, as this may cause damage.

Lubrication

⚠Caution

1. Lubrication

1) The valve has been lubricated for life at the factory, and does not require any further lubrication.

2) In the event that it is lubricated, use class 1 turbine oil (without additives), ISO VG32.

However, once lubrication is applied it must be continued, as loss of the original lubricant may lead to malfunction.

Contact SMC regarding class 2 turbine oil (with additives), ISO VG32.

3, 5 Port Solenoid Valve Precautions 3

Be sure to read before handling.

Air Supply

⚠Warning

1. Use clean air.

Do not use compressed air which contains chemicals, synthetic oils containing organic solvents, salts or corrosive gases, etc., as this can cause damage or malfunction.

⚠Caution

1. Install air filters.

Install air filters close to valves at their upstream side. A filtration degree of 5μm or less should be selected.

2. Install an air dryer, after-cooler or water separator, etc.

Air that includes excessive drainage may cause malfunction of valves and other pneumatic equipment. To prevent this, install an air dryer, after-cooler or water separator, etc.

3. If excessive carbon dust is generated, eliminate it by installing mist separators at the upstream side of valves.

If excessive carbon dust is generated by the compressor, it may adhere to the inside of valves and cause malfunction.

Refer to SMC's "Compressed Air Cleaning Systems" catalog for further details on compressed air quality.

Operating Environment

⚠Warning

1. Do not use valves in atmospheres of corrosive gases, chemicals, salt water, water or steam, or where there is direct contact with any of these.

2. Do not use in an explosive atmosphere.

3. Do not use in locations subject to vibration or impact. Confirm the specifications in the main section of this catalog.

4. A protective cover, etc., should be used to shield valves from direct sunlight.

5. Shield valves from radiated heat generated by nearby heat sources.

6. Employ suitable protective measures in locations where there is contact with water droplets, oil or welding spatter, etc.

7. When solenoid valves are mounted in a control panel or are energized for extended periods of time, employ measures to radiate excess heat, so that temperatures remain within the valve specification range.

Maintenance

⚠Warning

1. Perform maintenance procedures as shown in the instruction manual.

If handled improperly, malfunction or damage of machinery or equipment may occur.

2. Equipment removal and supply/exhaust of compressed air

When equipment is removed, first confirm that measures are in place to prevent dropping of work pieces and run-away of equipment, etc. Then cut the supply pressure and power, and exhaust all compressed air from the system using its residual pressure release function.
Furthermore, in the case of 3 position closed center type valves, compressed air will remain between valves and cylinders, and must be exhausted similarly.
When the equipment is to be started again after remounting or replacement, first confirm that measures are in place to prevent lurching of actuators, etc., and then confirm that the equipment is operating normally.

3. Low frequency operation

Valves should be switched at least once every 30 days to prevent malfunction. (Use caution regarding the air supply.)

4. Manual override operation

When the manual override is operated, connected equipment will be actuated. Confirm safety before operating.

⚠Caution

1. Drainage removal

Remove drainage from air filters regularly. (Refer to specifications.)

How to Find the Flow Rate (at air temperature of 20°C)

Subsonic flow when $P_1 + 0.1013 < 1.89\ (P_2 + 0.1013)$

$$Q = 226S\sqrt{\triangle P(P_2 + 0.1013)}$$

Sonic flow when $P_1 + 0.1013 \geq 1.89\ (P_2 + 0.1013)$

$$Q = 113S\ (P_1 + 0.1013)$$

Q : Air flow rate [l/min (ANR)]
S : Effective area (mm^2)
$\triangle P$: Pressure drop ($P_1 - P_2$) [MPa]
P_1: Upstream pressure [MPa]
P_2: Downstream pressure [MPa]

＊ Correction for different air temperatures
Multiply the flow rate calculated with the above formulas by a coefficient from the table below.

Air temperature (°C)	–20	–10	0	10	30	40	50	60
Correction coefficient	1.08	1.06	1.04	1.02	0.98	0.97	0.95	0.94

Series SY3000/5000/7000/9000
Specific Product Precautions 1

Be sure to read before handling.
Refer to pages 230 through 233 for safety instructions and common precautions.

⚠Warning
Manual Override Operation

■ Non-locking push type [Standard type]

Push in the direction of the arrow.

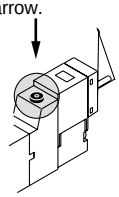

■ Push-turn slotted locking type [type D]

While pressing, turn in the direction of the arrow.
If it is not turned, it can be operated the same way as the non-locking type.

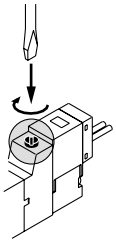

Locked position

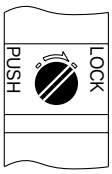

⚠Caution

When operating the locking type D with a screw driver, turn it gently using a watchmakers screw driver.

[Torque: Less than 0.1N·m]

■ Push-turn lever locking type [type E]

While pressing, turn in the direction of the arrow.
If it is not turned, it can be operated the same way as the non-locking type.

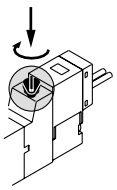

Locked position

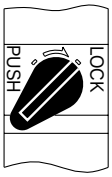

⚠Caution

When locking the manual override on the push-turn locking types (D, E), be sure to push it down before turning.
Turning without first pushing it down can cause damage to the manual override and trouble such as air leakage, etc.

Note) It can also be operated using the manual override on the pilot valve side.
However, the manual override on the pilot valve side is a non-locking push type only, which is operated by pushing it in the direction of the arrow.

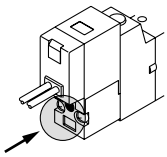

⚠Warning
Solenoid Valves for 200V, 220VAC Specifications

Solenoid valves with grommet and L/M type plug connector AC specifications have a built-in rectifier circuit in the pilot section to operate the DC coil.
With 200V, 220VAC specification pilot valves, this built-in rectifier generates heat when energized. The surface may become hot depending on the energized condition; therefore, do not touch the solenoid valves.

⚠Caution
Exhaust Throttle

With series SY, the pilot valve and main valve share a common exhaust inside the valve. Therefore, do not block the exhaust port when arranging the piping.

⚠Caution
Series SY3000, SY5000, SY7000, SY9000 Used as a 3 Port Valve

Using 5 port valves as 3 port valves

Series SY valves can be used as normally closed (N.C.) or normally open (N.O.) 3 port valves by closing one of the cylinder ports (A or B) with a plug. However, they should be used with the exhaust ports kept open. (Refer to pages 157 through 161 for dedicated 3 port solenoid valves.)

Plug position		B port	A port
Configuration		N.C.	N.O.
Number of solenoids	Single	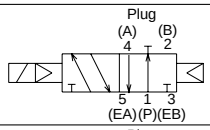	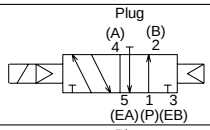
	Double	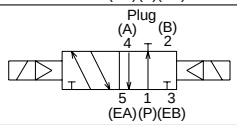	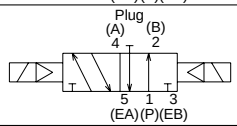

⚠Caution
How to Use Plug Connectors

1. Attaching and detaching connectors

- To attach a connector, hold the lever and connector unit between your fingers and insert straight onto the pins of the solenoid valve so that the lever's pawl is pushed into the groove and locks.
- To detach a connector, remove the pawl from the groove by pushing the lever downward with your thumb, and pull the connector straight out.

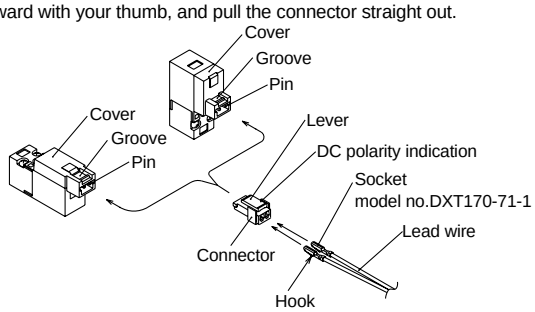

2. Crimping of lead wires and sockets

Strip 3.2 to 3.7mm at the end of the lead wires, insert the ends of the core wires evenly into the sockets, and then crimp with a crimping tool. When this is done, take care that the coverings of the lead wires do not enter the core wire crimping area.
(Crimping tool: Model number DXT170-75-1)

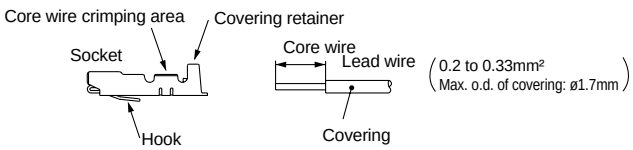

3. Attaching and detaching sockets with lead wires

- **Attaching**
  Insert the sockets into the square holes of the connector (+, – indication), and continue to push the sockets all the way in until they lock by hooking into the seats in the connector. (When they are pushed in, their hooks open and they are locked automatically.) Then confirm that they are locked by pulling lightly on the lead wires.
- **Detaching**
  To detach a socket from a connector, pull out the lead wire while pressing the socket's hook with a stick having a thin tip (about 1mm). If the socket will be used again, first spread the hook outward.

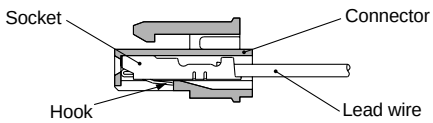

Series SY3000/5000/7000/9000
Specific Product Precautions 2

Be sure to read before handling.
Refer to pages 230 through 233 for safety instructions and common precautions.

⚠Caution

Surge Voltage Suppressor

<For DC>

Grommet, L and M type plug connectors

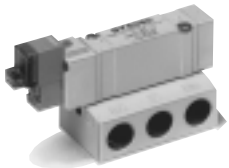

■ **Standard type (with polarity)**

With surge voltage suppressor (□S)

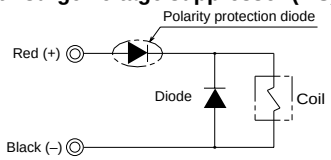

With indicator light/ surge voltage suppressor (□Z)

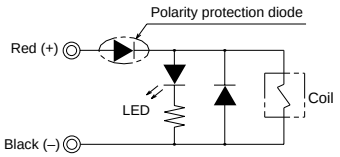

■ **Non-polar type**

With surge voltage suppressor (□R)

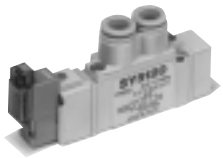

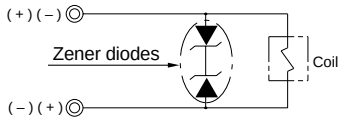

With indicator light/ surge voltage suppressor (□U)

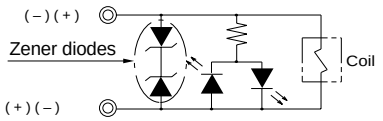

- Connect the standard type in accordance with the +, – polarity indication. (The non-polar type can be used with the connections made either way.)
- Since voltage specifications other than standard 24V and 12V DC do not have diodes for polarity protection, be careful not to make errors in the polarity.
- When wiring is done at the factory, positive (+) is red and negative (–) is black.

DIN terminal

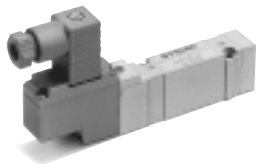

With surge voltage suppressor (DS)

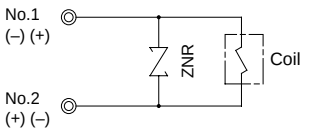

With indicator light/ surge voltage suppressor (DZ)

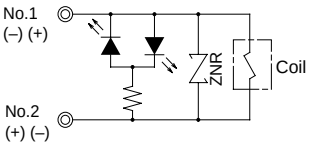

The DIN terminal type does not have polarity.

Plug-in Type

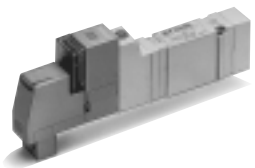

Non-polar type circuit diagram (FU)

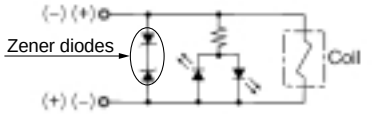

Plug-in valves do not have polarity. Therefore, they can be used for both the positive COM (SS5Y$^{3}_{5}$-45□) and negative COM(SS5Y$^{3}_{5}$-45N□).

<For AC>

(There is no "S" type, because the generation of surge voltage is prevented by a rectifier.)

Grommet, L and M type plug connectors

With indicator light [GZ / LZ, LOZ, MZ, MOZ]

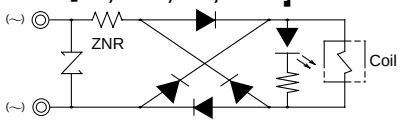

DIN terminal

With indicator light (DZ)

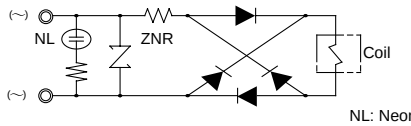

NL: Neon light

Note) Zener diodes and ZNR surge voltage suppressor have residual voltage corresponding to the protective element and rated voltage; therefore, protect the controller side from the surge voltage.
The residual voltage of the diodes is approximately 1V.

⚠Caution

Plug Connector Lead Wire Length

Plug connector lead wires have a standard length of 300mm, however, the following lengths are also available.

Connector assembly part numbers

For DC: **SY100－30－4A－□**

For 100VAC: **SY100－30－1A－□**

For 200VAC: **SY100－30－2A－□**

For other AC: **SY100－30－3A－□**

Without lead wires: **SY100－30－A**

(Connector, socket x 2pcs. only)

● Lead wire length

Nil	300mm
6	600mm
10	1000mm
15	1500mm
20	2000mm
25	2500mm
30	3000mm
50	5000mm

Ordering

Include the connector assembly part number together with the part number for the plug connector's solenoid valve without connector.
<Example> Lead wire length 2000mm

For DC	**For AC**
SY3120-5LO-M5	**SY3120-1LO-M5**
SY100-30-4A-20	**SY100-30-1A-20**

Specific Product Precautions 3

Be sure to read before handling.
Refer to pages 230 through 233 for safety instructions and common precautions.

⚠Caution

How to Use the DIN Terminal Connector

Connection

1. Loosen the holding screw and pull the connector out of the solenoid valve terminal block.
2. After removing the holding screw, insert a flat head screw driver, etc., into the notch on the bottom of the terminal block and pry it open, separating the terminal block and the housing.
3. Loosen the terminal screws (slotted screws) on the terminal block, insert the cores of the lead wires into the terminals according to the connection method, and fasten them securely with the terminal screws.
4. Secure the cord by fastening the ground nut.

⚠Caution

When making connections, take note that using other than the supported size (ø3.5 to ø7) heavy duty cord will not satisfy IP65 (enclosure) standards. Also, be sure to tighten the ground nut and holding screw within their specified torque ranges.

Changing the entry direction

After separating the terminal block and housing, the cord entry can be changed by attaching the housing in the desired direction (4 directions at 90° intervals).
∗ When equipped with a light, be careful not to damage the light with the cord's lead wires.

Precautions

Plug in and pull out the connector vertically without tilting to one side.

Compatible cable

Cord O.D.: ø3.5 to ø7
(Reference) 0.5mm², 2 core or 3 core, equivalent to JIS C 3306

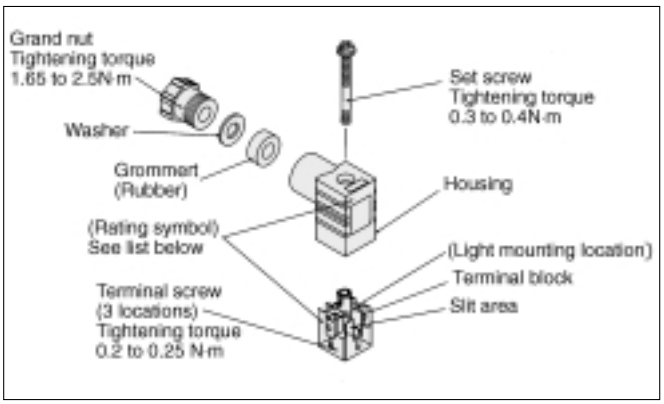

DIN Connector Part Nos.

Without light	SY100-61-1	
With light		
Rated voltage	Rating symbol	Part no.
24VDC	24V	SY100-61-3-05
12VDC	12V	SY100-61-3-06
100VAC	100V	SY100-61-2-01
200VAC	200V	SY100-61-2-02
110VAC	110V	SY100-61-2-03
220VAC	220V	SY100-61-2-04

Circuit diagram with light

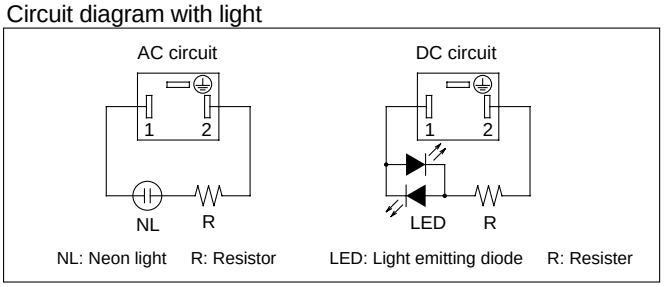

Note) Refer to page 189 for DIN connector conforming to DIN43650C standard.

⚠Caution

Connector Assembly with Cover

Connector assembly with dust proof protective cover

- Effective for prevention of short circuit failure due to the entry of foreign matter into the connector
- Chloroprene rubber for electrical use, which provides outstanding weather resistance and electrical insulation, is used for the cover material. However, do not allow contact with cutting oil, etc.
- Use of a round type cord creates a neat appearance

Part numbers

SY100−68−A −□

Lead wire length (L)

Nil	300mm
6	600mm
10	1000mm
15	1500mm
20	2000mm
25	2500mm
30	3000mm
50	5000mm

Connector assembly with cover/Dimensions

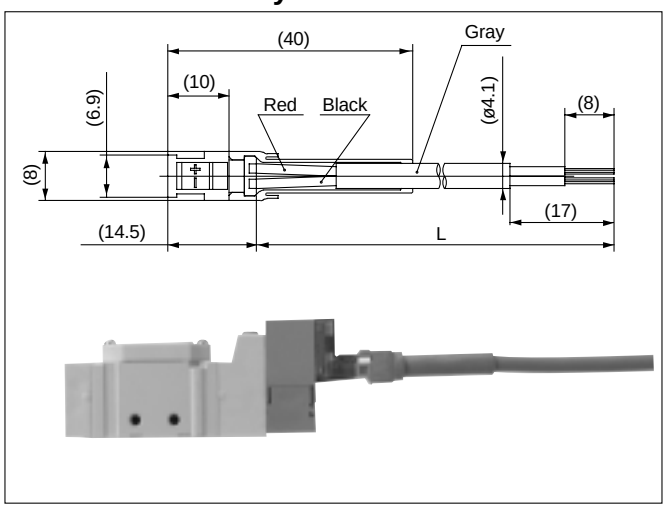

Ordering Examples

Enter the part number for a plug connector solenoid valve without connector together with the part number for a connector assembly with cover.

<Example 1> Lead wire length of 2000mm
SY3120-5LOZ-M5
SY100-68-A-20

<Example 2> Lead wire length of 300mm (standard)
SY3120-5LPZ-M5
Symbol for connector assembly with cover

∗ In this case, the part number for the connector assembly with cover is not required.

Specific Product Precautions 4

Be sure to read before handling.
Refer to pages 230 through 233 for safety instructions and common precautions.

⚠Caution

Plug-in Type

■ When using a double solenoid valve (Dual body type: SY$^{3}_{5}$245-□FU) on the plug-in type manifold (SS5Y$^{3}_{5}$-45 (N)□), two manifold stations are required. Output to A/B ports will be made through the manifold block on the side indicated by an arrow on the top of the solenoid valve. Therefore, arrange the piping on the side indicated by the arrow.
Although the "T" side will not be used, plugs will not be necessary since it is sealed with the valve.
(However, insert a plug into the A/B ports if dust intrusion is possible. Refer to page 118.)

Manifold valve
SS5Y$^{3}_{5}$-45(N)□

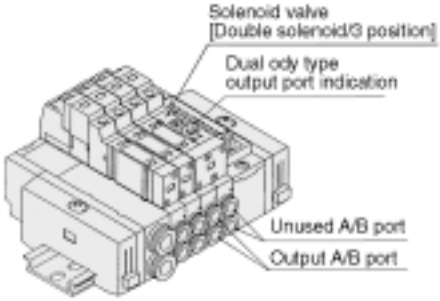

Plug-in type solenoid valves consist of a non-polar solenoid valve and a plug-in socket. When ordering them separately, refer to the following part numbers.

[Single solenoid]

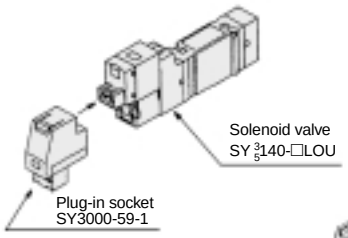

Note) Using a valve other than a non-polar type may cause trouble.

[Double solenoid/3 position]
Dual body type

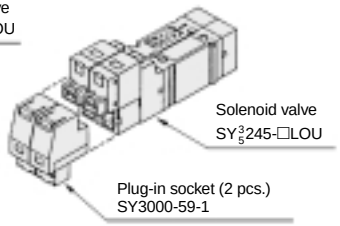

⚠Caution

Series SY9000 DIN Rail

The DIN rail used with series SY9000 is stronger than that used with series SY3000 and SY5000. Use this exclusive DIN rail with series SY9000. Furthermore, if using a DIN rail other than that supplied by SMC, refer to the manifold mounting section below, and mount using the same method as prescribed for side facing and rear facing, regardless of the mounting orientation.

Manifold Mounting

For type 23, 43, 45, and 45□ DIN rail mounting, when attaching a manifold to a mounting surface, etc., with bolts, if the entire bottom surface of the DIN rail contacts the mounting surface in a horizontal mounting, it can be used by simply securing both ends of the DIN rail. However, for any other mounting method or for side facing and rear facing, etc., secure the DIN rail with bolts at uniform intervals using the following as a guide: 2 to 5 stations at 2 locations, 6 to 10 stations at 3 locations, 11 to 15 stations at 4 locations, and 16 to 20 stations at 5 locations. In addition, even in the case of a horizontal mounting, if the mounting surface is subject to vibration, etc., take the same measures indicated above. If secured at fewer than the specified number of locations, warping or twisting may occur in the DIN rail and manifold, causing trouble such as air leakage.

⚠Caution

Precautions for One-touch Fittings

The pitch determined for each of the series SY piping ports (P, A, B, etc.) is based on the assumption that series KJ One-touch fittings will be used. For this reason, other pipe fittings may interfere with each other depending on their type and size. Dimensions should be confirmed in a pipe fitting catalog before they are used.

⚠Caution

Precautions for One-touch Fittings

1. Tube attachment/detachment for One-touch fittings

1) Attaching of tube

1. Take a tube having no flaws on its periphery and cut it off at a right angle. When cutting the tube, use tube cutters TK-1, 2 or 3. Do not use pinchers, nippers or scissors, etc. If cutting is done with tools other than tube cutters, the tube may be cut diagonally or become flattened, etc., making a secure installation impossible, and causing problems such as the tube pulling out after installation or air leakage. Allow some extra length in the tube.
2. Grasp the tube and push it in slowly, inserting it securely all the way into the fitting.
3. After inserting the tube, pull on it lightly to confirm that it will not come out. If it is not installed securely all the way into the fitting, this can cause problems such as air leakage or the tube pulling out.

2) Detaching of tube

1. Push in the release button sufficiently, pushing its collar equally around the circumference.
2. Pull out the tube while holding down the release button so that it does not come out. If the release button is not pressed down sufficiently, there will be increased bite on the tube and it will become more difficult to pull it out.
3. When the removed tube is to be used again, cut off the portion which has been chewed before reusing it. If the chewed portion of the tube is used as is, this can cause trouble such as air leakage or difficulty in removing the tube.

⚠Caution

Precautions on Other Tube Brands

1. When using other than SMC brand tubes, confirm that the following specifications are satisfied with respect to the outside diameter tolerance of the tube.

1) Nylon tube within ±0.1mm
2) Soft nylon tube within ±0.1mm
3) Polyurethane tube within +0.15mm
within –0.2mm

Do not use tubes which do not meet these outside diameter tolerances. It may not be possible to connect them, or they may cause other trouble, such as air leakage or the tube pulling out after connection.

Specific Product Precautions 5

Be sure to read before handling.
Refer to pages 230 through 233 for safety instructions and common precautions.

⚠Caution

Interface Regulators

Specifications

Interface regulator model		ARBY3000-□-P-2	ARBY3000-□-$^{A1}_{B1}$-2		ARBY5000-□-P-2	ARBY5000-□-$^{A1}_{B1}$-2	
Applicable solenoid valve model		SY3[1]40(R)			SY[1]40(R)		
Regulated port		P	A	B	P	A	B
Regulating pressure range		0.1 to 0.7MPa					
Maximum operating pressure		0.7MPa					
Fluid		Air					
Ambient and fluid temperature		Maximum 50°C					
Pressure gauge port size		M5 x 0.8					
Weight	With pressure gauge	46g (with 05), 50g (with 06)			66.8g		
	With plug	20g			60.4g		
Supply side effective area (Cv factor) Note 3)	P to A, B	—	2.45mm² (0.13)		—	7.61mm² (0.42)	
Exhaust side effective area (Cv factor) Note 3)	A, B to EA, EB	4.05mm² (0.22)	3.91mm² (0.21)		11.1mm² (0.61)	10.1mm² (0.56)	

Note 1) Pressurize the interface regulator from P port on the base.

Note 2) With closed center and pressure center valves, the pressure can be regulated through P port only.

Note 3) Effective area, excluding the regulated port, when a primary pressure of 0.5MPa is supplied with regulators mounted on the solenoid valves (2 positions) and sub-plate. Refer to "Flow Characteristics" regarding the regulated port.

Note 4) Values for weight include gasket and mounting screws.

Note 5) With A, B ports regulated (P port controlled A, B ports regulated), the effective area (CV factor) for the regulated port and unregulated passage (P to B or P to A) decreases as shown in the graph below when the set pressure is 0.25MPa or less.

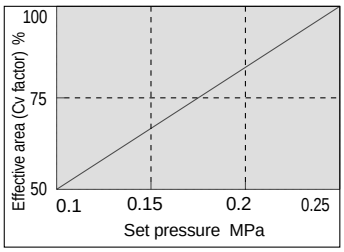

Symbols

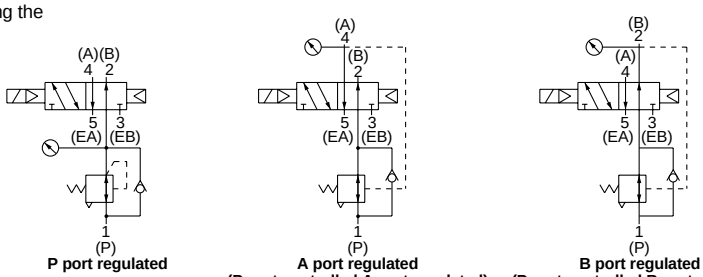

P port regulated | **A port regulated (P port controlled A port regulated)** | **B port regulated (P port controlled B port regulated)**

How to Order Interface Regulators

ARBY3000 — 05 — P — 2

Regulated port

P	P port
A1	A port (P port controlled A port regulated)
B1	B port (P port controlled B port regulated)

Pressure gauge connection port

05	Pressure gauge (G15-10-01) [for odd number stations]
06	Pressure gauge (G15-10-01) [for even number stations]
M1	Plug (M-5P)

Note) For series ARBY3000 with pressure gauge, note that the part numbers for odd number and even number stations differ to prevent interference between the pressure gauges when installing on the manifold.

ARBY5000 — 00 — P — 2

Regulated port

P	P port
A1	A port (P port controlled A port regulated)
B1	B port (P port controlled B port regulated)

Pressure gauge connection port

00	Pressure gauge (G15-10-01)
M1	Plug (M-5P)

Flow Characteristics

(Conditions: Primary pressure of 0.7MPa with 2 position solenoid valves mounted)

ARBY3000 P port regulated (P to A, B)

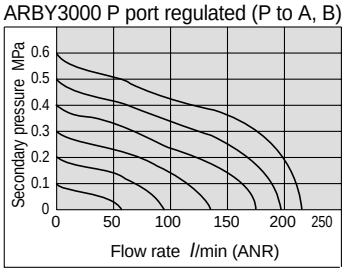

ARBY3000 A1 port regulated (P to A), B1 port regulated (P to B)

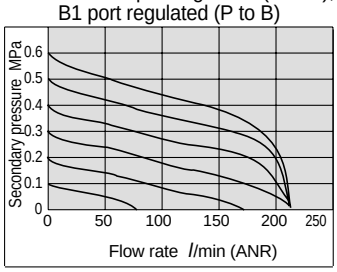

ARBY5000 P port regulated (P to A, B)

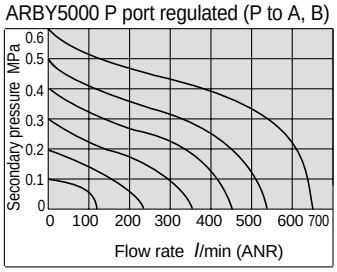

ARBY5000 A1 port regulated (P to A), B1 port regulated (P to B)

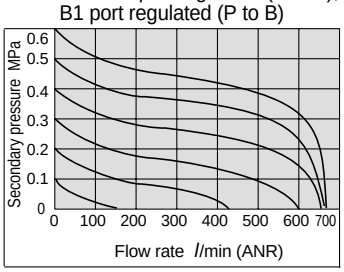

SMC'S GLOBAL MANUFACTURING, DISTRIBUTION AND SERVICE NETWORK

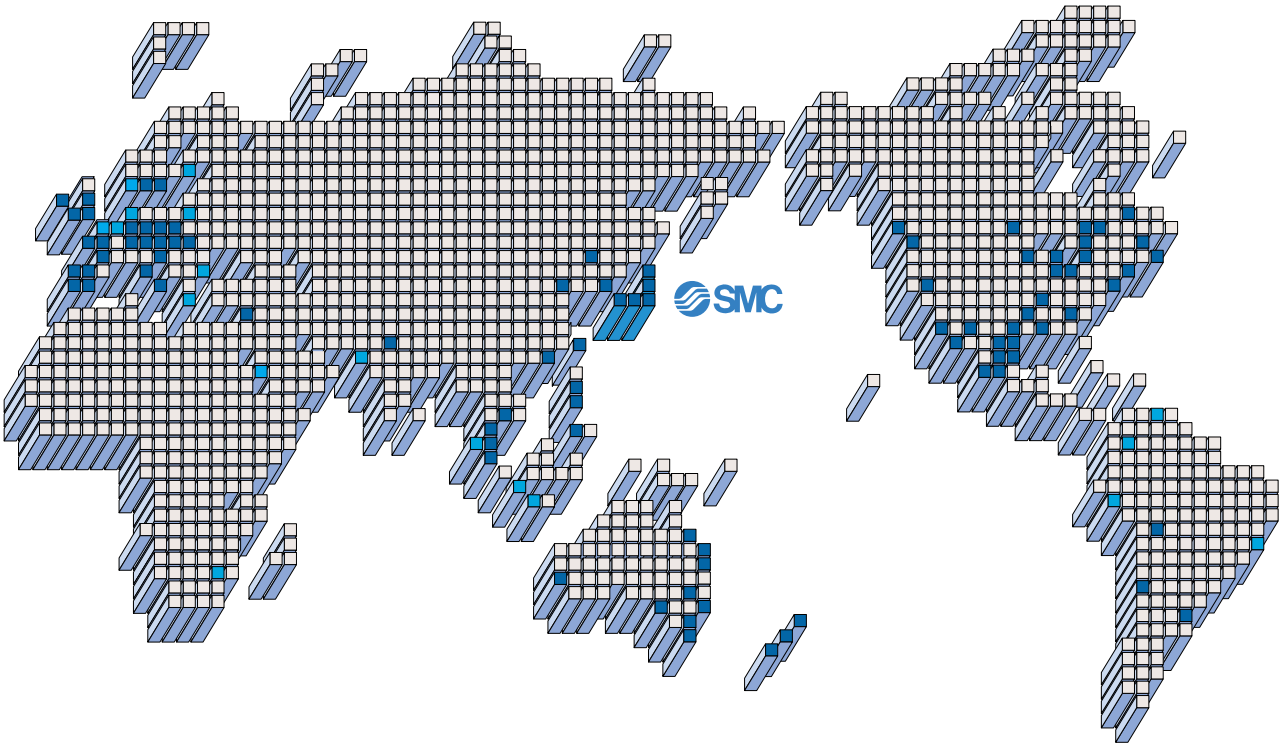

EUROPE

AUSTRIA
SMC Pneumatik GmbH

CZECH
SMC Czech s.r.o.

DENMARK
SMC Pneumatik A/S

FINLAND
SMC Pneumatiikka OY

FRANCE
SMC Pneumatique SA

GERMANY
SMC Pneumatik GmbH

HUNGARY
SMC Hungary Kft.

IRELAND
SMC Pneumatics (Ireland) Ltd.

ITALY
SMC Italia S.p.A.

NETHERLANDS
SMC Pnuematics BV.

NORWAY
SMC Pneumatics Norway A/S

POLAND
SMC Industrial Automation Polska Sp.z.o.o.

ROMANIA
SMC Romania s.r.l.

RUSSIA
SMC Pneumatik LLC.

SLOVAKIA
SMC Slovakia s.r.o.

EUROPE

SLOVENIA
SMC Slovenia d.o.o.

SPAIN/PORTUGAL
SMC España, S.A.

SWEDEN
SMC Pneumatics Sweden AB

SWITZERLAND
SMC Pneumatik AG.

UK
SMC Pneumatics (U.K.) Ltd.

ASIA

CHINA
SMC (China) Co., Ltd.

HONG KONG
SMC Pneumatics (Hong Kong) Ltd.

INDIA
SMC Pneumatics (India) Pvt. Ltd.

MALAYSIA
SMC Pneumatics (S.E.A.) Sdn. Bhd.

PHILIPPINES
SMC Pneumatics (Philippines), Inc.

SINGAPORE
SMC Pneumatics (S.E.A.) Pte. Ltd.

SOUTH KOREA
SMC Pneumatics Korea Co., Ltd.

TAIWAN
SMC Pneumatics (Taiwan) Co., Ltd.

THAILAND
SMC Thailand Ltd.

NORTH AMERICA

CANADA
SMC Pneumatics (Canada) Ltd.

MEXICO
SMC Corporation (Mexico) S.A. de C.V.

USA
SMC Corporation of America

SOUTH AMERICA

ARGENTINA
SMC Argentina S.A.

BOLIVIA
SMC Pneumatics Bolivia S.R.L.

BRAZIL
SMC Pneumaticos Do Brazil Ltda.

CHILE
SMC Pneumatics (Chile) S.A.

VENEZUELA
SMC Neumatica Venezuela S.A.

OCEANIA

AUSTRALIA
SMC Pneumatics (Australia) Pty. Ltd.

NEW ZEALAND
SMC Pneumatics (N.Z.) Ltd.

SMC CORPORATION

1-16-4 Shimbashi, Minato-ku, Tokyo 105-0004, JAPAN
Tel: 03-3502-2740 Fax: 03-3508-2480
URL http://www.smcworld.com

© 2001 SMC CORPORATION All Rights Reserved

1st printing March, 1995 D-TT P-100 (M)
3rd printing February, 2001 D-SMC.L.A. P-80 (D)

Printed in Japan.

All specifications in this catalog are subject to change without notice.
This catalog is printed on recycled paper with concern for the global environment.